THE CITY OF WINNIPEG

BY-LAW NO. 132/2022

A By-law of THE CITY OF WINNIPEG to approve a plan of subdivision and amend Winnipeg Zoning By-law No. 200/2006 to rezone land located at 230 University Crescent in the Assiniboia Community pursuant to Development Application No. DASZ 15/2022.

THE CITY OF WINNIPEG, in Council assembled, enacts as follows:

Plan of subdivision

1 The plan of subdivision shown below is approved, subject to a Development Agreement being entered into between The City of Winnipeg and the registered owner or persons entitled to be registered owner of the subject land.

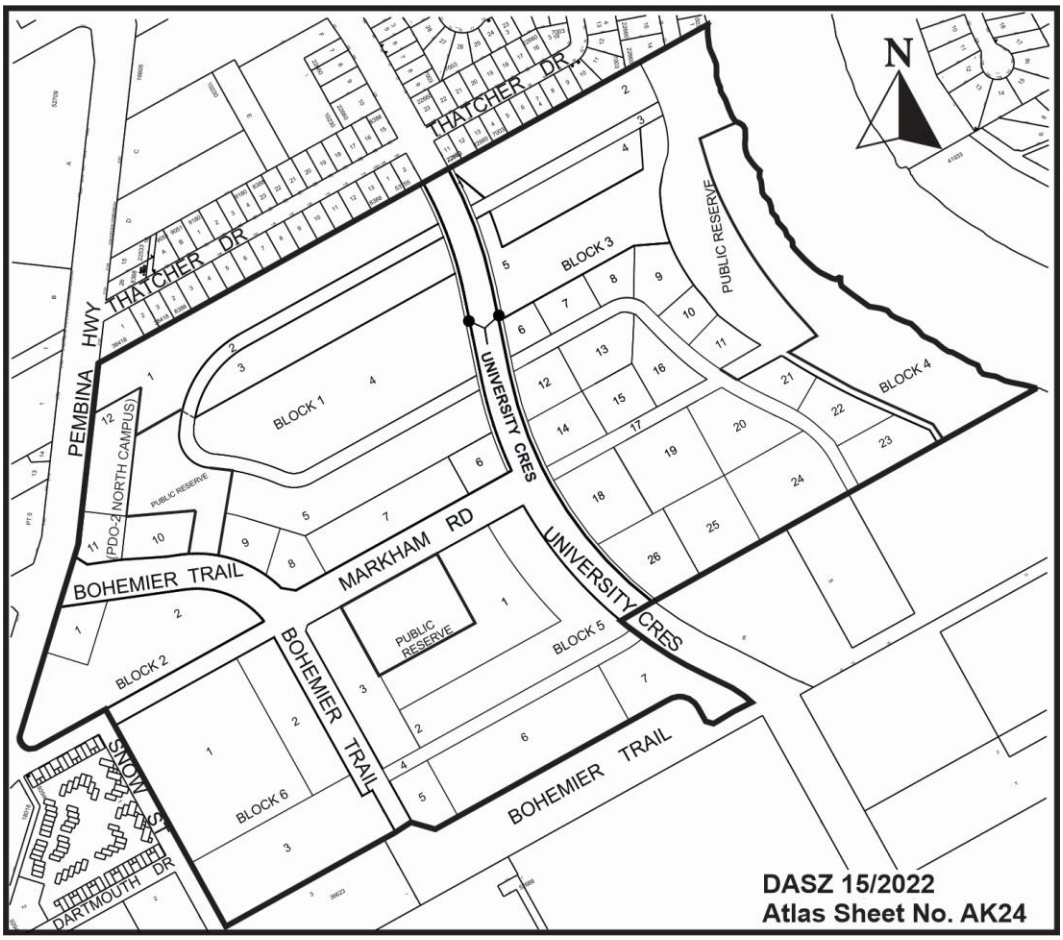

Zoning

2 The Winnipeg Zoning By-law No. 200/2006 is amended by:

(a) adding the document attached as Appendix A to this by-law and entitled "North Campus Planned Development Overlay 2 (PDO-2 North Campus) as Schedule Z; and

(b) adding the following in Schedule B:

2(688) Notwithstanding anything elsewhere contained in this By-law or shown on the Zoning Maps, the lands designated on the plan below as "RMU (PDO-2 North Campus)", "RMF-S (PDO-2 North Campus)", "PR1 (PDO-2 North Campus)" are hereby zoned as:

- *an "RMU" Residential Mixed-Use (North Campus Plan Development Overlay 2) District;*
- *an "RMF-S" Residential Multi-Family (Small) (North Campus Plan Development Overlay 2) District; and*
- *a "PR1" Parks and Recreation 1 (Neighbourhood) (North Campus Plan Development Overlay 2) District*

respectively, the zoning districts and zoning district boundaries are hereby located as shown on that plan, and the Zoning Maps shall hereafter be read and construed as shown on that plan, subject to a Zoning Agreement being entered into between The City of Winnipeg and the registered owner or persons entitled to be registered owner of the subject land.

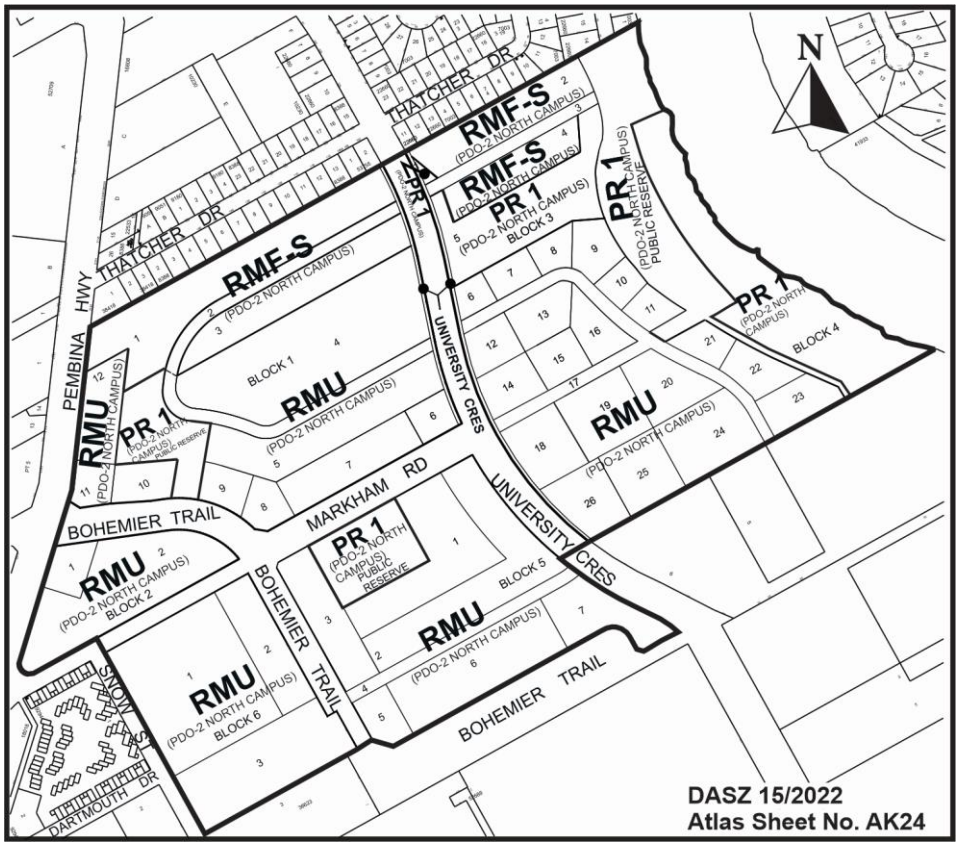

Coming into force

3 This By-law comes into force when the plan of subdivision and the Zoning Agreement are registered at the Winnipeg Land Titles Office.

Extensions of time

4(1) Subject to subsection (2), this By-law will expire without coming into force one year after the date on which this By-law is enacted if:

(a) the plan of subdivision and the Zoning Agreement have not been registered at the Winnipeg Land Titles Office; and

(b) the owner has not applied for an extension of time.

4(2) This By-law will be deemed to have expired without coming into force on the date provided in subsection (1) when

(a) the owner has applied for an extension of time prior to the date provided in subsection (1); and

(b) Council denies the extension of time.

RECEIVED FIRST READING on the 22nd day of September, 2022;

RECEIVED SECOND READING on the 29th day of September, 2023;

RECEIVED THIRD READING AND PASSED on the 29th day of September, 2023;

DONE AND PASSED, in Council assembled, this 29th day of September, 2023.

APPENDIX A

NORTH CAMPUS PLANNED DEVELOPMENT OVERLAY 2 (PDO-2 NORTH CAMPUS)

Purpose

1. The purpose of this overlay is to support the development of the North Campus lands as a Major Redevelopment Site and implement the policies of the North Campus Secondary Plan.

Applicability

2. The PDO-2 North Campus overlay district shall apply to all lands as shown on the attached Map 1.

Development Standards

3. Except to the extent modified by the standards in this overlay, all standards of this By-law apply within the boundaries shown on Map 1.

Alternative Development Patterns

4. For developments with alternative configurations, such as those featuring multiple principal buildings that do not all have frontage on a public street or private access road, the yards classified as front, rear, and side or corner side shall be determined by the Director in order to establish where required setbacks shall apply. The Director shall consider the orientation of the principal building or buildings, pedestrian and vehicular access, site conditions, views from the public right-of-way, and established development patterns of adjacent properties when determining the yards.

Parking and Loading

5. Parking and Loading Management Plan

   (1) A property owner may propose to the Director a Parking and Loading Management Plan prepared by a professional traffic engineer or parking consultant documenting that a reduced amount of off-street parking and/or loading is adequate to meet the needs of the proposed use or combination of uses and to prevent traffic and parking congestion on surrounding streets and/or public lanes.

   (2) If the Director concludes that the proposed Parking and Loading Management Plan will provide off-street parking and/or loading adequate to meet the needs of the proposed use or combination of uses and to prevent traffic or parking congestion on surrounding streets and/or public lanes, the Director may approve the Parking and Loading Management Plan and may reduce the amount of required off-street parking and/or loading required to conform with the approved plan.

   (3) Once a Parking and Loading Management Plan is approved by the Director, the applicable owner shall provide parking spaces and loading spaces in accordance with the requirements of the approved Parking and Loading Management Plan.

(4) Any owner or authorized lessee of land in the PDO-2 North Campus overlay district may, in accordance with this overlay and this By-law, submit to the Director for approval:

(a) A Parking and Loading Management Plan for the overlay district; or,

(b) An amended Parking and Loading Management Plan for the overlay district.

6. Parking Requirements in Proximity to Rapid Transit

(1) Within Area 1 of the PDO-2 North Campus overlay district, the parking spaces required under Table 5-9 of this By-law shall be the maximum amount of accessory parking permitted for a proposed development. The minimum accessory parking requirement shall be 50% of the amounts shown in Table 5-9 of this By-law. Further reductions to the minimum number of required parking spaces within Area 1 may be considered in accordance with clause (1) of section 5 above, subject to the Director's approval of a Parking and Loading Management Plan. Parking reductions do not apply to required bicycle parking.

Area 1

7. PDO-2 North Campus Area 1 (consisting of Areas 1A and 1B)

Applicability

(1) PDO-2 North Campus Areas 1A and 1B are shown on Map 1 as Area 1A and Area 1B respectively.

Intent

(2) In accordance with the North Campus Lands Secondary Plan, to accommodate:

(a) A high density district with a compact development form and taller buildings that are designed with consideration for site conditions and the surrounding context;

(b) A variety of parks, pathways, and public spaces that support year-round activities;

(c) A mixture of residential, commercial, institutional, recreational, and cultural uses; and,

(d) A pedestrian friendly public realm with minimal setbacks and activated street edges.

Prohibited Use Regulations

(3) Notwithstanding other provisions of this By-law, in PDO-2 North Campus Area 1, the following uses shall be prohibited and not allowed as principal, conditional, accessory, or temporary uses:

(a) Dwelling, single-family detached

(b) Dwelling, two-family

Permitted Use Regulations

(4) Notwithstanding other provisions of this By-law, in PDO-2 North Campus Area 1, the following principal uses shall be permitted in addition to the permitted and conditional uses of the underlying RMU zoning district:

(a) Amusement enterprise, indoor

(b) Auditorium / concert hall / theatre / cinema

(c) College or university

(d) Cultural centre

(e) Dormitory

(f) Drinking establishment

(g) Hotel or motel

(h) Private club, not licensed

(i) Supermarket

(j) Transit station

Conditional Use Regulations

(5) Notwithstanding other provisions of this By-law, in PDO-2 North Campus Area 1, the following principal uses shall be conditional in addition to the permitted and conditional uses of the underlying RMU zoning district:

(a) Amusement enterprise, outdoor

(b) Craft brewery, distillery or winery

(c) Parking, structured

(d) Research institution

(e) Studio, radio / tv / motion picture broadcast and production

Accessory Use Regulations

(6) Notwithstanding other provisions of this By-law, in PDO-2 North Campus Area 1, the following accessory uses shall be permitted in addition to the permitted and conditional uses of the underlying RMU zoning district:

(a) Hall rental

(b) Micro brewery / distillery / winery

(c) Outdoor dining / drinking area

(d) Parking, shared

(e) Social service facility

Use Specific Standards

(7) Regardless of whether a use is allowed as a permitted or conditional use in PDO-2 North Campus Area 1, the following additional standards must be met in respect of the uses identified, except as authorized by other sections of this By-law or by a conditional use or variance order:

(a) Drinking establishment:

(i) Drinking establishments are limited to a maximum of 5,000 square feet of gross floor area.

(b) Medical / dental / optical / counselling clinic:

(i) Medical / dental / optical / counselling clinics shall not be subject to a maximum gross floor area requirement.

(c) Museum:

(i) Museums shall not be subject to a maximum gross floor area requirement.

(d) Office:

(i) Offices shall not be subject to a maximum gross floor area requirement.

(e) Personal services:

(i) Personal services are limited to a maximum of 25,000 square feet of gross floor area; and,

(ii) Personal services shall not be subject to limited hours of operation by this By-law.

(f) Post office / carrier depot:

(i) Post office / carrier depots are limited to a maximum of 1,500 square feet of gross floor area.

(g) Restaurants:

(i) Restaurants are not subject to a maximum gross floor area requirement; and,

(ii) Restaurants shall not be permitted to have a drive-in or drive-through facility.

(h) Retail sales:

(i) Retail sales are limited to a maximum of 40,000 square feet of gross floor area; and,

(ii) Retail sales shall not be subject to limited hours of operation by this By-law.

(i) Supermarket:

(i) Supermarkets are limited to a maximum of 55,000 square feet of gross floor area.

Dimensional Standards

(8) Notwithstanding other provisions of this By-law, in PDO-2 North Campus Area 1, development must comply with the dimensional standards listed in this subsection.

(a) Height of Buildings:

(i) In Area 1 the minimum height of a principal building is 35 feet;

(ii) In Area 1A the maximum height of a principal building is 250 feet; and,

(iii) In Area 1B the maximum height of a principal building is 92 feet.

(b) Yard Requirements:

(i) In Area 1 the minimum front yard is 0 feet;

(ii) The maximum front yard is 10 feet;

(iii) The minimum interior side yard is 0 feet;

(iv) The minimum corner side yard is 0 feet;

(v) The maximum corner side yard is 10 feet; and,

(vi) The minimum rear yard is 20 feet.

(c) Development Density:

(i) In Area 1A the minimum lot area per dwelling unit is 200 square feet; and,

(ii) In Area 1B the minimum lot area per dwelling unit is 300 square feet.

(d) Additional Standards:

(i) Notwithstanding clauses (ii) and (v) under subsection (8)(b) above, up to 50% of the length of the ground floor façade of any building, up to a maximum continuous length of 25 feet, may have a maximum front yard or corner side yard of 20 feet for the purpose of accommodating an otherwise approved public space, plaza, outdoor dining / drinking area, or other pedestrian amenity.

(ii) Notwithstanding clause (iii) under subsection (8)(b) above, for all principal buildings that feature a residential use and are not greater than 50 feet in height, an interior side yard of 10 feet must be provided for the portion of the building containing such uses. For all principal buildings containing a residential use above 50 feet in height, an interior side yard of 20 feet must be provided for the portion of the building containing such uses. These minimum side yards must also be provided when a building containing non-residential uses is proposed on a lot abutting an existing or proposed residential use.

(iii) Notwithstanding other provisions of this By-law, for principal buildings located on the same site, no minimum principal building separation is required when no windows, doors, or other openings are provided in the wall facing the adjacent property, and no such openings are provided in the abutting property wall.

Design Standards

(9) Notwithstanding other provisions of this By-law, in PDO-2 North Campus Area 1, development must comply with the design standards established in this section.

(a) Building form:

(i) All buildings shall be stepped back above the fourth storey a minimum of 10 feet, as shown in Illustration 1 below, from the portion or portions of the building fronting a public right-of-way, park, plaza, and/or public open space unless, as determined by the Director, a sufficient alternative design approach is used to mitigate potential negative impacts imposed by the building on such areas.

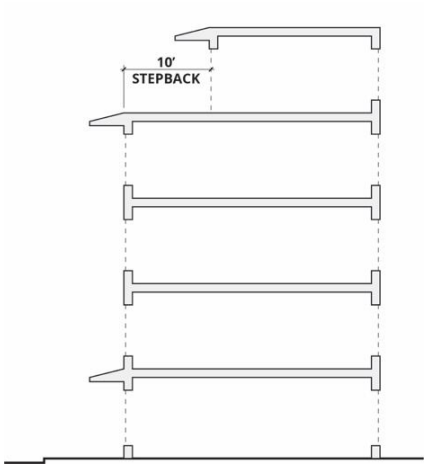

Illustration 1: Fourth Storey Stepback

(ii) For a proposed building exceeding 100 feet in height, the proponent shall be required to provide a sun/shadow and wind study submitted with the seal of a certified and qualified professional as part of their application for plan approval, which must illustrate and evaluate the potential impact of the proposed building on any affected public right-of-way, park, plaza, and/or public open space.

(iii) Further to clause (i) and clause (ii) of this subsection, based on the findings of a sun/shadow and wind study, proposed buildings exceeding 100 feet in height may be required to include additional step backs and/or design modifications to mitigate potential impacts on a public right-of-way, park, plaza, and/or public open space, as determined by the Director.

(b) Building facades:

(i) For non-residential uses, at least 30% of the ground floor façade of a building facing a street must consist of unobscured windows, doors, or display areas.

(c) Building entrances:

(i) All buildings must provide a main entrance on the façade of the building nearest to and facing a street with a direct pedestrian connection.

Signage

(10) Notwithstanding other provisions of this By-law, in PDO-2 North Campus Area 1, development must comply with the signage standards established in this subsection.

(a) Freestanding signs shall not exceed 6 feet in height.

(b) The total surface area of signs attached to a building shall not exceed 25% of the applicable building wall.

Area 2

8. PDO-2 North Campus Area 2

Applicability

(1) PDO-2 North Campus Area 2 is shown on Map 1 as Area 2.

Intent

(2) In accordance with the North Campus Lands Secondary Plan, to accommodate:

(a) A medium density district that is predominantly residential in character and provides a transition between Area 1 lands to the south and Area 3 lands to the north;

(b) A variety of housing types, in addition to limited small-scale commercial, institutional, and service based uses that support campus activities and community needs; and,

(c) A variety of parks, pathways, and public spaces that support year-round activities.

Prohibited Use Regulations

(3) Notwithstanding other provisions of this By-law, in Area 2 of the PDO-2 North Campus overlay district, the following uses shall be prohibited and not allowed as principal, conditional, accessory, or temporary uses:

(a) Dwelling, single-family detached

(b) Dwelling, two-family

Permitted Use Regulations

(4) Notwithstanding other provisions of this By-law, in Area 2 of the PDO-2 North Campus overlay district, the following principal uses shall be permitted in addition to the permitted and conditional uses of the underlying RMU zoning district:

(a) Cultural Centre

(b) Dormitory

Conditional Use Regulations

(5) Notwithstanding other provisions of this By-law, in Area 2 of the PDO-2 North Campus overlay district, the following principal uses shall be conditional in addition to the permitted and conditional uses of the underlying RMU zoning district:

(a) Amusement enterprise, indoor

(b) Hostel

(c) Post office / carrier depot

(d) Private club, not licensed

(e) Social service facility

Accessory Use Regulations

(6) Notwithstanding other provisions of this By-law, in Area 1 of the PDO-2 North Campus overlay district, the following accessory uses shall be permitted in addition to the permitted and conditional uses of the underlying RMU zoning district:

(a) Parking, shared

Use Specific Standards

(7) Regardless of whether a use is allowed as a permitted or conditional use in PDO-2 North Campus Area 2, the following additional standards must be met in respect of the uses identified, except as authorized by other sections of this By-law or by a conditional use or variance order:

(a) Amusement enterprise, indoor:

(i) Indoor amusement enterprises are limited to a maximum of 10,000 square feet of gross floor area.

(b) Drinking establishment:

(i) Drinking establishments are limited to a maximum of 2,500 square feet of gross floor area.

(c) Outdoor dining / drinking area:

(i) Outdoor dining and drinking areas are limited to 1,000 square feet when located between the front façade of the building and the front property line, but when located elsewhere, are limited to 100 square feet.

Dimensional Standards

(8) Notwithstanding other provisions of this By-law, in PDO-2 North Campus Area 2, development must comply with the dimensional standards listed in this subsection.

(a) Height of Buildings:

(i) In Area 2 the maximum height of a principal building is 92 feet.

(b) Yard Requirements:

(i) In Area 2 the minimum front yard is 0 feet;

(ii) The maximum front yard is 20 feet;

(iii) The minimum corner side yard is 0 feet; and,

(iv) The maximum corner side yard is 20 feet.

(c) Development Density:

(i) In Area 2 the minimum lot area per dwelling unit is 400 square feet.

Design Standards

(9) Notwithstanding other provisions of this By-law, in PDO-2 North Campus Area 2, development must comply with the design standards established in this subsection.

(a) Building form:

(i) All buildings shall be stepped back above the third storey a minimum of 10 feet, as shown in Illustration 2 below, from the portion or portions of the building fronting a public right-of-way, park, plaza, and/or public open space unless, as determined by the Director, a sufficient alternative design approach is used to mitigate potential negative impacts imposed by the building on such areas.

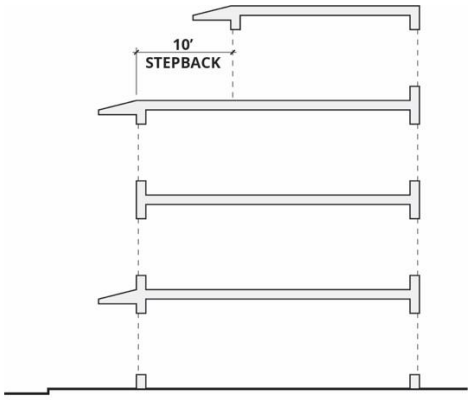

Illustration 2: Third Storey Stepback

Signage

(10) Notwithstanding other provisions of this By-law, in PDO-2 North Campus Area 2, development must comply with the signage standards established in this subsection.

(a) Freestanding signs shall not exceed 6 feet in height.

Area 3

9. PDO-2 North Campus Area 3

Applicability

(1) PDO-2 North Campus Area 3 is shown on Map 1 as Area 3.

Intent

(2) In accordance with the North Campus Lands Secondary Plan, to accommodate:

(a) A lower density district that is predominantly residential in character and provides a transition between Area 2 lands to the south and existing residential to the north;

(b) A range of housing types in the form of multi-unit, low rise developments, in addition to community and recreational uses to support the everyday needs of residents; and,

(c) A variety of parks, pathways, and public spaces that support year-round activities.

Prohibited Use Regulations

(3) Notwithstanding other provisions of this By-law, in Area 3 of the PDO-2 North Campus overlay district, the following uses shall be prohibited and not allowed as principal, conditional, accessory, or temporary uses:

(a) Dwelling, single-family detached

(b) Dwelling, two-family

Accessory Use Regulations

(4) Notwithstanding other provisions of this By-law, in Area 3 of the PDO-2 North Campus overlay district, the following accessory uses shall be permitted in addition to the permitted and conditional uses of the underlying RMF-S zoning district:

(a) Parking, shared

Dimensional Standards

(5) Notwithstanding other provisions of this By-law, in PDO-2 North Campus Area 3, development must comply with the dimensional standards listed in this subsection.

(a) Building Heights:

(i) In Area 3 the maximum height of a principal building is 49 feet.

Design Standards

(6) Notwithstanding other provisions of this By-law, in PDO-2 North Campus Area 3, development must comply with the design standards established in this subsection.

(a) Building form:

(i) When abutting a property that features an existing single-unit dwelling, all buildings shall be limited to a maximum height of 35 feet, or must fall within a 45 degree angular plane from the shared lot line of the applicable property.

Signage

(7) Notwithstanding other provisions of this By-law, in PDO-2 North Campus Area 3, development must comply with the signage standards established in this subsection, measured from a starting point of 6 feet above grade.

(a) Freestanding signs shall not exceed 6 feet in height.

MAP 1: NORTH CAMPUS OVERLAY MAP

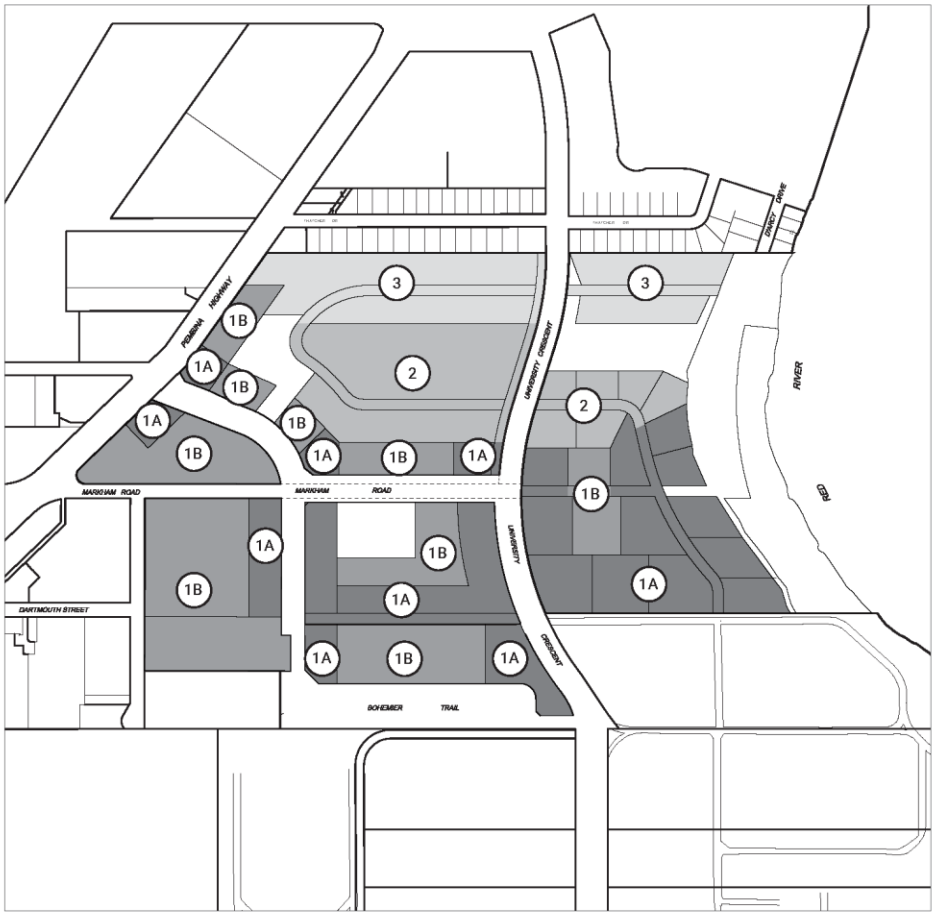

AREA 1A (based on RMU) — 1A
AREA 1B (based on RMU) — 1B
AREA 2 (based on RMU) — 2
AREA 3 (based on RMF-S) — 3

N 0 50 100 200 300M