

PAGE 1 OF 13

THIS IS EXHIBIT " " REFERRED TO
IN FILE NO. DASZ 16/2005
DATED THIS ___ DAY OF ____ 20__

_____
CLERK

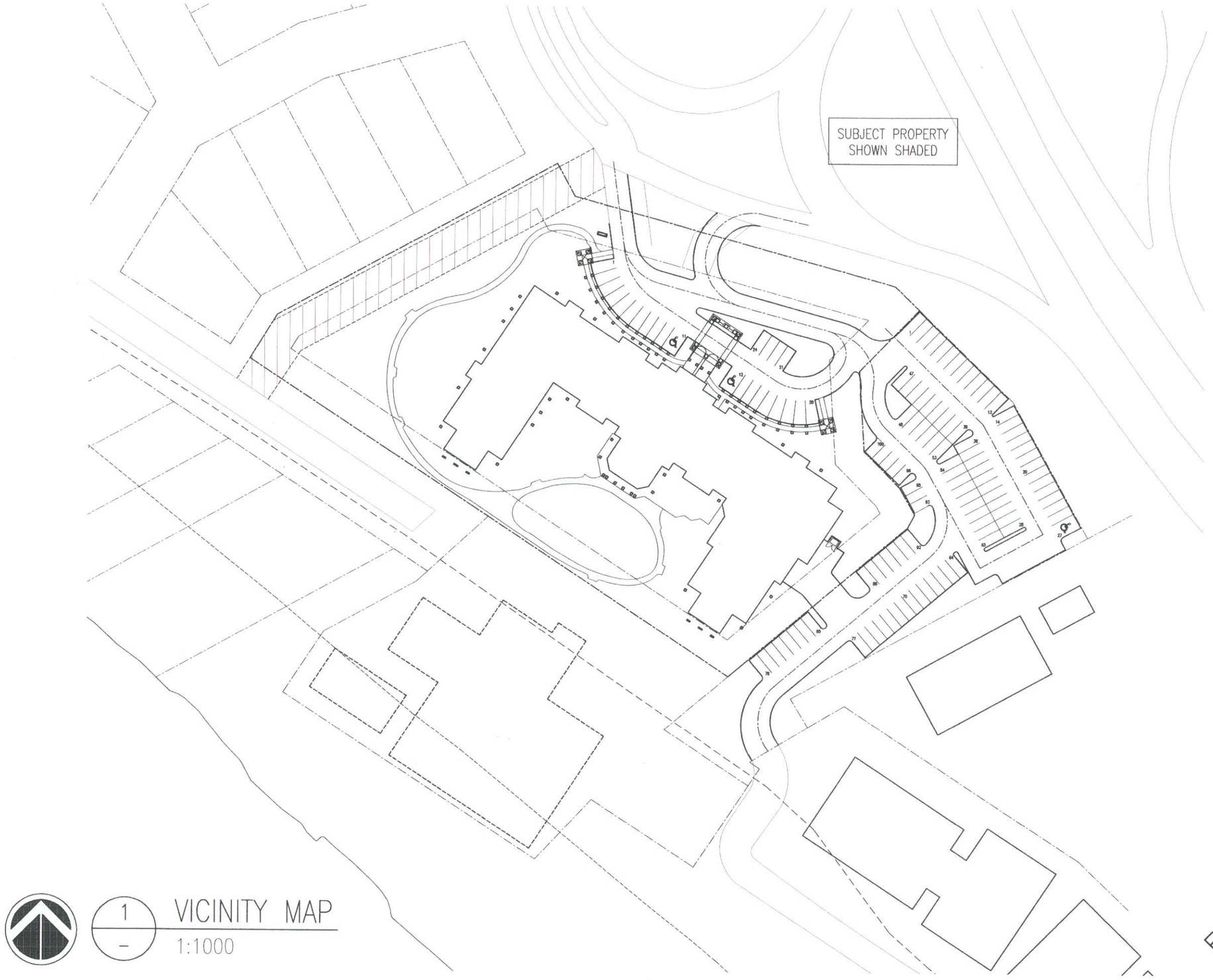

1 VICINITY MAP
1:1000

PRELIMINARY
NOT FOR CONSTRUCTION
PLOTTED DATE: MARCH 23, 2005

CALEB
GROUP OF COMPANIES

PROJECT NO. S-26-2004
DRAWING NO. P-1

DATE 05/03/23
SCALE 1:1000
DRAWN JMU
CHECKED JLW

PROJECT TITLE
CALEB MANOR
WINNIPEG, MB

DRAWING TITLE
VICINITY MAP

SAUNDERS EVANS
ARCHITECTS INC.
204-2100 Airport Drive, Saskatoon
Saskatchewan, S7L 6M6, Canada
Ph: (306) 652-6457 F: (306) 652-6459
E-Mail: saskatoon@saundersevans.com
2230 Lorne Street, Regina
Saskatchewan, S4P 2M7, Canada
Ph: (306) 569-2255 F: (306) 359-6846
E-Mail: regina@saundersevans.com

PAGE [illegible]

THIS IS EXHIBIT [illegible] REFERRED TO
IN FILE NO. [illegible]
DATED THIS ____ DAY OF ____ 20__

CLERK

TOTAL SITE AREA = 12129.6m² or 3.0acres

*SITE DIMENSIONS ARE BASED ON INFORMATION PROVIDED BY CITY OF WINNIPEG

KEYNOTES ⟨#⟩	
#	NOTE
1	EXISTING GOLF COURSE BUILDING
2	EXISTING CANOE CLUB BUILDING (TO BE REMOVED)
3	EXISTING CHAIN LINK FENCE TO REMAIN
4	PROPOSED WOOD PERGOLA AND GAZEBO – SEE RENDERING
5	PROPOSED CONCRETE WALKWAY
6	PROPOSED ASPHALT PARKING LOT
7	PROPOSED DROP OFF ZONE
8	PROPOSED GARBAGE ENCLOSURE – SEE 2/P-3
9	PROPOSED LOADING AREA
10	PROPOSED LANDSCAPED AMENITY AREA
11	PROPOSED LIGHTING TO BE PROVIDED UNDER CANOPY, AWNINGS, TRELLIS AND GAZEBO
12	PROPOSED SIGN – SEE 1/P-3
13	PROPOSED PATIO
14	PROPOSED ASPHALT PATH

PROPOSED FOUR STOREY SENIORS' RESIDENCE (120 UNITS) FOOTPRINT AREA = 2958.7sq.m.

PROP. LINE ±80.123m
PROP. LINE ±9.44.5m
PROP. LINE ±13.085m
PROP. LINE ±84.222m
PROP. LINE ±8.59m
PROP. LINE ±21.62m
PROP. LINE ±33.11m
PROP. LINE ±20.4m
PROP. LINE ±12.8m
PROP. LINE ±7.9m
PROP. LINE ±3.68m
PROP. LINE ±59.1m
PROP. LINE ±85.3m
PROP. LINE ±39.319m
PROP. LINE ±145.15m
PROP. LINE ±20.98m
SETBACK A
SETBACK B
SETBACK C
SETBACK D
10m EASEMENT
FLOODWAY LINE
FLOODWAY FRINGE LINE

1 PROPOSED SITE PLAN
1:600

PRELIMINARY NOT FOR CONSTRUCTION
PLOTTED DATE: MARCH 23, 2005

CALEB GROUP OF COMPANIES

PROJECT NO.	S-26-2004
DRAWING NO.	P-2
DATE	05/03/23
SCALE	1:600
DRAWN	JMU
CHECKED	JLW

CURRENT ZONE: PR2
FUTURE ZONE: RM-3

APPROXIMATE COMPLETION TIME IS ESTIMATED AT 18 MONTHS FROM START OF CONSTRUCTION

PROJECT TITLE
CALEB MANOR
WINNIPEG, MB

DRAWING TITLE
PROPOSED SITE PLAN

SAUNDERS EVANS ARCHITECTS INC.
204-2100 Airport Drive, Saskatoon
Saskatchewan, S7L 6M6, Canada
Ph: (306) 652-6457 F: (306) 652-6459
E-Mail: saskatoon@saundersevans.com
2230 Lorne Street, Regina
Saskatchewan, S4P 2M7, Canada
Ph: (306) 569-2255 F: (306) 359-6846
E-Mail: regina@saundersevans.com

PAGE 3 of 4

THIS IS EXHIBIT "A" REFERRED TO IN FILE NO. DASZ 16/2005
DATED THIS ____DAY OF ____20___

CLERK

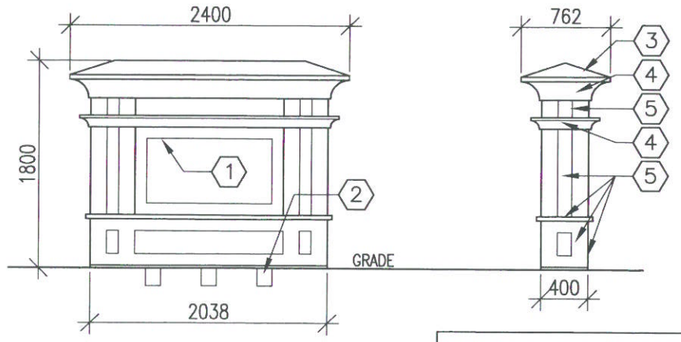

1 — SIGN ELEVATION
1:50

NOTE: SIGN TO COMPLY WITH TABLE 1250(1)/ARTICLE 1220 CITY OF WINNIPEG ZONING BY-LAW No. 6400/94

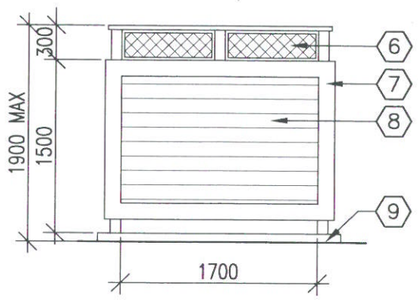

SIDE ELEVATION
1:50

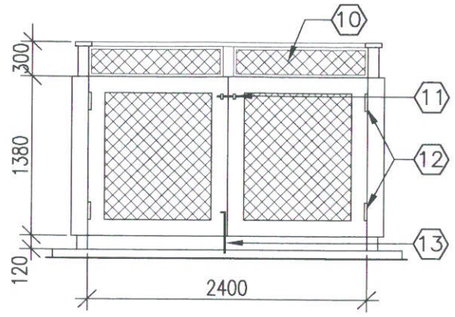

FRONT ELEVATION
1:50

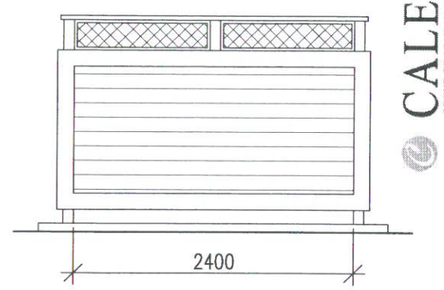

BACK ELEVATION
1:50

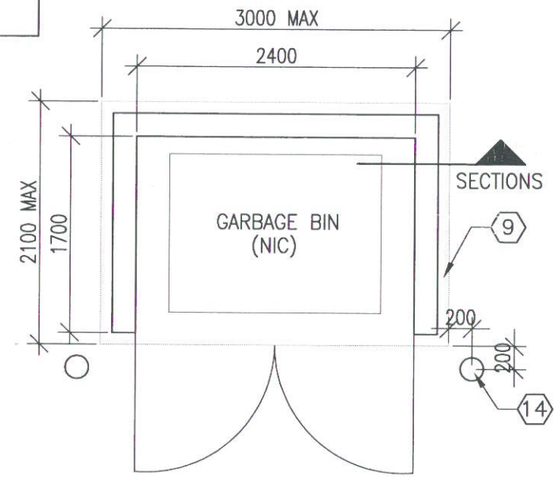

PLAN
1:50

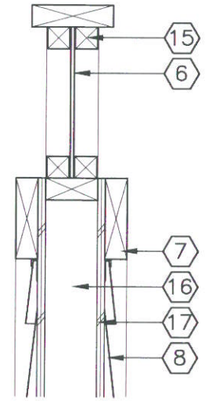

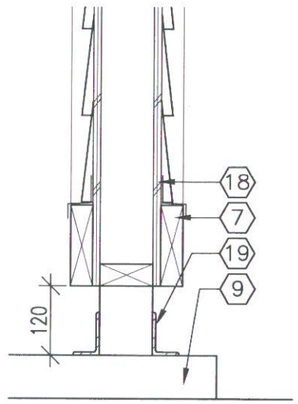

SECTIONS
1:10

2 — GARBAGE ENCLOSURE DETAILS

REQUIRED YARD CALCULATIONS

MIN REAR YARD: 7620mm WALL HEIGHT: 11810mm
MIN SIDE YARD: 2438mm
MIN FRONT YARD: 7620mm

10ft/3.048m + 20% wall height + 5% bldg length

SETBACK A:
(3.048m) + 20%(11.810m) + 5%(41.300m)
3.048m + 2.362m + 2.065m
REQ'D SETBACK = 7.475m

SETBACK B:
(3.048m) + 20%(11.810m) + 5%(92.100m)
3.048m + 2.362m + 4.605m
REQ'D SETBACK = 10.015m

SETBACK C:
(3.048m) + 20%(11.810m) + 5%(37.250m)
3.048m + 2.362m + 1.863m
REQ'D SETBACK = 7.273m

SETBACK D:
(3.048m) + 20%(11.810m) + 5%(19.200m)
3.048m + 2.362m + 0.960m
REQ'D SETBACK = 6.370m*
*MIN SETBACK = 7.620m

REQUIRED PARKING CALCULATIONS (AS PER PART XI OF CITY OF WINNIPEG ZONING BYLAW No. 6400/94)

AS PER TABLE 1100 (1):
1b) Multiple-family dwellings for senior citizens or handicapped persons – 1 per 5 dwelling units
TOTAL UNITS: 120/5 = 24 PARKING SPACES REQ'D

AS PER TABLE 1100 (1):
4) Personal care homes, nursing homes – 1 guest parking space per 20 residents plus 1 for every 3 employees on the maximum shift
BUILDING CAPACITY: 203 RESIDENTS (DIV BY 20) = 10 SPACES
20 STAFF (DIV BY 3) = 7 SPACES
TOTAL PARKING SPACES REQ'D = 17 SPACES

PARKING STALLS PROVIDED: 24 SPACES

SITE COVERAGE

BLDG FOOTPRINT / SITE AREA = 2958.7 sq.m. / 12129.6 sq.m. = 24.4% SITE COVERAGE

*NOTE: CALCULATION DOES NOT INCLUDE CAR CANOPY, GARBAGE ENCLOSURE, PATIOS, PERGOLAS AND GAZEBOS

KEYNOTES

#	NOTE	#	NOTE
1	SIGNAGE BY OTHERS	10	LATTICE BEYOND
2	SIGN LIGHTING BY ELECTRICAL AT GRADE	11	LATCH SET
	(STREET SIDE ONLY)	12	HEAVY DUTY HINGES
3	ASPHALT SHINGLES	13	HASPE
4	SYNTHETIC MOLDING	14	BOLLARD
5	WOOD TRIM (PAINT)	15	WOOD STOPS (PAINT)
6	PREFINISHED LATTICE	16	38x89 WOOD FRAMING
7	PREFINISHED METAL WRAPPED TRIM	17	BUILDING PAPER
8	VINYL SIDING	18	12 PLYWOOD SHEATHING
9	CONCRETE PAD	19	REINFORCING

PRELIMINARY
NOT FOR CONSTRUCTION
PLOTTED DATE: MARCH 23, 2005

CALEB GROUP OF COMPANIES

PROJECT NO. S-26-2004
DRAWING NO. P-3
DATE 05/03/23
SCALE 1:600
DRAWN JMU
CHECKED JLW

PROJECT TITLE
CALEB MANOR
WINNIPEG, MB

DRAWING TITLE
PROPOSED SITE DETAILS

SAUNDERS EVANS ARCHITECTS INC.
204-2100 Airport Drive, Saskatoon
Saskatchewan, S7L 6M6, Canada
Ph: (306) 652-6457 F: (306) 652-6459
E-Mail: saskatoon@saundersevans.com
2230 Lorne Street, Regina
Saskatchewan, S4P 2M7, Canada
Ph: (306) 569-2255 F: (306) 359-6846
E-Mail: regina@saundersevans.com

THIS IS EXHIBIT "" REFERRED TO IN FILE NO. DASZ 16/2005
DATED THIS ___DAY OF ____20___

CLERK



PRELIMINARY
NOT FOR CONSTRUCTION
PLOT DATE: MARCH 23, 2005

PROJECT NO. S-26-2004
DRAWING NO. P-4
DATE Mar. 22/05
SCALE 1:300
DRAWN BD
CHECKED NJ
PROJECT TITLE CALEB MANOR WINNIPEG, MB
DRAWING TITLE PROPOSED LANDSCAPE PLAN
CALEB GROUP OF COMPANIES
SAUNDERS EVANS ARCHITECTS INC.

HILDERMAN THOMAS FRANK CRAM
Landscape Architecture • Planning
500-1-13 Emmanuel Avenue East, Winnipeg, Manitoba R3B 0R3
Tel. 204.957.9907 Fax 204.957.1467 Email office@hfc.mb.ca

PAGE 3 OF 13
THIS IS EXHIBIT " " REFERRED TO
IN FILE NO. DASZ 16-2005
DATED THIS ____ DAY OF ____ 20__

CLERK

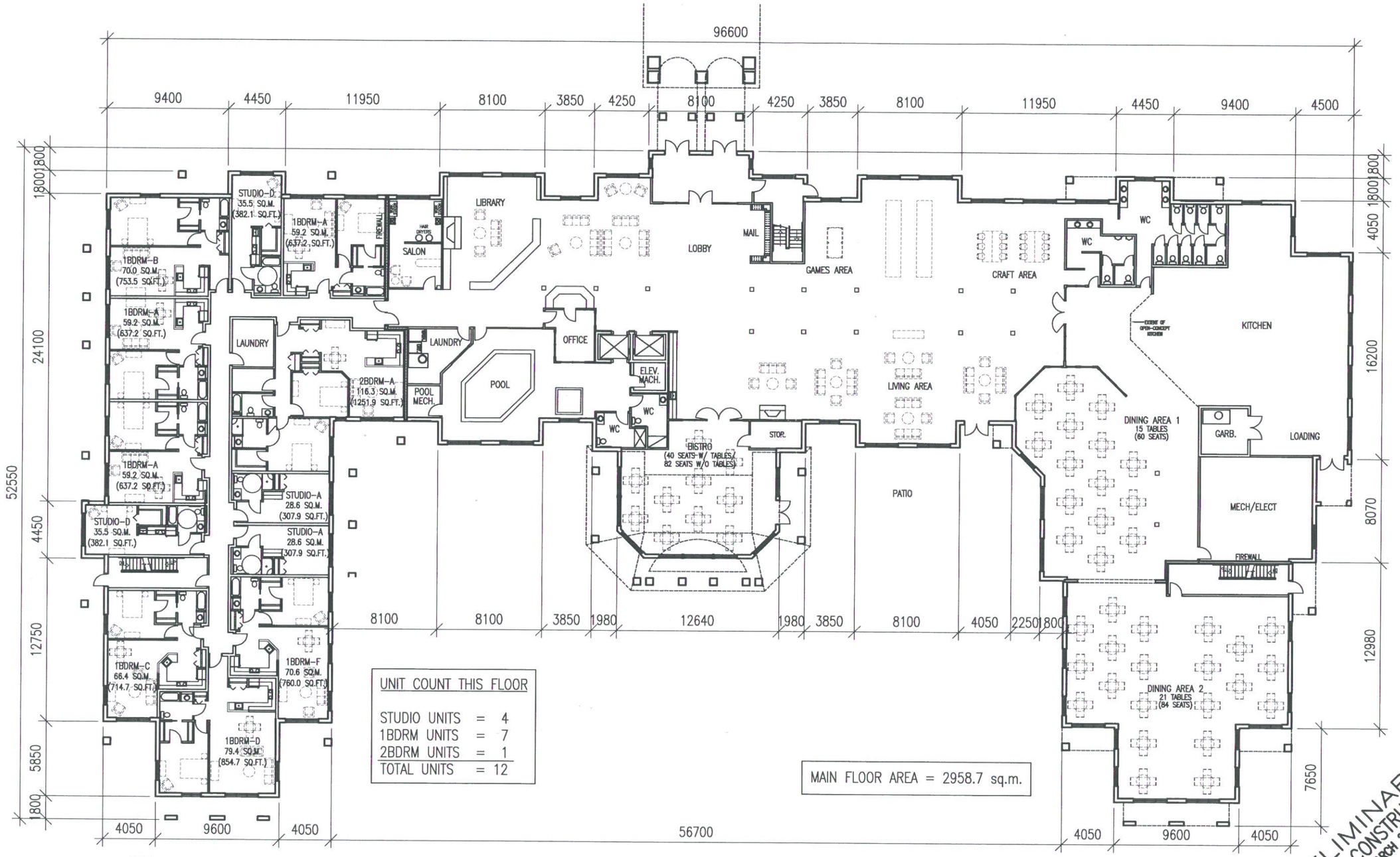

UNIT COUNT THIS FLOOR	
STUDIO UNITS	= 4
1BDRM UNITS	= 7
2BDRM UNITS	= 1
TOTAL UNITS	= 12

MAIN FLOOR AREA = 2958.7 sq.m.

PRELIMINARY
NOT FOR CONSTRUCTION
PLOTTED DATE: MARCH 23, 2005

1 / – PROPOSED MAIN FLOOR PLAN
1:300

CALEB GROUP OF COMPANIES

PROJECT NO.	S-26-2004
DRAWING NO.	P-5
DATE	05/03/23
SCALE	1:300
DRAWN	JMU
CHECKED	JLW

PROJECT TITLE
CALEB MANOR
WINNIPEG, MB

DRAWING TITLE
PROPOSED MAIN FLOOR PLAN

SAUNDERS EVANS ARCHITECTS INC.
204-2100 Airport Drive, Saskatoon
Saskatchewan, S7L 6M6, Canada
Ph: (306) 652-6457 F: (306) 652-6459
E-Mail: saskatoon@saundersevans.com
2230 Lorne Street, Regina
Saskatchewan, S4P 2M7, Canada
Ph: (306) 569-2255 F: (306) 359-6846
E-Mail: regina@saundersevans.com

PAGE 6 OF 13

THIS IS EXHIBIT "" REFERRED TO
IN FILE NO. DASZ 16/2005
DATED THIS ___DAY OF ____20___

CLERK

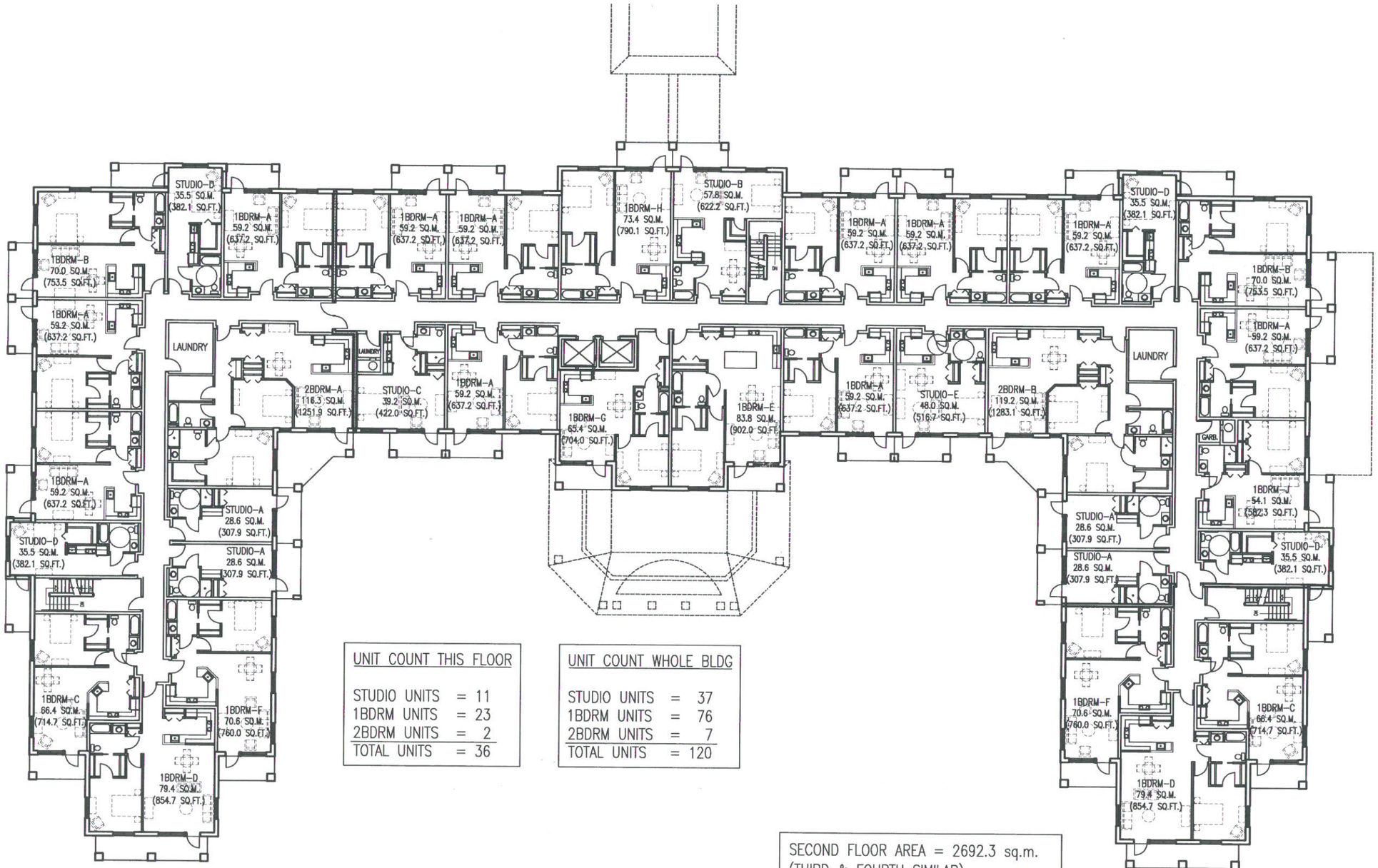

UNIT COUNT THIS FLOOR	
STUDIO UNITS	= 11
1BDRM UNITS	= 23
2BDRM UNITS	= 2
TOTAL UNITS	= 36

UNIT COUNT WHOLE BLDG	
STUDIO UNITS	= 37
1BDRM UNITS	= 76
2BDRM UNITS	= 7
TOTAL UNITS	= 120

SECOND FLOOR AREA = 2692.3 sq.m.
(THIRD & FOURTH SIMILAR)
TOTAL BUILDING AREA = 11035.6 sq.m.

1 / – PROPOSED SECOND FLOOR PLAN (THIRD & FOURTH SIM.)
1:300

PRELIMINARY
NOT FOR CONSTRUCTION
PLOTTED DATE: MARCH 23, 2005

CALEB GROUP OF COMPANIES

PROJECT NO.	S–26–2004
DRAWING NO.	P–6
DATE	05/03/23
SCALE	1:300
DRAWN	JMU
CHECKED	JLW

PROJECT TITLE
CALEB MANOR
WINNIPEG, MB

DRAWING TITLE
PROPOSED SECOND FLOOR PLAN
THIRD & FOURTH SIMILAR

SAUNDERS EVANS ARCHITECTS INC.
204-2100 Airport Drive, Saskatoon
Saskatchewan, S7L 6M6, Canada
Ph: (306) 652-6457 F: (306) 652-6459
E-Mail: saskatoon@saundersevans.com
2230 Lorne Street, Regina
Saskatchewan, S4P 2M7, Canada
Ph: (306) 569-2255 F: (306) 359-6846
E-Mail: regina@saundersevans.com

PAGE 7 OF 13

THIS IS EXH[illegible] REFERRED TO
IN FILE NO. DA52 16/2005
DATED THIS ___DAY OF ____20___

CLERK