

PAGE 1 OF 16

THIS IS EXHIBIT "7" REFERRED TO
IN FILE NO. DAV 129773/2005D.
DATED THIS 13TH DAY OF OCT 20 05

CLERK

1 - VICINITY MAP

1:1000

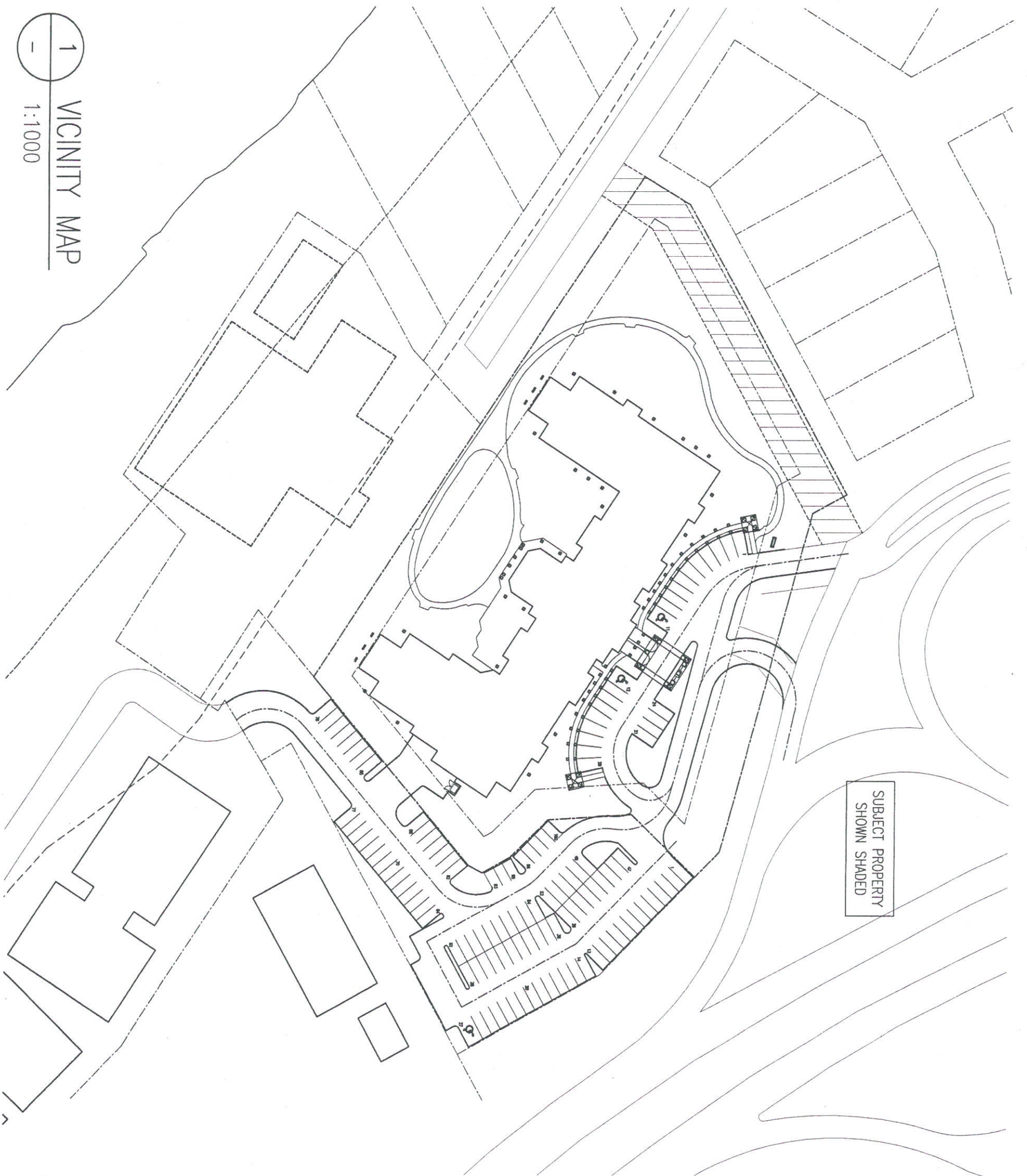

PRELIMINARY
NOT FOR CONSTRUCTION
PLOTTED DATE: MARCH 23, 2005

THIS IS EXHIBIT "7" REFERRED TO IN FILE NO. DAV 129113/2005D.
DATED THIS 6TH DAY OF OCT 20 23

PAGE 2 OF 16

SAUNDERS EVANS ARCHITECTS INC.
204-2100 Airport Drive, Saskatoon
Saskatchewan, S7L 6M6, Canada
Ph: (306) 652-6457 F: (306) 652-6459
E-Mail: saskatoon@saundersevans.com
2230 Lorne Street, Regina
Saskatchewan, S4P 2M7, Canada
Ph: (306) 569-2255 F: (306) 359-6846
E-Mail: regina@saunders-evans.com

CALEB GROUP OF COMPANIES

PROJECT TITLE: CALEB MANOR WINNIPEG, MB	DATE: 05/03/23	PROJECT NO.: S-26-2004
	SCALE: 1:1000	DRAWING NO.: P-1
DRAWING TITLE: VICINITY MAP	DRAWN: JMU	
	CHECKED: JLW	

TOTAL SITE AREA = 12129.6m² or 3.0acres

*SITE DIMENSIONS ARE BASED ON INFORMATION PROVIDED BY CITY OF WINNIPEG

KEYNOTES	
#	NOTE
1	EXISTING GOLF COURSE BUILDING
2	EXISTING CANOE CLUB BUILDING (TO BE REMOVED)
3	EXISTING CHAIN LINK FENCE TO REMAIN
4	PROPOSED WOOD PERGOLA AND GAZEBO – SEE RENDERING
5	PROPOSED CONCRETE WALKWAY
6	PROPOSED ASPHALT PARKING LOT
7	PROPOSED DROP OFF ZONE
8	PROPOSED GARBAGE ENCLOSURE – SEE 2/P-3
9	PROPOSED LOADING AREA
10	PROPOSED LANDSCAPED AMENITY AREA
11	PROPOSED LIGHTING TO BE PROVIDED UNDER CANOPY, AWNINGS, TRELLIS AND GAZEBO
12	PROPOSED SIGN – SEE 1/P-3
13	PROPOSED PATIO
14	PROPOSED ASPHALT PATH

PROPOSED FOUR STOREY SENIORS' RESIDENCE (120 UNITS)
FOOTPRINT AREA = 2958.7sq.m.

PROP. LINE ±80.123m
PROP. LINE ±13.085m
PROP. LINE ±19.43m
PROP. LINE ±84.222m
PROP. LINE ±8.59m
PROP. LINE ±21.62m
PROP. LINE ±33.11m
PROP. LINE ±39.319m
PROP. LINE ±20.4m
PROP. LINE ±12.8m
PROP. LINE ±7.9m
PROP. LINE ±3.68m
PROP. LINE ±59.1m
PROP. LINE ±85.3m
PROP. LINE ±8.95m
PROP. LINE ±20.98m
PROP. LINE ±175.15m
SETBACK A
SETBACK B
SETBACK C
SETBACK D
10m EASEMENT
FLOODWAY LINE
FLOODWAY FRINGE LINE

DEVELOPMENT EXAMINATION BRANCH
THIS PLAN IS SUBMITTED FOR APPROVAL
IN CONNECTION WITH DAV 05-129773/SD
SHEET # 1 OF 1
APPLICANT (SCD.) TK.
DEV. EXAM. QD
DATE 05/11/05

PRELIMINARY
NOT FOR CONSTRUCTION
PLOTTED DATE: MARCH 23, 2005

1 PROPOSED SITE PLAN
1:600

CALEB GROUP OF COMPANIES

PROJECT NO. S-26-2004
DRAWING NO. P-2

DATE 05/03/23
SCALE 1:600
DRAWN JMU
CHECKED JLW

CURRENT ZONE: PR2
FUTURE ZONE: RM-3

APPROXIMATE COMPLETION TIME IS ESTIMATED AT 18 MONTHS FROM START OF CONSTRUCTION

PROJECT TITLE
CALEB MANOR
WINNIPEG, MB

DRAWING TITLE
PROPOSED SITE PLAN

SAUNDERS EVANS ARCHITECTS INC.
204-2100 Airport Drive, Saskatoon
Saskatchewan, S7L 6M6, Canada
Ph: (306) 652-6457 F: (306) 652-6459
E-Mail: saskatoon@saundersevans.com
2230 Lorne Street, Regina
Saskatchewan, S4P 2M7, Canada
Ph: (306) 569-2255 F: (306) 359-6846

PAGE 3 of 16

THIS IS EXHIBIT "7" REFERRED TO IN FILE NO. DAV 129773/2005D
DATED THIS 12TH DAY OF OCT 2005

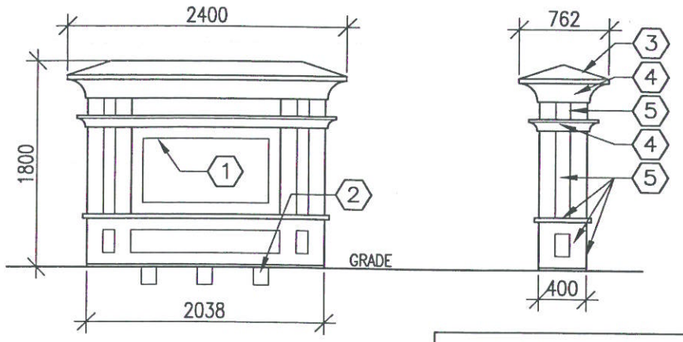

1 – SIGN ELEVATION
1:50

NOTE: SIGN TO COMPLY WITH TABLE 1250(1)/ARTICLE 1220 CITY OF WINNIPEG ZONING BY-LAW No. 6400/94

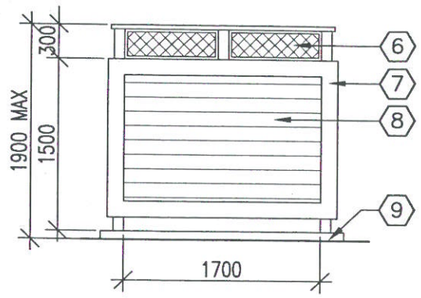

SIDE ELEVATION
1:50

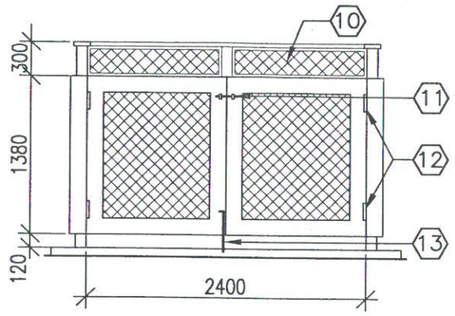

FRONT ELEVATION
1:50

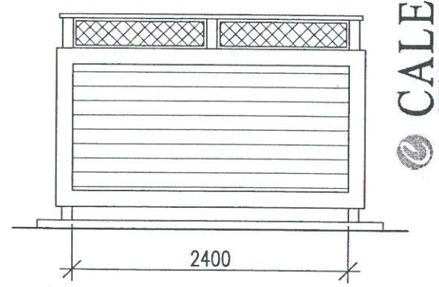

BACK ELEVATION
1:50

REQUIRED YARD CALCULATIONS

MIN REAR YARD: 7620mm WALL HEIGHT: 11810mm
MIN SIDE YARD: 2438mm
MIN FRONT YARD: 7620mm

10ft/3.048m + 20% wall height + 5% bldg length

SETBACK A:
(3.048m) + 20%(11.810m) + 5%(41.300m)
3.048m + 2.362m + 2.065m
REQ'D SETBACK = 7.475m

SETBACK B:
(3.048m) + 20%(11.810m) + 5%(92.100m)
3.048m + 2.362m + 4.605m
REQ'D SETBACK = 10.015m

SETBACK C:
(3.048m) + 20%(11.810m) + 5%(37.250m)
3.048m + 2.362m + 1.863m
REQ'D SETBACK = 7.273m

SETBACK D:
(3.048m) + 20%(11.810m) + 5%(19.200m)
3.048m + 2.362m + 0.960m
REQ'D SETBACK = 6.370m*
*MIN SETBACK = 7.620m

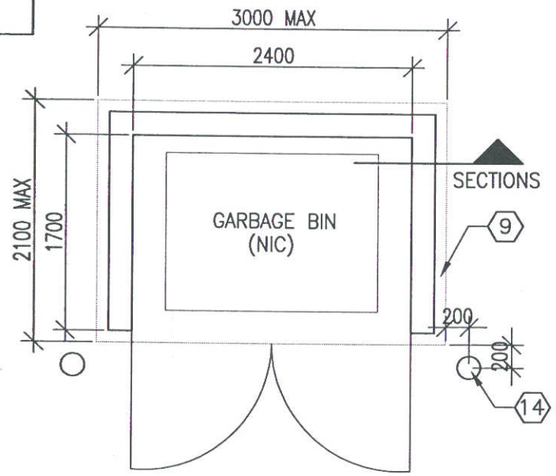

PLAN
1:50

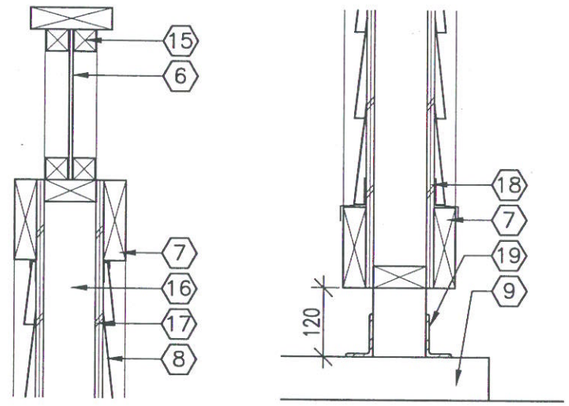

SECTIONS
1:10

2 – GARBAGE ENCLOSURE DETAILS

REQUIRED PARKING CALCULATIONS (AS PER PART XI OF CITY OF WINNIPEG ZONING BYLAW No. 6400/94)

AS PER TABLE 1100 (1):
1b) Multiple-family dwellings for senior citizens or handicapped persons – 1 per 5 dwelling units
TOTAL UNITS: 120/5 = 24 PARKING SPACES REQ'D

AS PER TABLE 1100 (1):
4) Personal care homes, nursing homes – 1 guest parking space per 20 residents plus 1 for every 3 employees on the maximum shift
BUILDING CAPACITY: 203 RESIDENTS (DIV BY 20) = 10 SPACES
20 STAFF (DIV BY 3) = 7 SPACES
TOTAL PARKING SPACES REQ'D = 17 SPACES

PARKING STALLS PROVIDED: 24 SPACES

SITE COVERAGE

BLDG FOOTPRINT / SITE AREA = 2958.7 sq.m. / 12129.6 sq.m. = 24.4% SITE COVERAGE

*NOTE: CALCULATION DOES NOT INCLUDE CAR CANOPY, GARBAGE ENCLOSURE, PATIOS, PERGOLAS AND GAZEBOS

KEYNOTES

#	NOTE	#	NOTE
1	SIGNAGE BY OTHERS	10	LATTICE BEYOND
2	SIGN LIGHTING BY ELECTRICAL AT GRADE	11	LATCH SET
	(STREET SIDE ONLY)	12	HEAVY DUTY HINGES
3	ASPHALT SHINGLES	13	HASPE
4	SYNTHETIC MOLDING	14	BOLLARD
5	WOOD TRIM (PAINT)	15	WOOD STOPS (PAINT)
6	PREFINISHED LATTICE	16	38x89 WOOD FRAMING
7	PREFINISHED METAL WRAPPED TRIM	17	BUILDING PAPER
8	VINYL SIDING	18	12 PLYWOOD SHEATHING
9	CONCRETE PAD	19	REINFORCING

PRELIMINARY
NOT FOR CONSTRUCTION
PLOTTED DATE: MARCH 23, 2005

CALEB GROUP OF COMPANIES

PROJECT NO. S-26-2004
DRAWING NO. P-3
DATE 05/03/23
SCALE 1:600
DRAWN JMU
CHECKED JLW

PROJECT TITLE
CALEB MANOR
WINNIPEG, MB

DRAWING TITLE
PROPOSED SITE DETAILS

SAUNDERS EVANS ARCHITECTS INC.
204-2100 Airport Drive, Saskatoon
Saskatchewan, S7L 6M6, Canada
Ph: (306) 652-6457 F: (306) 652-6459
E-Mail: saskatoon@saundersevans.com
2230 Lorne Street, Regina
Saskatchewan, S4P 2M7, Canada
Ph: (306) 569-2255 F: (306) 359-6846
E-Mail: regina@saundersevans.com

THIS IS EXHIBIT "7" REFERRED TO IN FILE NO. DAV 129773/2005D
DATED THIS 12TH DAY OF OCT 2005

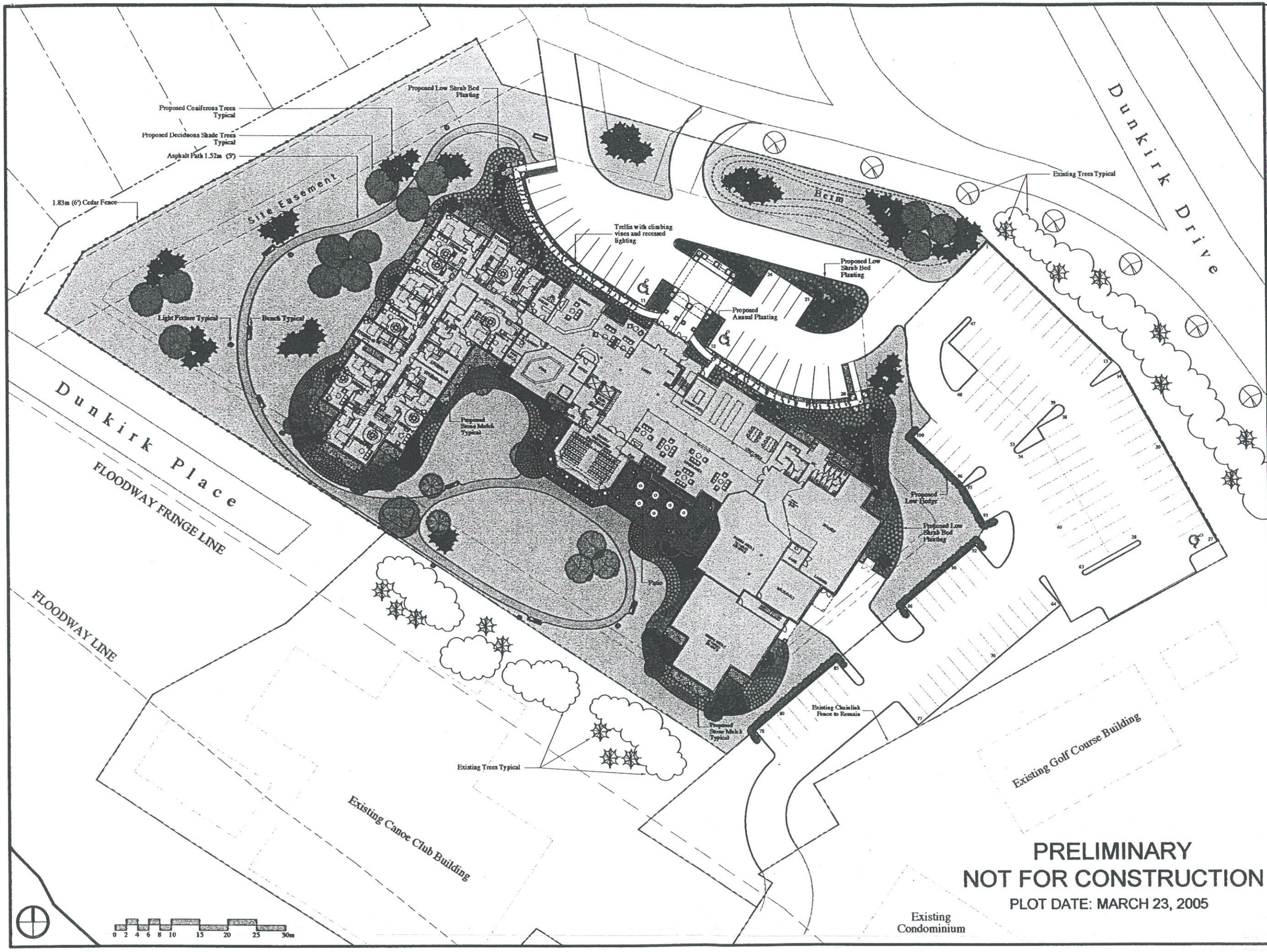

PRELIMINARY
NOT FOR CONSTRUCTION
PLOT DATE: MARCH 23, 2005

PROJECT TITLE
CALEB MANOR
WINNIPEG, MB

DRAWING TITLE
PROPOSED
LANDSCAPE PLAN

PROJECT NO.	S-26-2004
DRAWING NO.	P-4
DATE	Mar. 22/05
SCALE	1:300
DRAWN	BD
CHECKED	NJ

CALEB GROUP OF COMPANIES

SAUNDERS EVANS ARCHITECTS INC.

HILDERMAN THOMAS FRANKLIN CRAM

Landscape Architecture • Planning

200 - 115 Bannatyne Avenue East, Winnipeg, Manitoba R3B 0R3
Tel. 204.284.9907 Fax 204.957.1467 Email office@hftc.mb.ca

PAGE 5 OF 16

THIS IS EXHIBIT "7" REFERRED TO
IN FILE NO. DAV 129773/2005
DATED THIS 20th DAY OF Oct 20 05

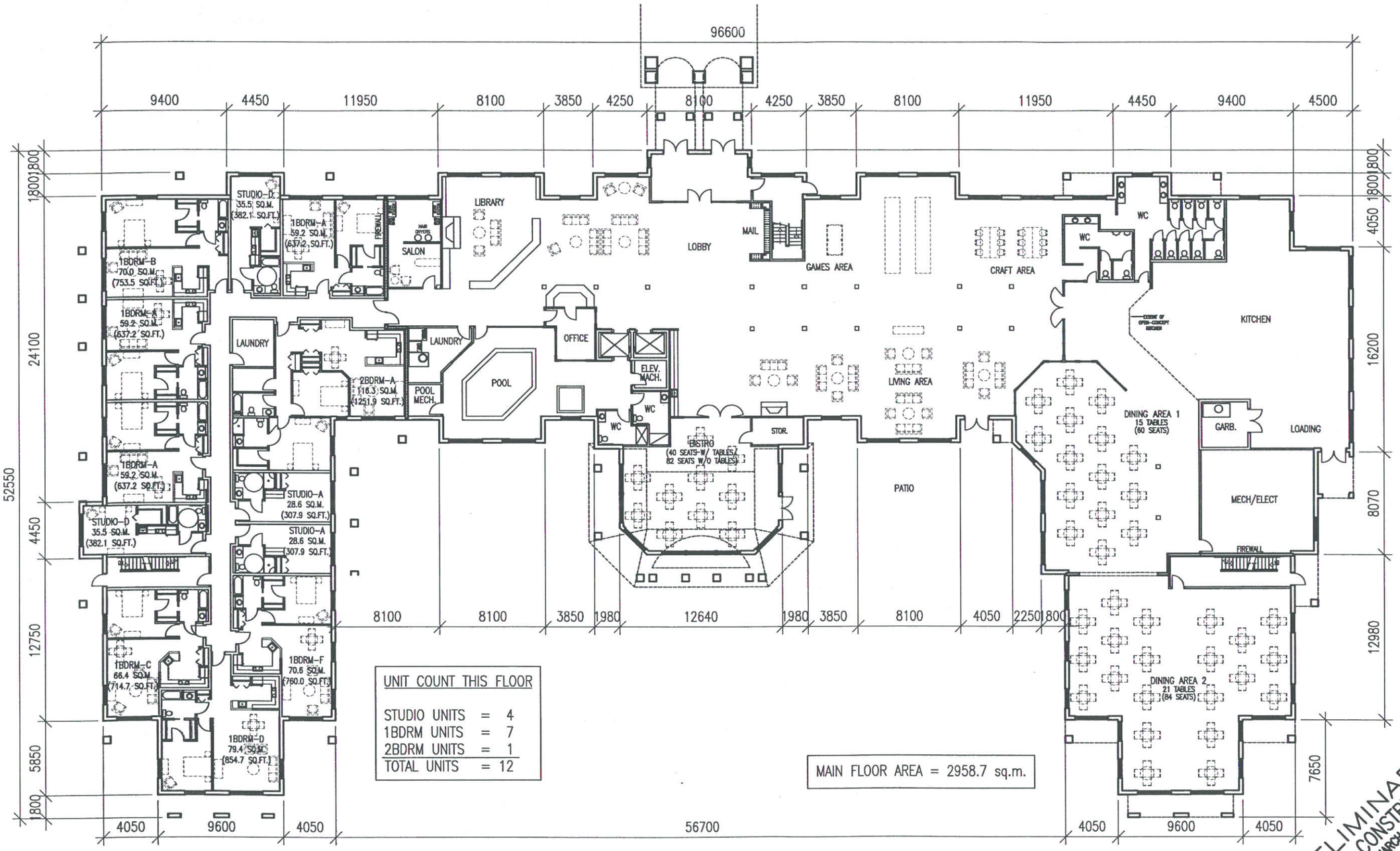

UNIT COUNT THIS FLOOR

STUDIO UNITS	=	4
1BDRM UNITS	=	7
2BDRM UNITS	=	1
TOTAL UNITS	=	12

MAIN FLOOR AREA = 2958.7 sq.m.

PRELIMINARY
NOT FOR CONSTRUCTION
PLOTTED DATE: MARCH 23, 2005

1 / – PROPOSED MAIN FLOOR PLAN
1:300

CALEB GROUP OF COMPANIES

PROJECT NO.	S-26-2004
DRAWING NO.	P-5
DATE	05/03/23
SCALE	1:300
DRAWN	JMU
CHECKED	JLW

PROJECT TITLE
CALEB MANOR
WINNIPEG, MB

DRAWING TITLE
PROPOSED MAIN FLOOR PLAN

SAUNDERS EVANS ARCHITECTS INC.
204-2100 Airport Drive, Saskatoon
Saskatchewan, S7L 6M6, Canada
Ph: (306) 652-6457 F: (306) 652-6459
E-Mail: saskatoon@saundersevans.com
2230 Lorne Street, Regina
Saskatchewan, S4P 2M7, Canada
Ph: (306) 569-2255 F: (306) 359-6846
E-Mail: regina@saundersevans.com

THIS IS EXHIBIT "7" REFERRED TO
IN FILE NO. DAV 129773/2005D.
DATED THIS 6TH DAY OF OCT 2006

CLERK

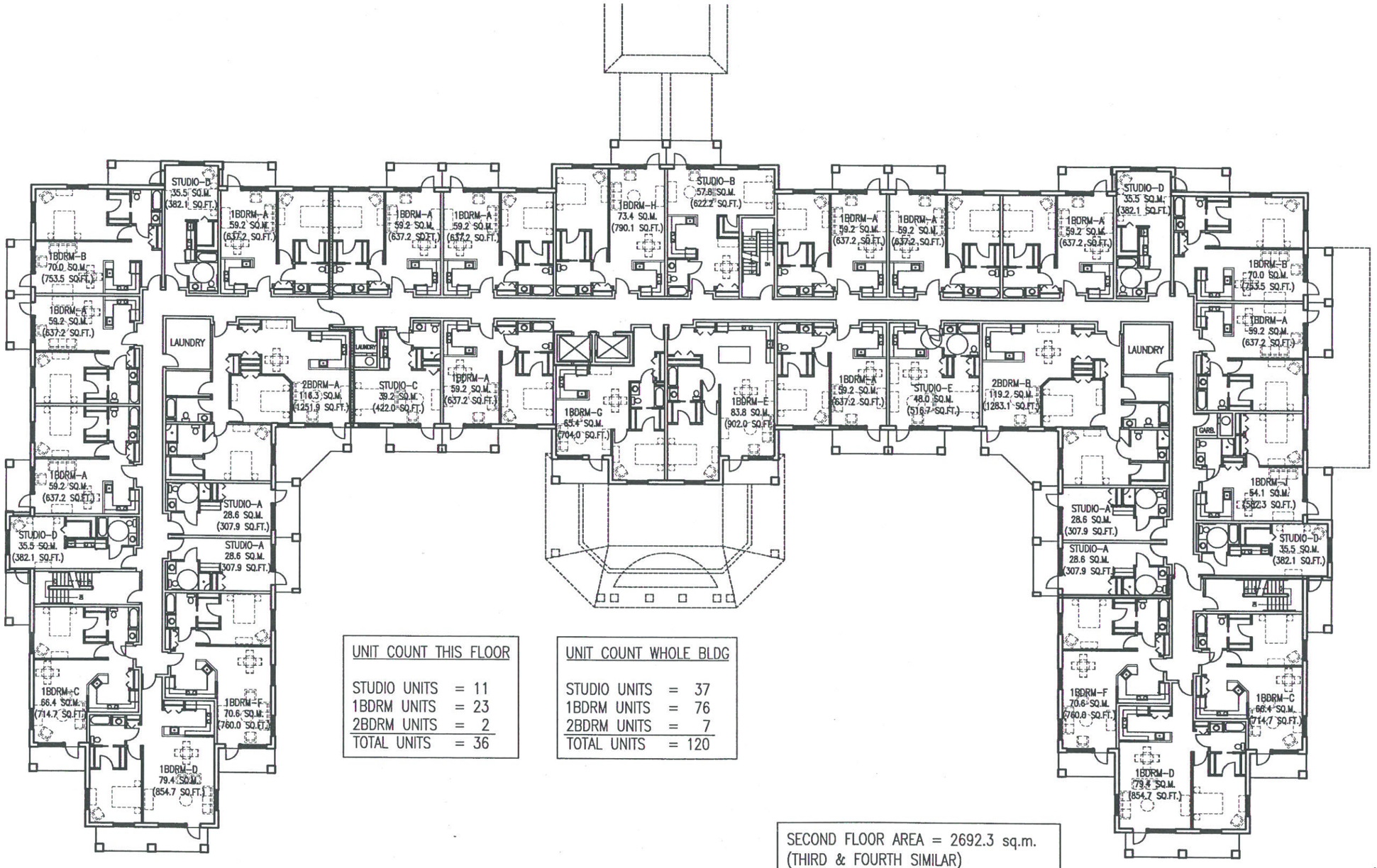

UNIT COUNT THIS FLOOR	
STUDIO UNITS	= 11
1BDRM UNITS	= 23
2BDRM UNITS	= 2
TOTAL UNITS	= 36

UNIT COUNT WHOLE BLDG	
STUDIO UNITS	= 37
1BDRM UNITS	= 76
2BDRM UNITS	= 7
TOTAL UNITS	= 120

SECOND FLOOR AREA = 2692.3 sq.m.
(THIRD & FOURTH SIMILAR)
TOTAL BUILDING AREA = 11035.6 sq.m.

1 / – PROPOSED SECOND FLOOR PLAN (THIRD & FOURTH SIM.)
1:300

PRELIMINARY
NOT FOR CONSTRUCTION
PLOTTED DATE: MARCH 23, 2005

CALEB GROUP OF COMPANIES

DATE	05/03/23
SCALE	1:300
DRAWN	JMU
CHECKED	JLW
PROJECT NO.	S-26-2004
DRAWING NO.	P – 6

PROJECT TITLE
CALEB MANOR
WINNIPEG, MB

DRAWING TITLE
PROPOSED SECOND FLOOR PLAN
THIRD & FOURTH SIMILAR

SAUNDERS EVANS ARCHITECTS INC.
204-2100 Airport Drive, Saskatoon
Saskatchewan, S7L 6M6, Canada
Ph: (306) 652-6457 F: (306) 652-6459
E-Mail: saskatoon@saundersevans.com
2230 Lorne Street, Regina
Saskatchewan, S4P 2M7, Canada
Ph: (306) 569-2255 F: (306) 359-6846
E-Mail: regina@saundersevans.com

THIS IS EXHIBIT "7" REFERRED TO
IN FILE NO. DAV 129773/2005D.
DATED THIS 12TH DAY OF OCT 2005