Report - Standing Policy Committee on Property and Development - April 4, 2006

Item No. 21 Winnipeg Parkway System Review
File PR-4

STANDING COMMITTEE RECOMMENDATION:

On April 19, 2006, the Executive Policy Committee concurred in the recommendation of the Standing Policy Committee on Property and Development and submits the following to Council:

1. That the Parkways making up the Winnipeg Parkway System be renamed as outlined in the Report from the Director of Planning, Property and Development dated March 21, 2006.

2. That the routes of the North Assiniboine Parkway and the South Assiniboine Parkway be changed as outlined in the report from the Director of Planning, Property and Development dated March 21, 2006.

3. That the signage, accessibility and trail construction standards be endorsed as outlined in the Report from the Director of Planning, Property and Development dated March 21, 2006.

4. That the Proper Officer of the City be authorized to do all things necessary to implement the intent of the foregoing.

Report - Standing Policy Committee on Property and Development - April 4, 2006

DECISION MAKING HISTORY:

EXECUTIVE POLICY COMMITTEE RECOMMENDATION:

On April 19, 2006, the Executive Policy Committee concurred in the recommendation of the Standing Policy Committee on Property and Development and submitted the matter to Council.

STANDING COMMITTEE RECOMMENDATION:

On April 4, 2006, the Standing Policy Committee on Property and Development concurred in the administrative recommendation and submitted the matter to the Executive Policy Committee and Council.

Re: **Winnipeg Parkway System Review**

For submission to: **Standing Policy Committee on Property and Development**

Original report signed by: **Director of Planning, Property and Development**

Report date: March 21, 2006

Recommendation(s):

1. That the Parkways making up the Winnipeg Parkway System be renamed as outlined.
2. That the routes of the North Assiniboine Parkway and the South Assiniboine Parkways be changed as outlined.
3. That the signage, accessibility and trail construction standards be endorsed as outlined.

REPORT SUMMARY

Key Issues:

- Some factors have changed since the initiation of the Parkway System in 1993.
    - Funding for land acquisition and parkway development has become more challenging.
    - Local Stewardship groups have become extremely important in supporting and furthering the development of the Parkway System.
    - The Winnipeg Parkway System has reached a stage where the majority of the system is usable.
- There are significant next steps that need to be planned.
    - Connectivity is now extremely important. It is important to connect the completed parkways, with parkways yet to be developed and the rest of the trail system in Winnipeg.
    - The public is not well informed regarding the Winnipeg Parkway System or the Winnipeg trail system. The following actions are recommended:
        - Branding through naming and a consistent look and feel for all trails and Parkway signage in consultation with the Winnipeg Trails Association.
        - Accessibility and connectivity standards will be created to allow decision making related to routing, trail conditions, and grades.
        - Need to ensure that construction details are consistent.

Implications of the Recommendation(s):

General implications:

- [X] **None**
- [ ] **For the organization overall and/or for other departments**
- [ ] **For the community and/or organizations external to the City of Winnipeg**
- [ ] **Involves a multi-year contract**

Comment(s):

-

Policy implications:

- [ ] **No**
- [X] **Yes**

Comment(s):

- Policy standards for parkway and trail signage, accessibility and construction details are recommended.

Environmental implications:

- [ ] **No**
- [X] **Yes**

Comment(s):

- Publicly owned riverbanks are an asset to the entire city, and this strategy assists with the ongoing efforts to sustain, enhance and preserve access to the rivers.
- This strategy provides greater opportunities for residents to participate in active transportation through the parkway systems and through increased access to the rivers.
- Riverbanks can contain a diversity of plant and animal species, and this strategy supports the City's efforts to identify and (where appropriate) protect ecologically significant lands and habitat.
- This strategy supports the fourth section (Sustainable Land Use and Development) of Embracing Sustainability, the City's environmental priority plan. By approving this strategy, the City will contribute towards the commitment outlined in Section 4.5 of the plan.

Human resources implications:

- [X] **No**
- [ ] **Yes**

Comment(s):

-

Financial implications:

- [X] **Within approved current and/or capital budget**

☐ **Current and/or capital budget adjustment required**
Comment(s):

-

REASON FOR THE REPORT:

At its meeting on September 22, 1993, Council adopted, in part, the recommendation *that the priority of sections of riverbank for development purposes be reviewed and reassessed annually and at least once every five years in order to reaffirm or adjust development priorities for the sections of riverbank in accordance with changing conditions and circumstances.*

HISTORY:

At its meeting on September 22, 1993, Council adopted the following recommendations of the Committee on Protection, Parks and Culture regarding the Winnipeg Parkway System:

1. That the Criteria outlined in the Administrative report be approved as a means for establishing development priority of the various sections of riverbanks along the Red and Assiniboine Rivers towards the long term establishment of a City-wide Riverbank Parkway System.
2. Those sixteen sections of riverbanks as outlined in Exhibit "A" comprise the City-wide Riverbank Parkway System.
3. That the North Winnipeg Parkway, the Assiniboine Parkway, the Fort Rouge Parkway, the St. Boniface Parkway, and the Kildonan Parkway, be approved in principle for development priority as the First Phase of the City-wide Riverbank Parkway System.
4. That the priority of sections of riverbank for development purposes be reviewed and reassessed annually and at least once every five years in order to reaffirm or adjust development priorities for the sections of riverbank in accordance with changing conditions and circumstances.
5. That the Proper Officers of the City be authorized to do all things necessary to implement the foregoing.

DISCUSSION:

Introduction

The development of the Riverbank Parkway System has been a priority in Plan Winnipeg for many years. The goal is to develop a linear parkway system, and enhance that system through the acquisition of riverbank lands and other lands that link the parkway system to the larger park system. The purpose of this undertaking is to promote the use of the City's rivers and riverbanks by facilitating public access to rivers and riverbank lands and encouraging the use of Winnipeg rivers for transportation and recreation through the provision of boat launches, docks, trails and other accessibility improvements.

When the Winnipeg Parkway System was initiated in 1993 it was felt that development of the system should not occur haphazard and piece-meal or be driven by primarily local interest. It was suggested that concentration of civic resources and funding towards development of certain specific sections of riverbank parkway would appear to be a more prudent, cost effective approach for addressing broader city-wide public interests for increasing access and leisure use of the City's riverbank parkway system. To serve this purpose the riverbanks within Winnipeg were characterized into sixteen sections of riverbanks. Each section could be developed separately and function independently from the other sections of riverbank as a "self-contained" riverbank parkway. This was hoped to insure that, as each section of parkway became fully operational, the public could derive recreational leisure benefits during the interim period of perhaps two or three decades in which the complete Winnipeg Parkway System would develop.

Environmental Scan

In the years since 1993 the environment has changed and the City has learned some important lessons.

In the 1993 Parkway report it was recognized that identifying funding for the development of the parkway system was going to be a significant challenge. In fact, this issue has become a far more significant challenge than was expected in 1993. In the years directly after the original 1993 report it was not uncommon for $500,000 to be identified annually in the Capital Budget for the purposes of riverbank land acquisition. The last year that riverbank land acquisition funding was identified was 2003 when $200,000 was budgeted.

In the 1993 report it was felt that development driven by local interest would be best avoided. However, we are now beginning to realize the importance of taking advantage of local interest. Currently local stewardship groups are extremely important in raising funds for the development of the riverbank parkway system. The most recent example is the Cloutier Drive Trail, which is part of the St. Norbert Parkway. In this case a stewardship group, the Cloutier Drive Residents Association, raised almost $200,000 for the construction of two kilometers of Parkway. This includes $55,000 in Community Incentive and Land Dedication Grants but the remainder was made up from non City funding sources and grants raised by the stewardship group.

The Winnipeg Parkway System has reached a stage where a substantial portion is now in place, as illustrated in Appendix A. Given this year's planned pathway development, a parkway user will be able to travel from The Forks a great distance in three directions using the riverbank parkway and trail system. There are still significant issues to deal with such as areas where the sidewalks of busy streets must be incorporated into the route (Henderson Hwy and Pembina Hwy) and in some cases the route is only available on one side of the river. A user can travel from The Forks to Vimy Arena on Sturgeon Creek in west Winnipeg, a distance of approximately 15 kms. A user can travel from The Forks to Kildonan Park, a distance of approximately 9 kms. And a user can travel from The Forks to the Floodway Gates in St. Norbert, a distance of approximately 27 kms.

Challenges

Connectivity

Trail stewardship groups and trail users in the city of Winnipeg have identified the lack of connectivity between the various trails and parkways as a major issue. A major goal identified by The 2003 Strategic Trails Plan for Winnipeg, done for the Winnipeg Trails Association, is to connect the various trails into a larger whole to allow for a more integrated and continuous trail system in the City. A more linked and continuous trail system offers opportunities for greater community use including such functions as special events on trails, longer routes for bikes, walking and jogging, wheeling in strollers, chairs and scooters, and opportunities for winter activities like cross country skiing and snow shoeing. The 2005 City of Winnipeg Active Transportation Study also identified the trail disconnects as a major issue and suggests that the city needs to focus on maximizing the usability of current facilities as well as developing an Active Transportation network throughout the City.

Marketing of the Parkway System and Way-finding

The recent studies regarding recreational trails and Active Transportation facilities have highlighted the fact that the general public is not well informed regarding the availability of facilities including the Winnipeg Parkway System. The Strategic Trails Plan for Winnipeg (2003) recommends that an aggressive marketing campaign should be developed to present Winnipeg trails as an opportunity for the local community and outside visitors. It was further recommended that as the trail system in Winnipeg becomes more developed and better connected it would present an opportunity for the development of tourism as an added attraction and amenity in the City. The 2005 Active Transportation Study also identified the fact that many Winnipeggers remain unaware of the extent of Active Transportation opportunities like the Riverbank Parkway System. The Active Transportation Study recommended meeting this challenge by implementing a Public Relations Campaign.

Next Steps

The Administration has recently submitted a report dealing with a review of the Riverbank Parkway land acquisition priority. During this review it became obvious to the Administrative Working Group that several additional issues regarding the City Riverbank Parkway System need to be reviewed including:

- The number and naming of the Parkways.
- The routing of some of the Parkways.
- The conventions regarding signage and trail standards.

Consultations with the Winnipeg Trails Association and Winnipeg Cycling Association have been conducted and they support the recommendations outlined in this report.

Renaming the Parkways

The effectiveness of having 16 different Parkways has been questioned. The current number of 16 different Parkways is confusing from a way finding perspective. It is recommended that the Parkways be condensed into 6 and be renamed as the following.

North Assiniboine Parkway In this case the existing Assiniboine, St. James, and the Assiniboia Parkways would be condensed into one. This Parkway would begin at The Forks and continue west on the north bank of the Assiniboine River up to either the Assiniboine Park entrance on Portage Avenue or Sturgeon Creek at Hamilton Ave. The decision regarding the end point of this Parkway will be considered later in this report under issues regarding routing of the Parkways.

South Assiniboine Parkway In this case the existing Fort Rouge, Assiniboine, and Charleswood Parkways would be condensed into one. This Parkway would begin at The Forks and travel west on the south bank of the Assiniboine River up to Caron Park in west Charleswood. It is important to note that the Morey Street extension, which is located along this Parkway has been formally named the Charleswood Parkway. Renaming this section of riverbank parkway the South Assiniboine Parkway would eliminate confusion around this issue.

North Winnipeg Parkway This Parkway would remain unchanged and start at The Forks and go north on the west side of the Red River up to Chief Peguis Bridge just north of Kildonan Park.

Kildonan Parkway In this case the existing Elmwood, Kildonan, and North Kildonan Parkways would be condensed into one. This Parkway would start at the forks of the Seine River and the Red River and continue north up the east side of the Red River past Bunn's Creek to the north City limits.

South Winnipeg Parkway In this case the existing Churchill, Fort Garry, Kings Park, and St. Norbert Parkways would be condensed into one. This Parkway would start at The Forks and continue south along the west bank of the Red River all the way to the floodway gates in St. Norbert.

The Boni-Vital Parkway In this case the existing St. Boniface, St. Vital and South St. Vital Parkways would be condensed into one. This Parkway would start at the fork of the Seine River and the Red River and travel south along the east bank of the Red River all the way past Maple Grove Park up to the south Perimeter Highway bridge.

Parkway Routing

There have also been concerns raised regarding the routing of some of the parkways.

Existing Assiniboia Parkway

The existing Assiniboia Parkway ran between the Portage Avenue entrance to Assiniboine Park along the north side of the Assiniboine River to St. Charles Grove located adjacent to the west Perimeter Highway. There are two routing issues that need to be resolved along this route.

Within this route are two private golf courses, Glendale Country Club and St. Charles Country Club. It is felt that the likelihood of the City acquiring riverbank access to either of these private facilities is extremely small. In addition a connection along the completed Sturgeon Creek Greenway is available to take parkway users further west. As a result it is recommended that the former Assiniboia Parkway, west of Sturgeon Creek, be deleted from the system.

The existing Assiniboia Parkway between the Portage Avenue entrance to Assiniboine Park and Sturgeon Creek ran along Portage Avenue. Portage Avenue is an extremely busy regional street and is less than ideal as a cycling or pedestrian link. It is recommended that the North Assiniboine Parkway be routed up Overdale Street, north of the Portage Avenue entrance to Assiniboine Park, to Bruce Avenue. The Parkway would continue west along Bruce Avenue to Grace Hospital and Sturgeon Creek Greenway via Booth Drive as illustrated in **Appendix B**.

Existing Charleswood Parkway

The existing Charleswood Parkway extended from Assiniboine Park along the south side of the Assiniboine River to Caron Park adjacent to the west Perimeter Highway. The section between the Moray Street extension (now formally called the Charleswood Parkway) and Shelmerdine Drive utilized Roblin Boulevard. Roblin Boulevard is an extremely busy regional street that is less than ideal as a pedestrian or cycling link. In the case of the Trans Canada Trail quiet residential streets have been identified as the route in this area. The route is illustrated in the **Appendix C**. It is recommended that the South Assiniboine Parkway utilize the same route in this area.

Existing Fort Rouge Parkway

The existing Fort Rouge Parkway extended from The Forks along the south side of the Assiniboine River to the Wellington Crescent/Maryland Bridge. Riverbank access beyond Mayfair Park, Fort Rouge Park, Munson Park, Gerald James Lynch Park, and Hugo Park will be almost impossible to acquire along the residential streets adjacent to the riverbank.. In this case the currently signed cycling routes along the one-way coupling of River Avenue and Stradbrook Avenue, as illustrated in **Appendix D**, are recommended as part of the route of the new South Assiniboine Parkway. This route would accommodate riverbank access to each of the above-named parks except in the case of Gerald James Lynch Park.

<u>Parkway and Trail Signage</u>

Now that so much of the Parkway System is usable and given that so few of Winnipeg residents are aware of the Parkway System it makes sense to take steps to publicize the system. One of the first things that will be completed is the signage for the system. Consistent signage will assist in branding the Winnipeg Parkway System. The Winnipeg Trails Association in their Strategic Trails Plan for Winnipeg recommended that a common system of easy to use, accessible trail signs be developed and installed which respect the needs of individual trail associations while integrating the overall City wide trail and Parkway system.

Templates, attached as Appendix E, have been developed and are in the process of being finalized for Parkway and Trails signage. It is intended that there be a common look to the Trailhead signs and Parkway identifier signs along the Parkways. The Trail sign as shown is intended to be a template and does not preclude individual trail associations from developing their own design insofar as the graphic is concerned.

Accessibility Criteria

The 2003 Strategic Trails Plan for Winnipeg recommended that all trails, as appropriate and possible, use the criteria of the Universal Trail Assessment Process. This supports the Universal Design Policy adopted by City Council in December 2001. In general, trails present a variety of experiences from hard packed surfaces based on abandoned rail lines, natural paths, city sidewalks etc. Standards will be set to assist individual trail associations and the City to develop a consistent approach to identifying the level of accessibility on each section of trail or Parkway. That information will be reflected in the signage for that trail improving navigation, wayfinding, usability, and safety.

Preliminary templates are attached (see Appendix E) for accessibility signage to be installed along Parkway routes. These are intended to provide an easy to read and understandable indication of upcoming trail conditions. The accessibility graphic is combined with a directional arrow at decision points in the route. The Trailhead sign route maps, illustrated in Appendix F, also indicate grade changes and potentially challenging conditions.

Trail Construction Standards

The Strategic Trails Plan for Winnipeg also recognized that different surfaces for different trails are acceptable in accordance with the surrounding environment. To this end, construction details for a variety of surfaces have been developed (see attached Appendix G). Additional details include bench nodes, wooden bollards and sign supports, and entrance plazas. It is intended that these construction standards be used not only for Parkway development but for Greenways and Trails development as well, where suitable.

Financial Impact Statement Date: March 10, 2006

COMMENTS:

The recommendations in this report are that the Parkways making up the Winnipeg Parkway System be renamed, that the routes of the North Assiniboine Parkway and the South Assiniboine Parkways be changed, and that the signage, accessibility and trail construction standards be endorsed as outlined in the report. There are no direct financial implications associated with these recommendations.

"Original signed by"
Mike McGinn, CA
Manager of Finance

IN PREPARING THIS REPORT, THERE WAS CONSULTATION WITH AND CONCURRENCE BY:

The Winnipeg Trails Association

The Public Works Department

Environmental Coordinator, Strategic Management Division, Chief Administrative Officer Secretariat

THIS REPORT SUBMITTED BY:

Planning, Property and Development Department
Division: Planning and Land Use
Prepared by: Kevin Nixon, Park Strategic Planner
PPD File #:

Document name: O:\Reports Directive\Planning and Land Use\Parks, Riverbanks and Community Initiatives\Kevin Nixon\Winnipeg Parkway System.doc

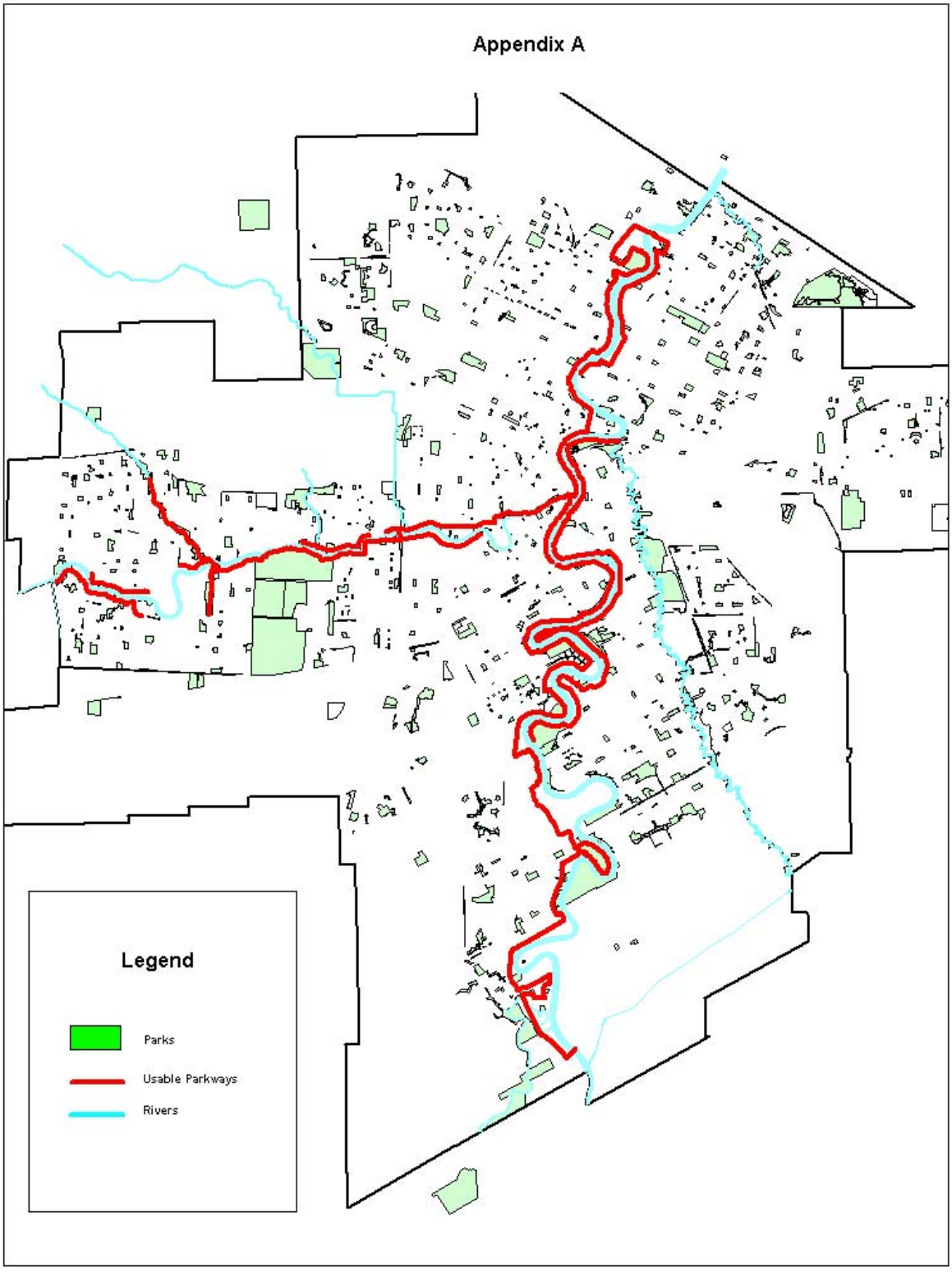
Appendix A
Legend
Parks
Usable Parkways
Rivers

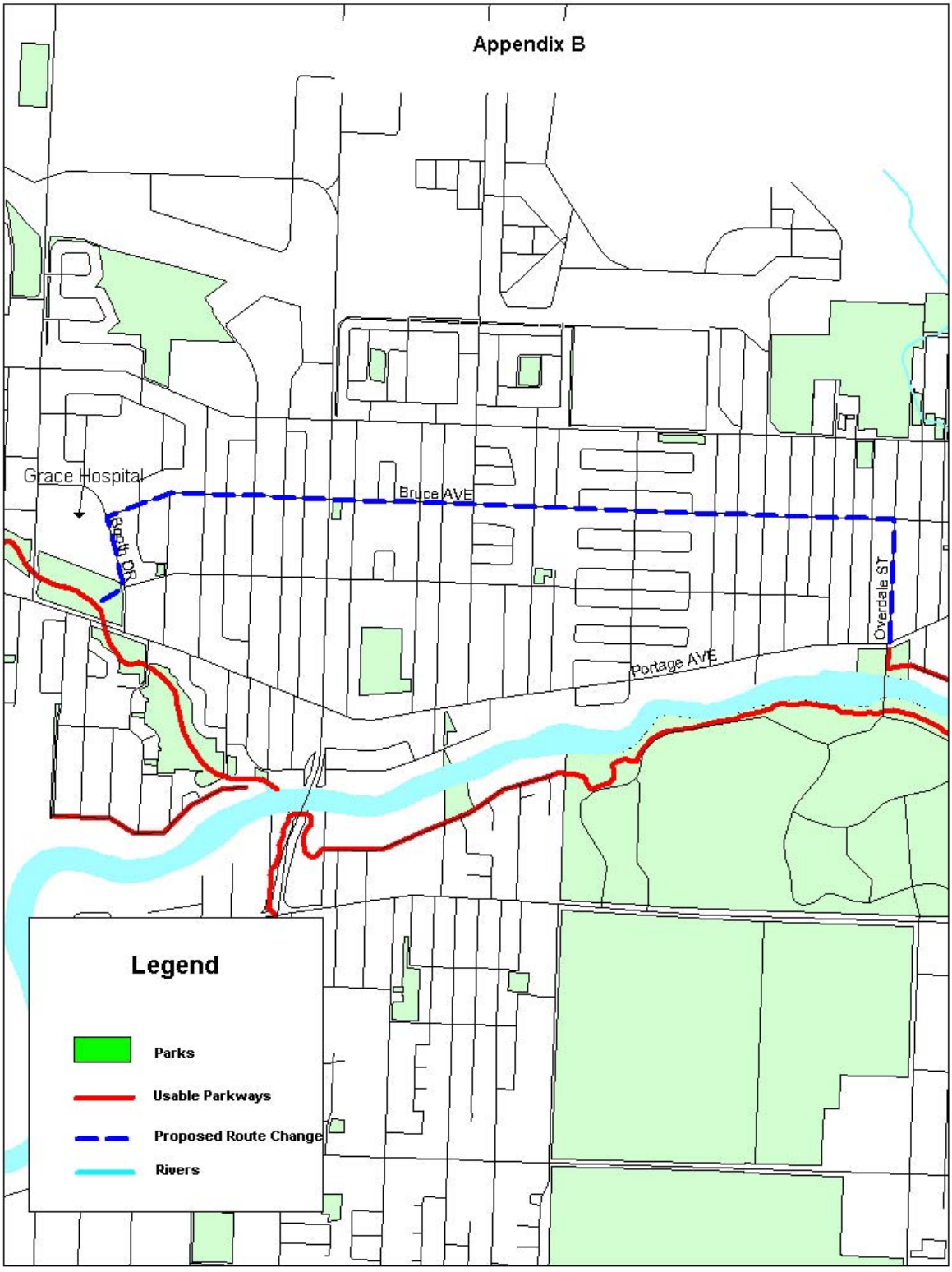
Appendix B
Grace Hospital
Bruce AVE
Bandy DR
Overdale ST
Portage AVE
Legend
Parks
Usable Parkways
Proposed Route Change
Rivers

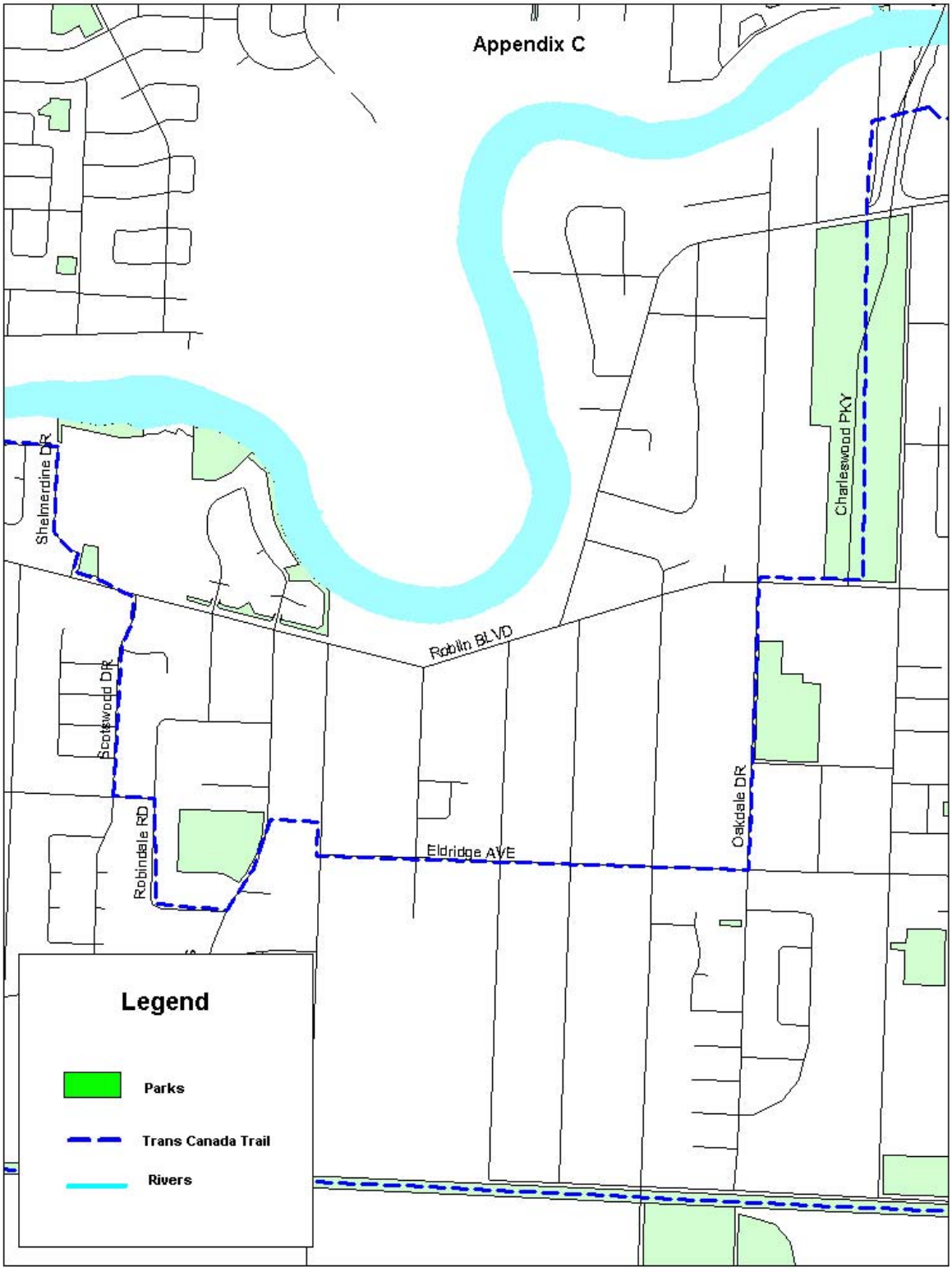
Appendix C
Shelmerdine DR
Scotswood DR
Robindale RD
Robin BLVD
Eldridge AVE
Oakdale DR
Charleswood PKY
Legend
Parks
Trans Canada Trail
Rivers

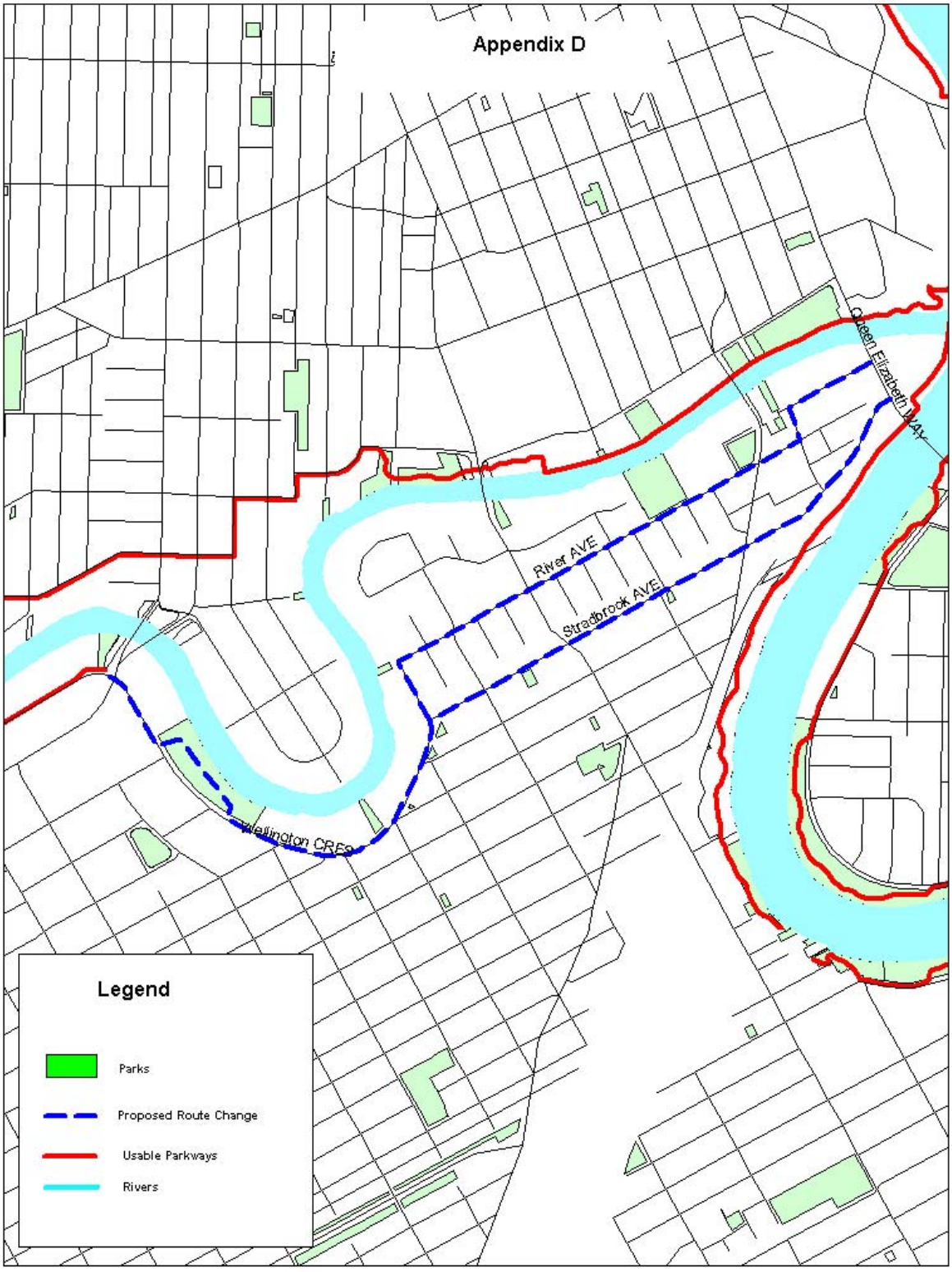
Appendix D
Queen Elizabeth Way
River AVE
Stradbrook AVE
Wellington CRES
Legend
Parks
Proposed Route Change
Usable Parkways
Rivers

Appendix E

Preliminary Templates for Parkway ID Signs, Trails Signs and Accessibility/Directional Signs

Parkway ID sign - installed along length of Parkway route.



Trail sign - Trail may occur concurrent to Parkway route (eg. Cloutier Trail) or as separate route (eg. Harte Trail).

Accessibility Sign - Includes accessibility indication as well as directional arrow.

Accessibility Signage Legend

Accessible: Based on Universal Trail Assessment criteria.

Useable: Allows significant access. Some individuals with disabilities may have difficulty and need assistance.

Non-Accessible: Does not meet Universal Trail Assessment criteria.

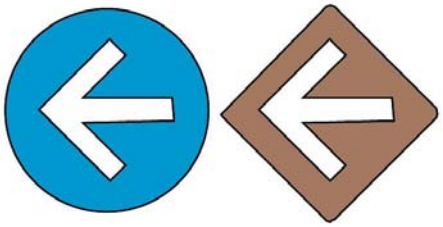

Appendix F


South Winnipeg Parkway
Churchill Drive
Boni-Vital Parkway
Boni-Vital Parkway
The Forks
You Are Here
Steep Slope
Steep Slope
Steep Slope
Rough Roadway
Red River
Churchill Drive segment of South Wpg. Parkway
N.Assiniboine Parkway
S. Assiniboine Parkway
S. Wpg. Parkway
Wildewood Golf Club
Mb. Legislative Bldg.
Churchill Drive
parkway route
trailhead
park/open space
Pathway Conditions
Type 1 - asphalt/concrete, minor grade changes
Type 2 - compacted gravel, minor grade changes
Type 3 - rough surface/ uneven grade
Type 4 - steep slope
250m 0 250m 500m 1km
Share the Path!
Winnipeg
Winnipeg Riverbank Parkway System
N. Winnipeg Parkway
North Assiniboine Parkway
Kildonan Parkway
South Assiniboine Parkway
Boni-Vital Parkway
South Winnipeg Parkway
Parkway System

Appendix G

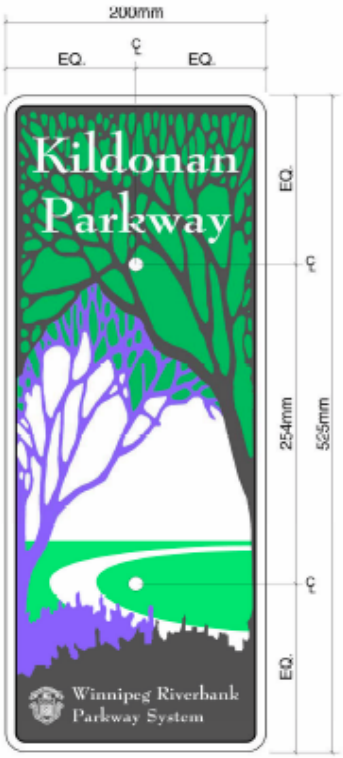

Typical
Route Identifier Sign
quantity as specified
three transparent colours
on white reflective backing
two bolt holes

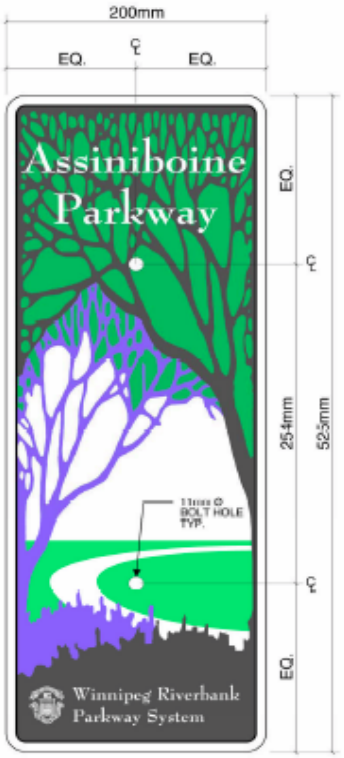

Typical
Route Identifier Sign
quantity as specified
three transparent colours
on white reflective backing
two bolt holes



Vinyl Lettering Decal Sheet A
reflective white vinyl, adhesive backing
one sheet per 2 - 3 fiches, depending
on distances - 32 sheets total

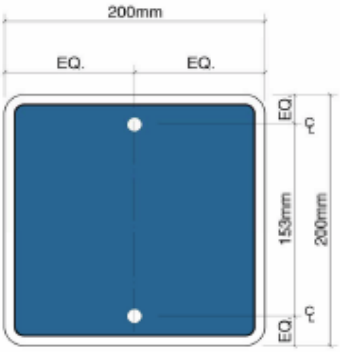

Distance and Directional Fiche
quantity as specified
two transparent colours
on white reflective backing
two bolt holes.
text and graphic varies and will be
affixed by others.

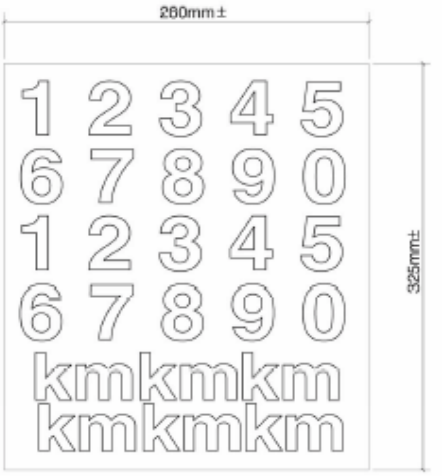

Vinyl Lettering Decal Sheet B
reflective white vinyl, adhesive backing
one sheet per 2 - 3 fiches, depending
on distances - 12 sheets total

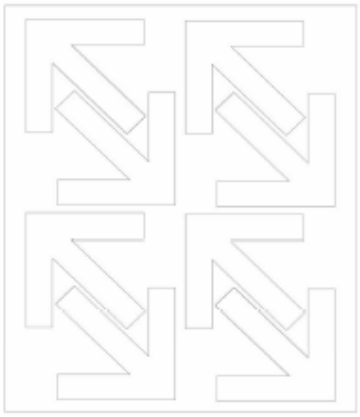

Vinyl Lettering Decal Sheet C
reflective white vinyl, adhesive backing
one sheet per 8 fiches - 24 sheets total





Trailhead Sign - Wood Option

Winnipeg Riverbank Parkway System

TITLE

CRUSHED LIMESTONE WALKWAY DETAIL

SCD-624A

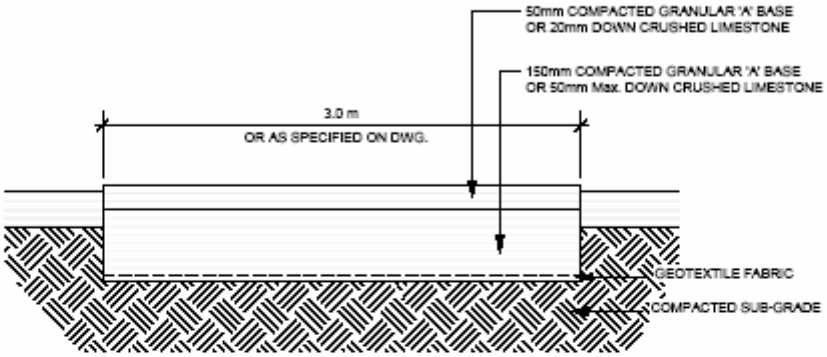

NOT TO SCALE
DATE :May, 2004
DRAWN BY : CH

THE CITY OF WINNIPEG
Planning,Property and Development Department
Planning and Land Use Division
Unit 15 - 10 Fort Street, Winnipeg, MB, R3C 4X5

Winnipeg

TITLE

TYPICAL ASPHALT PATHWAY DETAIL

D

SCD-642

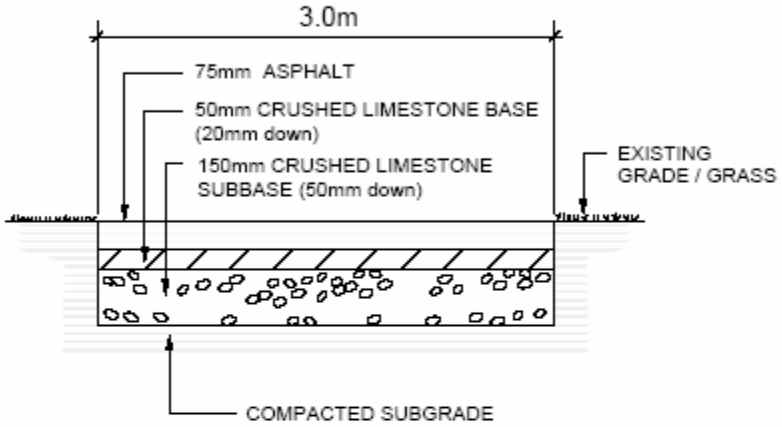

NOT TO SCALE
DATE : JUNE, 2002
DRAWN BY : VC

THE CITY OF WINNIPEG
Planning,Property and Development Department
Planning and Land Use Division
Unit 15 - 10 Fort Street, Winnipeg, MB, R3C 4X5

Winnipeg

TITLE
TYPICAL WOOD MULCH PATHWAY
PARK PATHWAY

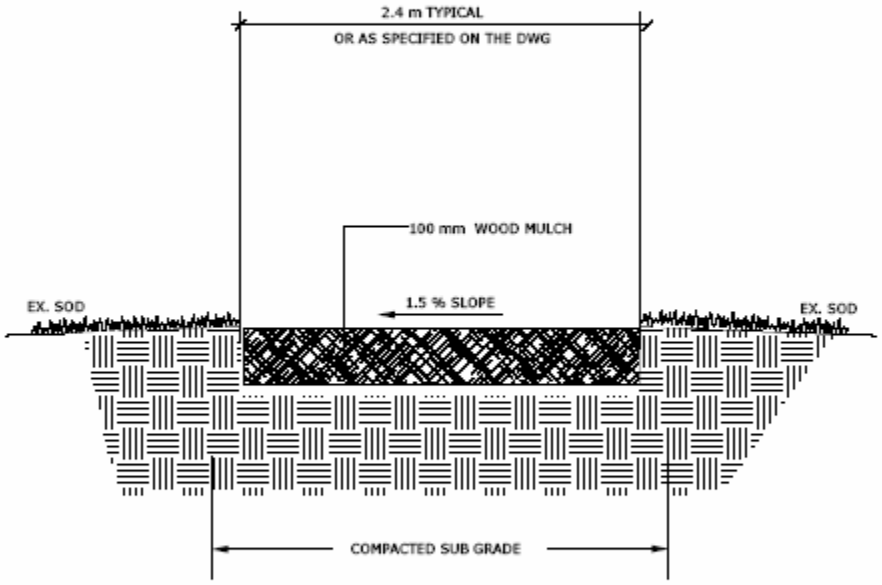

Scale: n.t.s.
Drawn By: j.f.
Date: Mar./06

THE CITY OF WINNIPEG
Planning, Property and Development Department
Planning and Land Use Division
15 - 30 Fort Street, Winnipeg, Manitoba R3C 4X5

TITLE

[D]

BENCH NODE DETAIL

SCD 136

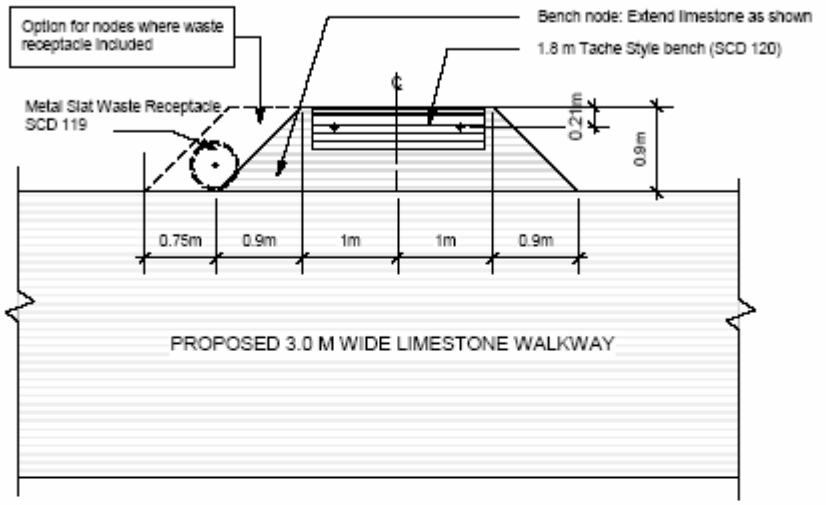

PLAN 1:50

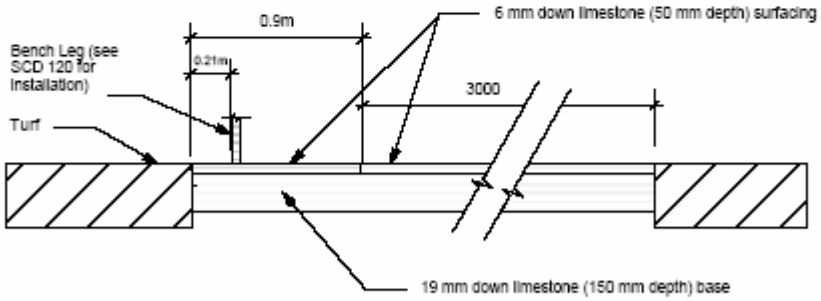

SECTION 1:25

THE CITY OF WINNIPEG
Property and Development Services Department
Planning and Land Use Division
2799 Roblin Blvd., Winnipeg, Manitoba R3R 0B8

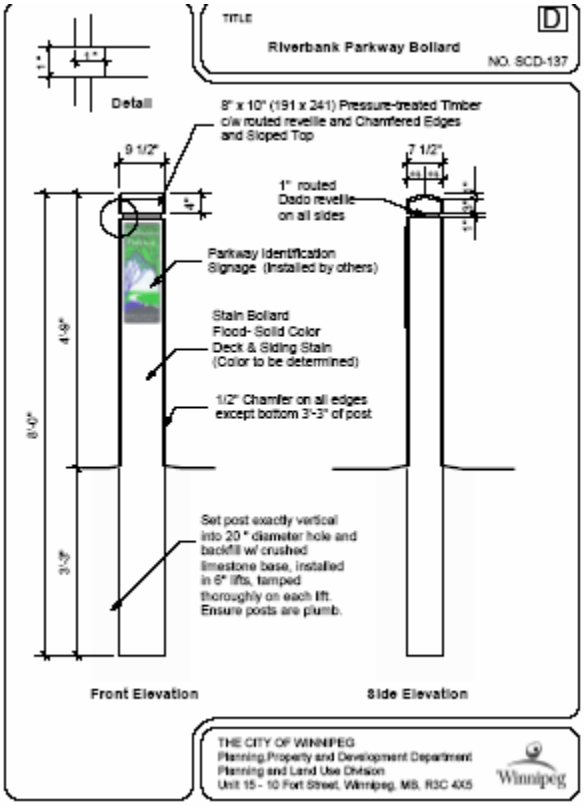
TITLE
Riverbank Parkway Bollard
D
NO. SCD-137
Detail
8" x 10" (191 x 241) Pressure-treated Timber c/w routed reveille and Chamfered Edges and Sloped Top
9 1/2"
7 1/2"
1" routed Dado reveille on all sides
Parkway Identification Signage (Installed by others)
Stain Bollard Flood- Solid Color Deck & Siding Stain (Color to be determined)
1/2" Chamfer on all edges except bottom 3'-3" of post
8'-0"
4'-9"
3'-3"
Set post exactly vertical into 20 " diameter hole and backfill w/ crushed limestone base, installed in 6" lifts, tamped thoroughly on each lift. Ensure posts are plumb.
Front Elevation
Side Elevation
THE CITY OF WINNIPEG
Planning,Property and Development Department
Planning and Land Use Division
Unit 15 - 10 Fort Street, Winnipeg, MB. R3C 4X5
Winnipeg

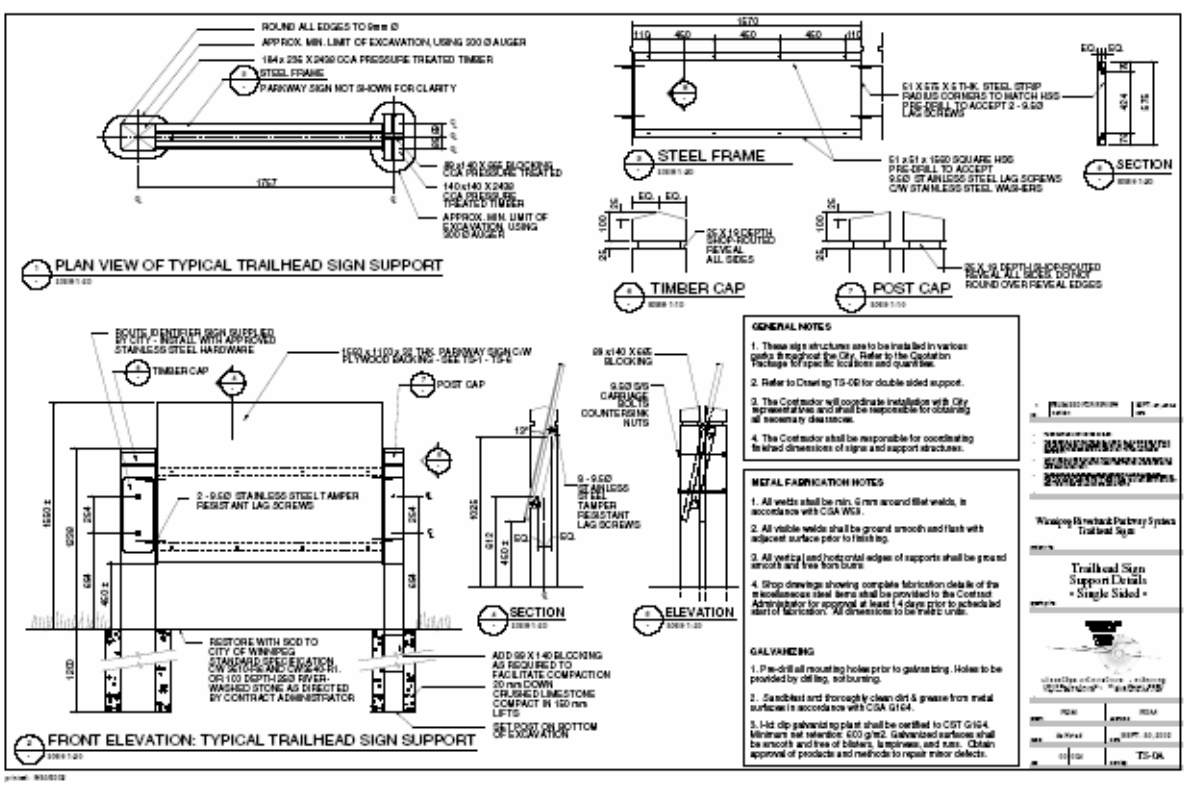
ROUND ALL EDGES TO 6mm Ø
APPROX. MIN. LIMIT OF EXCAVATION, USING 300 Ø AUGER
184 x 235 X 2438 CCA PRESSURE TREATED TIMBER
STEEL FRAME
PARKWAY SIGN NOT SHOWN FOR CLARITY
89 x140 X 685 BLOCKING C/W PRESSURE TREATED
140 x140 X 2438 CCA PRESSURE TREATED TIMBER
APPROX. MIN. LIMIT OF EXCAVATION, USING 600 Ø AUGER
1767
PLAN VIEW OF TYPICAL TRAILHEAD SIGN SUPPORT
1670
110
460
460
460
110
51 X 6.35 X 5 THK. STEEL STRIP RADIUS CORNERS TO MATCH HSS PRE-DRILL TO ACCEPT 2 - 9.5Ø LAG SCREWS
51 x 51 x 1590 SQUARE HSS PRE-DRILL TO ACCEPT 9.5Ø STAINLESS STEEL LAG SCREWS C/W STAINLESS STEEL WASHERS
STEEL FRAME
EQ.
EQ.
SECTION
35 X 9 DEPTH SHOP-ROUTED REVEAL ALL SIDES
TIMBER CAP
35 X 19 DEPTH SHOP-ROUTED REVEAL ALL SIDES DISTRICT ROUND OVER REVEAL EDGES
POST CAP
ROUTE IDENTIFICATION SUPPLIED BY CITY - INSTALL WITH APPROVED STAINLESS STEEL HARDWARE
TIMBER CAP
1590 x 1100 x 20 THK. PARKWAY SIGN C/W PLYWOOD BACKING - SEE TS-01 - TS-5
POST CAP
2 - 9.5Ø STAINLESS STEEL TAMPER RESISTANT LAG SCREWS
1590
1220
254
654
403
RESTORE WITH SOD TO CITY OF WINNIPEG STANDARD DEPTH EXCAVATION C/W 100 TOPSOIL AND 40 RI. OR 100 DEPTH 20/0 RIVER-WASHED STONE AS DIRECTED BY CONTRACT ADMINISTRATOR
ADD 89 X 140 BLOCKING AS REQUIRED TO FACILITATE COMPACTION
20 mm DOWN CRUSHED LIMESTONE COMPACT IN 150 mm LIFTS
SET POST ON BOTTOM OF EXCAVATION
FRONT ELEVATION: TYPICAL TRAILHEAD SIGN SUPPORT
89 x140 X 685 BLOCKING
9.5Ø S/S CARRIAGE BOLTS C/W COUNTERSINK NUTS
12°
9 - 9.5Ø STAINLESS STEEL TAMPER RESISTANT LAG SCREWS
1025
812
460
EQ.
SECTION
ELEVATION
GENERAL NOTES
1. These sign structures are to be installed in various parks throughout the City. Refer to the Quotation Package for specific locations and quantities.
2. Refer to Drawing TS-05 for double sided support.
3. The Contractor will coordinate installation with City representatives and shall be responsible for obtaining all necessary clearances.
4. The Contractor shall be responsible for coordinating finished dimensions of signs and support structures.
METAL FABRICATION NOTES
1. All welds shall be min. 6 mm around fillet welds, in accordance with CSA W59.
2. All visible welds shall be ground smooth and flush with adjacent surface prior to finishing.
3. All vertical and horizontal edges of supports shall be ground smooth and free from burrs.
4. Shop drawings showing complete fabrication details of the miscellaneous steel items shall be provided to the Contract Administrator for approval at least 14 days prior to scheduled start of fabrication. All dimensions to be in SI/IS units.
GALVANIZING
1. Pre-drill all mounting holes prior to galvanizing. Holes to be provided by drilling, not burning.
2. Sandblast and thoroughly clean dirt & grease from metal surfaces in accordance with CSA G164.
3. Hot dip galvanize top plate shall be certified to CST G164. Minimum zinc retention: 600 g/m2. Galvanized surfaces shall be smooth and free of blisters, lumpiness, and runs. Obtain approval of products and methods to repair minor defects.
Winnipeg Riverbank Parkway System Trailhead Sign
Trailhead Sign Support Details - Single Sided -
TS-04

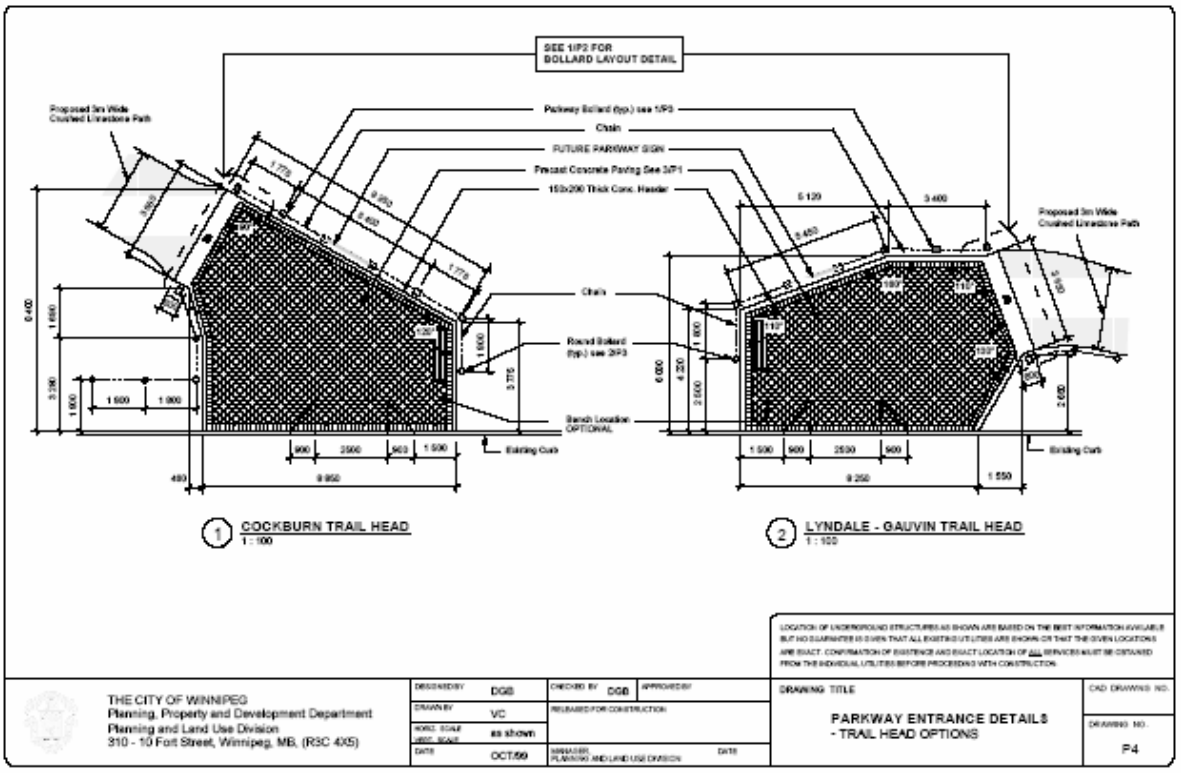
SEE 1/P2 FOR
BOLLARD LAYOUT DETAIL
Proposed 3m Wide
Crushed Limestone Path
Parkway Bollard (typ.) see 1/P3
Chain
FUTURE PARKWAY SIGN
Precast Concrete Paving See 3/P1
150x200 Thick Conc. Header
Chain
Round Bollard
(typ.) see 2/P3
Bench Location
OPTIONAL
Existing Curb
1 COCKBURN TRAIL HEAD
1 : 100
2 LYNDALE - GAUVIN TRAIL HEAD
1 : 100
LOCATION OF UNDERGROUND STRUCTURES AS SHOWN ARE BASED ON THE BEST INFORMATION AVAILABLE
BUT NO GUARANTEE IS GIVEN THAT ALL EXISTING UTILITIES ARE SHOWN OR THAT THE GIVEN LOCATIONS
ARE EXACT. CONFIRMATION OF EXISTENCE AND EXACT LOCATION OF ALL SERVICES MUST BE OBTAINED
FROM THE INDIVIDUAL UTILITIES BEFORE PROCEEDING WITH CONSTRUCTION.
THE CITY OF WINNIPEG
Planning, Property and Development Department
Planning and Land Use Division
310 - 10 Fort Street, Winnipeg, MB, (R3C 4X5)
DESIGNED BY DGB
DRAWN BY VC
HORZ. SCALE as shown
VERT. SCALE
DATE OCT/99
CHECKED BY DGB
APPROVED BY
RELEASED FOR CONSTRUCTION
MANAGER, PLANNING AND LAND USE DIVISION
DATE
DRAWING TITLE
PARKWAY ENTRANCE DETAILS
- TRAIL HEAD OPTIONS
CAD DRAWING NO.
DRAWING NO.
P4