Agenda – Executive Policy Committee – September 21, 2006

REPORTS

Item No. 5 Wilkes Avenue Snow Dump – Additional Funding to Upgrade
File ST-1.1

STANDING COMMITTEE RECOMMENDATION:

On September 12, 2006, the Standing Policy Committee on Infrastructure Renewal and Public Works referred the following to the Executive Policy Committee for favourable consideration, namely:

1. That additional funding in the approximate amount of $75,000.00 be allocated to upgrade the Wilkes Avenue snow dump in order to facilitate the closing of the Highwood Street snow dump disposal site.

DECISION MAKING HISTORY:

STANDING COMMITTEE DECISION:

On September 12, 2006, the Standing Policy Committee on Infrastructure Renewal and Public Works concurred in the administrative recommendation, as amended, namely:

1. That there be no change to the existing Full-Time Truck Route designation on Saskatchewan Avenue between Provincial Trunk Highway No. 101 and Sturgeon Road at this time.

2. That Saskatchewan Avenue be included as a candidate location for street renewal when programming future City of Winnipeg Capital Street Renewal Projects.

3. That the Highwood Street snow dump disposal site not be operated during the 2006/2007 winter season.

Further, on September 12, 2006, the Standing Policy Committee on Infrastructure Renewal and Public Works considered the following communications and/or submissions with respect to the removal of truck traffic from Saskatchewan Avenue, namely:

- Earl Robinson, September 4, 2006
- Bob Dolyniuk, General Manager, Manitoba Trucking Association - September 5, 2006
- Cheryl Robinson - September 7, 2006
- Joe Lamboo - September 10, 2006
- Bill and Wesley Matthews - September 11, 2006
- Bob Dolyniuk, General Manager, Manitoba Trucking Association - September 12, 2006
- Trish Boch - September 12, 2006 and other supporting documentation including a petition dated May 12, 2006

STANDING COMMITTEE RECOMMENDATION:

On September 12, 2006, the Standing Policy Committee on Infrastructure Renewal and Public Works referred the following to the Executive Policy Committee for favourable consideration, namely:

1. That additional funding in the approximate amount of $75,000.00 be allocated to upgrade the Wilkes Avenue snow dump in order to facilitate the closing of the Highwood Street snow dump disposal site.

RE: SASKATCHEWAN AVENUE – PROPOSED REMEDIAL TRAFFIC MEASURES

FOR SUBMISSION TO: The Standing Policy Committee on Infrastructure Renewal and Public Works

ORIGINAL REPORT SIGNED BY: L.S.W. Larkin, P. Eng., Director of Public Works

REPORT DATE: September 5, 2006

RECOMMENDATION:

That:

1. There be no change to the existing Full-Time Truck Route designation on Saskatchewan Avenue between Provincial Trunk Highway No. 101 and Sturgeon Road at this time.

2. Saskatchewan Avenue be included as a candidate location for street renewal when programming future City of Winnipeg Capital Street Renewal Projects.

3. The snow disposal site currently located on Highwood Street remain open for this upcoming winter but that the Streets Maintenance Division of the Public Works Department be requested to develop a long term management strategy to meet the City's future requirements for environmentally engineered permanent snow disposal sites that would include consideration of closing the existing Highwood Street snow disposal site.

Report Summary

Key Issues:

- Residents south of Saskatchewan Avenue between Provincial Trunk Highway No. 101 and Sturgeon Road have complained about vibration to their homes generated by trucks traveling at high speeds over the breaks and potholes on the Saskatchewan Avenue roadway.

Implications of the Recommendation(s):

General Implications

None
For the organization overall and/or for other departments
X For the community and/or organizations external to the City

Involves a multi-year contract

Comment(s): Repairing the pavement breaks and potholes on Saskatchewan Avenue will decrease the potential for truck-generated noise and vibrations.

Policy Implications

X No

Yes

Comment(s):

Regulatory Implications

X None

Eliminates or reduces regulatory impact

Proposes regulatory impact

Comment(s):

Environmental Implications

X No

Yes

Comment(s):

Human Resources Implications

X No

Yes

Comment(s):

Financial Implications

X Within approved current and/or capital budget

Current and/or capital budget adjustment required

Comment(s):

Report

REASON FOR THE REPORT AND HISTORY:

At their meeting on March 14, 2006, the Assiniboia Community Committee recommended to the Standing Policy Committee on Infrastructure Renewal and Public Works that the Public Works Department be requested to investigate and report back to the Standing Policy Committee on Infrastructure Renewal and Public Works with respect to the following:

i) Options to reduce the speed limit from the existing 70 km/h.
ii) Determine through origin-destination analysis the option of reducing Saskatchewan Avenue to a Part-Time Truck Route.
iii) Develop a repair schedule for Saskatchewan Avenue to mitigate the vibrations to adjacent homes.
iv) Investigate the potential for relocating the snow dump currently located at Highwood Street, to an alternate location.

At its meeting on April 11, 2006, The Standing Policy Committee on Infrastructure Renewal and Public Works recommended that the Administration:

a) be authorized to apply to The Highway Traffic Board of Manitoba to reduce the speed limit on Saskatchewan Avenue between Sturgeon Road and Cavalier Drive from 70 km/h to 60 km/h;
b) review and report back on determining through origin-destination analysis the option of deleting Saskatchewan Avenue as a Full-Time Truck Route and designating it as a Part-Time Truck Route;
c) review and report back on developing a repair schedule for Saskatchewan Avenue to mitigate the vibrations to the adjacent homes; and
d) review and report back on investigating the potential for relocating the snow dump currently located at Highwood Street, to an alternate location.

At its meeting on June 20, 2006, the Assiniboia Community Committee recommended to the Standing Policy Committee on Infrastructure Renewal and Public Works that:

1) the Public Works Department be requested to re-apply to The Highway Traffic Board of Manitoba to reduce the speed limit on Saskatchewan Avenue between Sturgeon Road and Cavalier Drive from 70 kilometres per hour to 60 kilometres per hour.

2) the Public Works Department be requested to review the presentation of Tricia Boch and report back to the Standing Policy Committee on Infrastructure Renewal and Public Works on the following, in conjunction with the April 11, 2006, request of the Standing Policy Committee:

A. Relocate the Highwood Snow Dump to such a place that its new location will not promote the use of Saskatchewan Avenue by snow hauling trucks in the future.

B. Close the snow dump service road (Highwood Street.) – to prevent this road from being used by another type of trucking facility in the future.

C. Construct two alternate entrances to the Summit Road Land Fill – so that Saskatchewan Avenue will not be used by trucks hauling clean fill for the next 20 years.

D. Stop permitting Saskatchewan Road to be used by:

• Heavy weight semi-trailers 36,500 kg – 62,500 kg;
• All forms of commercial trucks 36,000 kg and less;
• Snow hauling trucks;
• Clean-fill hauling trucks.

E. Impose a vehicle weight restriction on Saskatchewan to a maximum of 32,500 kg.

F. Develop the proper road infrastructure required for trucks, by installing construction of the Airport Expressway according to Plan Winnipeg 2020, within the immediate future.

At their meeting on July 11, 2006, the Standing Policy Committee on Infrastructure Renewal and Public Works concurred in the recommendation of the Assiniboia Community Committee, as amended, namely:

1. That the Public Works Department be requested to re-apply to The Highway Traffic Board of Manitoba to:

A. Decrease the existing 70 km/hour speed limit to 60 km/hour on Saskatchewan Avenue between P.T.H. No 101 and Moray Street, and

B. Increase the existing 50 km/hour speed limit to 60 km/hour on Saskatchewan Avenue from Moray Street to Wihuri Road.

DISCUSSION:

A) Speed limit:

As instructed by the Standing Policy Committee on Infrastructure Renewal and Public Works, the Public Works Department applied to The Highway Traffic Board of Manitoba

to decrease the speed limit on Saskatchewan Avenue between Sturgeon Road and Cavalier Drive from 70 km/h to 60 km/h. The matter was considered by the Board at a public hearing on May 13, 2006. It is noted that the date, time and place of the public hearing were publicized in Winnipeg's major newspaper as well as community newspapers to ensure that the public had an opportunity to present their evidence in support of the application or otherwise. After considering the City's application and public representation as well as conducting their own field observation of the street, the Board ruled that there be no change in the existing 70 km/h speed limit on Saskatchewan Avenue at this time for the reasons stated in the attached letter dated June 16, 2006 from The Highway Traffic Board addressed to Diana Emerson, P.Eng., MCIP, Traffic Management Engineer. A copy of this letter is provided in Appendix A.

As stated in the "Reason for and History" above, at its meeting on June 20, 2006, the Assiniboia Community Committee recommended to the Standing Policy Committee on Infrastructure Renewal and Public Works that, amongst other things, the Public Works Department be requested to re-apply to The Highway Traffic Board of Manitoba to reduce the speed limit on Saskatchewan Avenue between Sturgeon Road and Cavalier Drive from 70 km/h to 60 km/h. On July 11, 2006, the Standing Policy Committee on Infrastructure Renewal and Public Works passed the following motion:

1. That the Public Works Department be requested to re-apply to The Highway Traffic Board of Manitoba to:

A. Decrease the existing 70 km/hour speed limit to 60 km/hour on Saskatchewan Avenue between P.T.H. No 101 and Moray Street, and

B. Increase the existing 50 km/hour speed limit to 60 km/hour on Saskatchewan Avenue from Moray Street to Wihuri Road.

The Public Works Department has since made such an application to the Board and has been notified by the Board that this request will be considered at a public hearing to be held on August 29, 2006. At the time of writing this report, the Board had verbally confirmed that these requested speed limit changes were, in fact, approved. A formal, written confirmation to the Department from the Board on this matter is forthcoming.

Aerial site plans of Saskatchewan Avenue between P.T.H. 101 and Wihuri Road are provided in Appendix B.

B) Origin-Destination of Trucks on Saskatchewan Avenue and Implications of Designating Saskatchewan Avenue as a Part-Time Truck Route:

i) History of Saskatchewan Avenue as a Truck Route -

1) Initially established as a Truck Route in the mid 1960's (approximately).

In the late 1950's, there existed various forms of Truck Routes and control of trucking in the former cities and municipalities that now comprise The City of Winnipeg. During the 1960's, the more major streets of the then Metropolitan Street System, including Saskatchewan Avenue, were Truck Routes. In the mid-1970's, a consolidated City-wide Truck Route System was proposed. The report promoting the consolidation of existing by-laws on truck regulation and rationalization of Truck Routes City-wide, is titled "Control of Trucking in the City of Winnipeg - An Examination of the Control of Trucking Operations in the City of Winnipeg", by the Transportation Division, authored by H.F. Burns, P.Eng., Director of Transportation, 1973. This report was circulated to various Community Committees before the recommendations contained therein were adopted by Council.

It was recognized that trucks cannot be prohibited from using City streets. However, their use of City streets can be regulated. The purpose of a Truck Route system in such a proposal was to develop an equitable Truck Route system City-wide for through truck traffic, and to reduce the economic and environmental impact of trucks on residential streets. Such routes generally had been Regional Streets that are designed and constructed to a higher standard than residential streets, since they carry higher volumes of traffic and vehicles of a higher gross vehicle weight than is normally experienced on residential streets. The Truck Route provisions in The City of Winnipeg Traffic By-law No. 1573/77 was the result of such a process. Saskatchewan Avenue, along with numerous other Regional Streets, was included as a Full-Time Truck Route in this by-law, which was adopted by Council on April 6, 1977.

2) Changed to a Part-Time Truck Route on January 17, 1984.

A change from a Full-Time to a Part-Time Truck Route was initiated by Councillor Ernst when he advised the St. James-Assiniboia Community Committee of a number of complaints about truck-generated noise, particularly in the evening, received from residents living south of Saskatchewan Avenue. Communications on this matter include a report titled "Saskatchewan Avenue as a Truck Route" dated September 28, 1983 from the Director of Streets and Transportation to the Committee on Works and Operations and report of the Committee on Works and Operations, dated October 4th, 1983 titled "Designation of Saskatchewan Avenue as a Part-Time Truck Route-File ST-5.2", the recommendations of which were adopted by Council on October 19, 1983.

3) Established as a Full-Time Truck Route on January 27, 1999.

A change from a Part-Time to a Full-Time Truck Route was in response to a request from Ross Adamson, P.Eng., a Consultant representing Winnport International Air Cargo Logistics, 204-2000 Wellington Avenue. The request to change Saskatchewan Avenue from a Part-Time to a Full-Time Truck Route was predicated on the need to enhance the routing options for trucks oriented to the commercial area in, and near, the

Murray Industrial Park, particularly given that that the structure on the Sturgeon Road crossing of Sturgeon Creek is restricted to a maximum gross vehicle weight of 36,500 kg, being considerably less than the 62,500 kg maximum permitted on City streets.

Communications dealing with the change from a Part-Time to Full-Time Truck Route include: Report to The Standing Policy Committee on Public Works, titled "Truck Routes in the St. James and Assiniboia Communities", dated October 13, 1998 by the Director of Public Works; and inter-office memorandum to Councillor Peter De Smedt, titled "Traffic on Saskatchewan Avenue", dated November 20, 2001 by the Manager of Transportation.

ii) RTAC Trucks -

There has been some concerns raised by residents backing onto Saskatchewan Avenue with respect to the ability for RTAC trucks to use Saskatchewan Avenue.

Section 68(1) of The Highway Traffic Act of Manitoba specifies that a "class A highway" means any highway under the jurisdiction of The City of Winnipeg. Manitoba Regulation 575/88, being a Regulation of The Highway Traffic Act of Manitoba with respect to Vehicle Weights and Dimensions on Classes of Highways Regulations, specifies a maximum gross vehicle weight of 36,500 kilograms on a "class A highway". Section 68(9) of The Highway Traffic Act allows a municipality to pass a by-law increasing or decreasing the weight of vehicles on its streets, subject to approval of The Highway Traffic Board. The City of Winnipeg permits a maximum gross vehicle weight of 62,500 kg as described in the following discussion.

RTAC vehicles are those vehicles defined by size and weight limits in the Memorandum of Understanding adopted Canada-wide on September 14, 1988 by the Council of Ministers of Transportation and Highway Safety.

RTAC vehicles consist of:

- 2 and 3 axle single chassis trucks with a maximum gross vehicle weight of 16,400 kilograms on a 2 axle unit and 24,300 kilograms on a 3 axle unit;
- 2 and 3 axle single chassis trucks in combination with a 1 and 3 axle pony trailer, with a maximum gross vehicle weight ranging from 25,500 kilograms on a 3 axle unit and 45,300 kilograms on a 6 axle unit;
- 2 and 3 axle single chassis trucks in combination with a 2 and 5 axle full trailer, with a maximum gross vehicle weight ranging from 17,000 kilograms on a 4 axle unit and 62,500 kilograms on an 8 axle unit;
- 3 to 6 axle truck-tractor single semi-trailer vehicles, with a maximum gross vehicle weight ranging from 23,700 kilograms on a 3 axle unit and 46,500 kilograms on a 6 axle unit;
- 5 to 10 axle "A" Train combination truck-tractor semi-trailer vehicles, consisting of two trailers connected with an "A" hitch, with a maximum gross vehicle weight

ranging from 39,700 kilograms on a 5 axle unit and 53,500 kilograms on a 10 axle unit;
- 7 to 8 axle “B” Train combination truck-tractor semi-trailer vehicles, consisting of two trailers connected with an “B” hitch, with a maximum gross vehicle weight ranging from 56,500 kilograms on a 7 axle unit and 62,500 kilograms on an 8 axle unit; and
- 6 to 10 axle “C” Train combination truck-tractor semi-trailer vehicles, consisting of two trailers connected with an “C” hitch, with a maximum gross vehicle weight ranging from 49,800 kilograms on a 6 axle unit and 53,500 kilograms on a 10 axle unit.

As shown above, the maximum allowable gross vehicle weight of an RTAC vehicle ranges from 16,400 kilograms for a 2 axle single chassis truck to 62,500 kilograms for a single chassis truck in combination with a full trailer and an 8 axle “B” Train combination truck-tractor semi-trailer vehicle. The maximum allowable length of RTAC vehicles ranges from 12.5 metres for a single chassis truck to 25.0 metres for an “A”,”B”, and “C” Train combination truck-tractor semi-trailer vehicle. Appendix C contains illustrations of RTAC and non-RTAC vehicles including gross vehicle weights, vehicle length and axle spacings.

By way of comparison, the maximum allowable gross vehicle weight of a non-RTAC vehicle ranges from 16,400 kilograms for a 2 axle single chassis truck to 55,300 kilograms for an 8 axle truck and full trailer combination vehicle. The maximum allowable length of non-RTAC vehicles ranges from 12.5 metres for a single chassis truck to 23.0 metres for a truck and full trailer combination vehicle and for a “A”, “B”, and “C” Train combination truck-tractor semi-trailer vehicle.

Characteristics for an RTAC truck are specified in the Regulation, including the maximum vehicle width, trailer track width, the vehicle length, vehicle front and rear projections, axle groups, axle spreads, the maximum weight on the steering axle, tandem axle, and tridem axle, the maximum weight per millimetre of tire width, as well as the gross vehicle weight.

Stability and control are key factors designed into RTAC trucks, the net result of which is superior performance and response in emergency situations, particularly when operated at urban speeds such as on the streets of Winnipeg. A minimum track width of 2.5 metres (maximum of 2.6 metres) is specified for the trailers, resulting in a more stable operating condition than may be the case for a non-RTAC vehicle. **Additionally, the construction of an RTAC vehicle is such that the load is transferred more uniformly onto the pavement. Tridem axles, which are exclusive to RTAC trucks, enables better distribution of loads on the axle group, thereby making a load on a tridem axle less damaging on the pavement than that of a tandem axle on a non-RTAC vehicle.**

As described above, it is only a single chassis truck in combination with a full trailer and an RTAC "B" Train combination truck-tractor semi-trailer vehicle that can legally have the higher gross vehicle weight of 62,500 kilograms. It should be noted that of the RTAC truck-tractor semi-trailer combination vehicles, many consist of "B" Trains, being a combination vehicle with a coupler between the trailers that consists of a coupling device securely attached to the chassis of the lead semi-trailer vehicle and which will accept a semi-trailer king pin inserted through the device and will lock the kingpin in position to allow rotation in a horizontal plane through the coupling device. Such a hitching arrangement minimizes the potential for trucks susceptible to roll over. This is attributable to the fact that the "B" coupler is more stable than an "A" coupler, being a hitch with a single pintle connection, or a "C" coupler, being a hitch with 2 pintle connections. Use of an "A" coupler and a "B" coupler allows for a higher degree of interchangeability between semi-trailer and truck tractor units, while combination vehicles connected with a "B" coupler tend to have the trailers so connected on a more permanent basis such as in the case of RTAC "B" Train combination truck-tractor semi-trailer vehicles that carry fuel, grain, powder cement, etc. as examples.

For a number of years, the City of Winnipeg Traffic By-law No.1573/77 allowed the operation of vehicles with a gross vehicle weight of 56,500 kilograms for operation into or out of the City, provided that the Perimeter Highway and the Truck Route system was used as part of the shortest routing to/from the trip origin or destination. Since 1988, RTAC vehicles were allowed to operate on City streets via permit under certain conditions. Such a system of permitting, which is allowed by provisions of the Highway Traffic Act, enabled evaluation of the impact of such trucks not only on traffic operations on City streets, but on any damage to the roadway attributable to use of the street by such vehicles. Following an extensive evaluation period and public debate, it was determined that RTAC vehicles could reasonably be operated on City streets without any deleterious effects. Given that the system of issuing permits to the multitude of operators of RTAC vehicles was onerous, arduous and consuming of scarce City resources and cumbersome for truck operators, such a practice was reviewed by the City in consultation with Compliance Services of the Manitoba Department of Highways and Transportation and the Manitoba Trucking Association.

In conjunction with such a review, a survey in 1999 showed that most jurisdictions in Western Canada, except Winnipeg and Vancouver (who were limiting the overall length of trucks but were then reviewing this regulation), allowed RTAC trucks to operate into, out of, and within City limits without requiring a permit. Most jurisdictions did not distinguish between RTAC and non-RTAC trucks and only over-dimensioned or over-weight vehicles were required to obtain a permit

Accordingly, in 2000, the Traffic By-law was amended to allow RTAC vehicles of up to 62,500 kilograms gross vehicle weight in the case of single chassis trucks in combination with a full trailer and RTAC "B" Train combination truck-tractor semi-trailer vehicles to operate into, out of, and within the City. Such a by-law amendment

circumvented the need to issue the multitude of permits, and resulted in significant saving in clerical time for the City which was able to be directed to other areas of demonstrated need. Such an amendment ensured that competitive commerce in a large urban centre such as Winnipeg is not compromised with unnecessary “red tape”.

In summary, in accordance with provisions contained in the Traffic By-law, RTAC vehicles with a gross vehicle weight ranging from 16,400 kilograms in the case of a 2 axle single chassis truck to 62,500 kilograms in the case of a single chassis truck in combination with a full trailer and an RTAC “B” Train combination truck-tractor semi-trailer vehicle, are permitted to operate on City streets, subject to the specified vehicle configuration and axle loading, and subject to use of streets that are designated as Truck Routes. In accordance with provisions of the Traffic By-law, trucks may operate on streets that are not designated as a Truck Route, provided that the shortest routing is taken to/from a Truck Route where the origin or destination of the trip is not on a Truck Route.

It should be noted that the City of Winnipeg does not have any specifically identified RTAC Routes. Rather, RTAC trucks may operate on all streets in the City of Winnipeg, subject to use of designated Truck Routes and the shortest routing to/from a Truck Route and a point of origin/destination as described above, and subject to any posted weight restrictions on bridges and overpasses.

iii) Origin-Destination Study Results of Trucks on Saskatchewan Avenue -

Saskatchewan Avenue is a Regional Street, a Full Time Truck Route, and a Snow Route. Saskatchewan Avenue between Provincial Trunk Highway No. 101 and Sturgeon Road is backed by residential property on the south side and fronted by the CPR Glenboro Subdivision on the north side. There is no residential development on Saskatchewan Avenue east of Sturgeon Road. (Appendix B contains aerial site plans for reference.)

Saskatchewan Avenue between Provincial Trunk Highway No. 101 and Sturgeon Road contains a two lane composite pavement roadway, and in a typical 12 hour weekday between 07:00 and 19:00 carries approximately 4,800 vehicles.

Based on a 12 hour study between 07:00 and 19:00 undertaken on June 14 and 20, 2006 on Saskatchewan Avenue at a point just east of Provincial Trunk Highway No. 101, of the 4,800 vehicles on Saskatchewan Avenue, 193 (4%) were trucks, being vehicles with 6 or more tires. Of the 193 trucks:

- 65 (34%) were trucks of the smaller category having no more than 6 tires; and
- 128 (66%) were trucks with more than 6 tires.

- *193 (100%) total trucks.*

On Saskatchewan Avenue at a point just west of Sturgeon Road, 245 trucks were recorded during the same 12 hour period. Of the 245 trucks:

- 101 (41%) were trucks of the smaller category having no more than 6 tires; and
- 144 (59%) were trucks with more than 6 tires.

- *245 (100%) total trucks.*

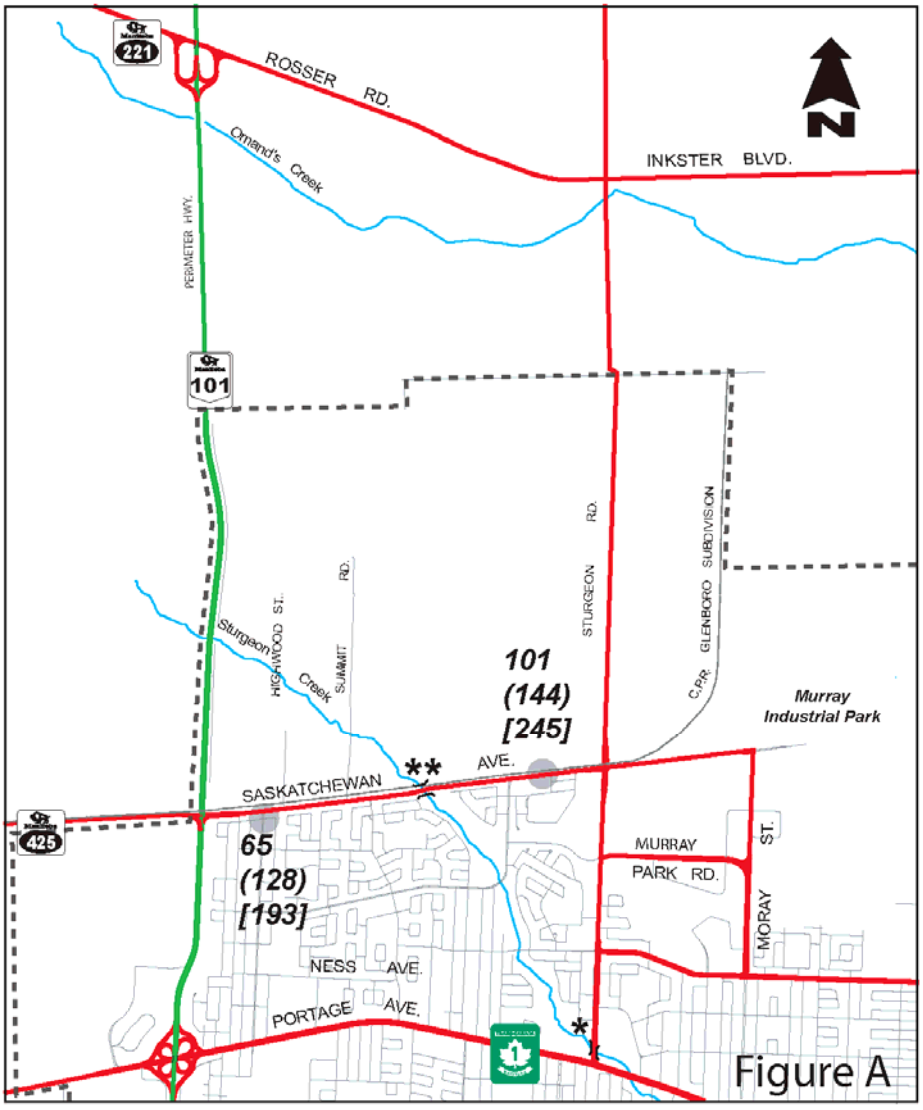

23	TRUCKS WITH 6 TIRES
(20)	TRUCKS WITH MORE THAN 6 TIRES
[52]	TOTAL TRUCK TRAFFIC
*	BRIDGE RESTRICTED TO 36,500 kg
**	BRIDGE RATED FOR 62,500 kg
●	POINT OF ENTRY
- - - -	CITY LIMIT

Winnipeg
Embrace the Spirit • Vivez l'esprit

TOTAL TRUCK TRAFFIC
(12 HOUR PERIOD BETWEEN 07:00 AND 19:00)
ON SASKATCHEWAN AVENUE
(BETWEEN P.T.H. 101 and STURGEON RD.)

By way of comparison, other Truck Routes in the City carry up to 50,000 vehicles in a typical 12 hour weekday, upon which the percentage of trucks ranges between 2% and 18%.

It has been suggested that Saskatchewan Avenue between Sturgeon Road and Provincial Trunk Highway No. 101 is being used by trucks as an alternative to Rosser Road (being the westerly extension of Inkster Boulevard) as a means of accessing Provincial Trunk Highway No. 101.

As stated above, the results of a 12 hour origin-destination study undertaken between 07:00 and 19:00 on June 14 and 20, 2006 on Saskatchewan Avenue showed that 193 trucks use Saskatchewan Avenue at a point just east of Provincial Trunk Highway No. 101, and 245 trucks at a point just west of Sturgeon Road.

Of the 193 trucks on Saskatchewan Avenue east of Provincial Trunk Highway No. 101, 127 passed through on Saskatchewan Avenue between Provincial Trunk Highway No. 101 and Sturgeon Road - 64 westbound and 63 eastbound.

Of the 245 trucks on Saskatchewan Avenue west of Sturgeon Road, 115 passed through on Saskatchewan Avenue between Sturgeon Road and Provincial Trunk Highway No. 101 - 52 westbound and 63 eastbound.

A detailed analysis of the origin-destination study is provided in Appendix D. The origin-destination study conducted suggests that there is a demonstrated demand for use of Saskatchewan Avenue between Provincial Trunk Highway No. 101 and Sturgeon Road by trucks oriented to/from Murray Industrial Park and to/from locations on Sturgeon Road and streets intersecting Sturgeon Road south of Saskatchewan Avenue.

Results from the origin-destination study indicate that of the 193 total trucks recorded in 12 hours on Saskatchewan Avenue at a point just east of Provincial Trunk Highway No. 101, 28 (15%) could potentially have used Rosser Road as a means of travelling between the intersection of Inkster Boulevard and Sturgeon Road and the intersection of Saskatchewan Avenue and Provincial Trunk Highway No. 101. A reduction of 28 trucks on Saskatchewan Avenue in a typical 12 hour weekday is equivalent to a decrease of 2 trucks per hour, on average (from 16 trucks per hour to 14 trucks per hour, on average). Rerouting of these vehicles would not be anticipated to have a significant or perceptible impact on the volume of trucks on Saskatchewan Avenue. With regard to the larger trucks with more than 6 tires, such a reduction would equate to a decrease from 10 large trucks per hour to 9 large trucks per hour.

In summary, results from the origin-destination study indicate that Saskatchewan Avenue between P.T.H. 101 and Sturgeon Road:

- Is a point of origin/destination for trucks;
- Is not being used extensively as an alternate route to Rosser Road;

- Is being used by trucks originating/destined to points along Sturgeon Road south of Saskatchewan Avenue that may be displaced by the 36,500 kg gross vehicle weight restriction on the Sturgeon Creek crossing of Sturgeon Road.

iv) Implications of designating Saskatchewan Avenue between Provincial Trunk Highway No. 101 and Sturgeon Road a Part-Time Truck Route:

Truck Routes are an important component of our street system providing fundamental transportation links which add to the City's productivity, economic well being, and quality of life. It is important that trucks be provided with a meaningful system of through routes to ensure cost-effective delivery of goods and services, and to promote a vibrant and competitive environment for the City. Regional Streets such as Saskatchewan Avenue which comprise 20% of the linear length of the City's street system but experience 80% of the traffic volume, do receive special consideration for their initial design and construction and in their maintenance in perpetuity.

In designating Regional Streets, it is desirable to limit the separation between Truck Routes to no more than 1.6 kilometres in order to minimize intrusion of trucks onto the more concentrated residentially developed segments of the City. (Trucks are limited to using the shortest route between their point of destination/origin and a designated Truck Route.) Saskatchewan Avenue is an important east-west transportation link in the east-west Truck Route system in the north-west sector of the City within which only three Truck Routes exist north of the Assiniboine River, namely:

- Portage Avenue;
- Saskatchewan Avenue, which is approximately two kilometres north of Portage Avenue; and
- Inkster Boulevard/Rosser Road, which is approximately five kilometres north of Saskatchewan Avenue.

In addition to serving trucks oriented to the Highwood Street snow disposal site, Saskatchewan Avenue also serves as an important east-west through route to the West Perimeter Highway for trucks oriented to the business enterprises in the Murray Industrial Park east of Sturgeon Road as well as business enterprises on Sturgeon Road. Its function as a Full-Time Truck Route is of particular importance, given that the gross vehicle weight on the Sturgeon Road Crossing of Sturgeon Creek, being an alternate route for trucks displaced from Saskatchewan Avenue if it were to be rescinded as a Full-Time Truck Route, is limited to 36,500 kilograms, which is considerably (42%) less than the 62,500 kilograms that is otherwise allowed on City streets. Trucks with a gross vehicle weight greater than 36,500 kilograms displaced by a Part-Time Truck Route designation on Saskatchewan Avenue between Provincial Trunk Highway No. 101 and Sturgeon Road would be required to travel a more circuitous route to the north via Sturgeon Road and Rosser Road to reach the Perimeter Highway.

Additionally, if Saskatchewan Avenue were to be designated as a Part-Time Truck Route, (between 07:00 and 19:00, Monday to Saturday), many of those trucks oriented to/from the Highwood Street Snow disposal site would be required to orient to/from the West Perimeter Highway, being the shortest routing to the nearest available Truck Route in the 19:00 to 07:00, Monday to Saturday and all day Sunday period. Such a re-routing during these time periods would be considerably more circuitous and would result in an increase in the cost of the service provided. Any cost increase would ultimately be assigned to the consumer in the form of a higher price for goods and services and to the tax payer and commercial parking lot operators in the form of higher bid price for snow hauling. It would also likely result in an increase in the volume of truck traffic to ensure expedient snow removal or otherwise result in an increase in the time within which the snow removal is completed, either of which is equivalent to a reduced level of service for snow removal operations.

There are residences backing onto Saskatchewan Avenue between the West Perimeter Highway and Highwood Street which may be adversely affected by the increase in the volume of truck traffic on this section of Saskatchewan Avenue if Saskatchewan Avenue were designated as a Part-Time Truck Route. In the case of trucks removing snow from the residential and commercial sectors south of Saskatchewan Avenue, in the 19:00 to 07:00, Monday to Saturday and all day Sunday period, in many instances the shortest routing to the Highwood Street Snow disposal site may be via the north-south residential street system within the community, including on residential streets such as Hamilton Avenue, Cavalier Drive and Buchanan Boulevard, all of which have residential frontage. This would transfer the perceived problem for flanking property owners on Saskatchewan Avenue, to fronting property owners on the intersecting north-south residential streets south of Saskatchewan Avenue.

v) Perspectives of the Manitoba Trucking Association -

The Manitoba Trucking Association is opposed to changing Saskatchewan Avenue from a Full-Time Truck Route to a Part-Time Truck Route, citing the inefficiencies and increased costs associated with such an action. A presentation by the Manitoba Trucking Association at the July 11, 2006 meeting of the Standing Policy Committee on Infrastructure Renewal and Public Works is attached in Appendix E.

vi) Conclusion -

In summary, the following are important considerations with respect to the Truck Route designation of Saskatchewan Avenue between P.T.H. No. 101 and Sturgeon Road:

- That in addition to serving trucks oriented to the Highwood Street Snow disposal site, Saskatchewan Avenue also serves as an important east-west through route to the West Perimeter Highway for trucks oriented to the

business enterprises in the Murray Industrial Park east of Sturgeon Road as well as business enterprises on Sturgeon Road. Its function as a Full-Time Truck Route is of particular importance, given that the gross vehicle weight on the Sturgeon Road Crossing of Sturgeon Creek, being an alternate route for trucks displaced from Saskatchewan Avenue if it were to be rescinded as a Full-Time Truck Route, is limited to 36,500 kilograms, which is considerably (42%) less than the 62,500 kilograms that is otherwise allowed on City streets. Trucks with a gross vehicle weight greater than 36,500 kilograms displaced by a Part-Time Truck Route designation on Saskatchewan Avenue between Provincial Trunk Highway No. 101 and Sturgeon Road would be required to travel a more circuitous route to the north via Sturgeon Road and Rosser Road to reach the Perimeter Highway.

- If Saskatchewan Avenue were to be designated as a Part-Time Truck Route, (between 07:00 and 19:00, Monday to Saturday), many of those trucks oriented to/from the Highwood Street Snow disposal site would be required to orient to/from the West Perimeter Highway, being the shortest routing to the nearest available Truck Route in the 19:00 to 07:00, Monday to Saturday and all day Sunday period. Such a re-routing during such time periods would be considerably more circuitous and would result in an increase in the cost of the service provided. Any cost increase would ultimately be assigned to the consumer in the form of a higher price for goods and services and to the tax payer and commercial parking lot operators in the form of higher bid price for snow hauling. It would also likely result in an increase in the volume of truck traffic to ensure expedient snow removal or otherwise result in an increase in the time within which the snow removal is completed, either of which is equivalent to a reduced level of service for snow removal operations.

- There are residences backing onto Saskatchewan Avenue between the West Perimeter Highway and Highwood Street which may be adversely affected by the increase in the volume of truck traffic on this section of Saskatchewan Avenue if Saskatchewan Avenue were designated as a Part-Time Truck Route. In the case of trucks removing snow from the residential and commercial sectors south of Saskatchewan Avenue, in the 19:00 to 07:00, Monday to Saturday and all day Sunday period, in many instances the shortest routing to the Highwood Street Snow disposal site may be via the north-south residential street system within the community, including on residential streets such as Hamilton Avenue, Cavalier Drive and Buchanan Boulevard, all of which have residential frontage. This would transfer the perceived problem for backing property owners on Saskatchewan Avenue, to fronting property owners on the intersecting north-south residential streets south of Saskatchewan Avenue.

- The Manitoba Trucking Association is opposed to changing Saskatchewan Avenue from a Full-Time Truck Route to a Part-Time Truck Route, citing the inefficiencies and increased costs associated with such an action.

- The relatively low number of trucks that use Saskatchewan Avenue rather than Rosser Road to/from Provincial Trunk Highway No. 101.

For these reasons, it is recommended that Saskatchewan Avenue between Provincial Trunk Highway No. 101 and Sturgeon Road not be changed from a Full-Time Truck Route to a Part-Time Truck Route.

C) Street Repair Schedule:

A 2005 street condition rating program undertaken on Saskatchewan Avenue has ranked Saskatchewan Avenue between Provincial Trunk Highway No. 101 and Sturgeon Road to be in poor condition. In 2006 maintenance work was undertaken and funded from the Street Maintenance Division's current budget on the section of Saskatchewan Avenue from Hamilton Avenue to the back lane of Acheson Drive. This section is directly behind the houses from 79 Acheson Drive to 175 Acheson Drive. The maintenance work involved the removal of the existing asphaltic concrete overlay, stabilization of the pavement areas around low points, installation of partial subsurface drainage, repairs/renewal of failed portland cement concrete joints and finally the placement of a new asphaltic concrete pavement of between 80 to 100 mm thickness. The asphaltic concrete removed from the project was stock piled at the Highwood snow disposal site. While this may have caused some concerns about the City's intentions with regards to this site, there are no plans at this time to utilize these chippings to improve the snow disposal site/roadway itself. It is simply a matter of economics (reduced hauling costs) and trying to maximize the work that can be done on the roadway within the available limited funding. If the final decision of Council should be to close the snow disposal site on either a temporary or permanent basis, the City would remove the chippings for use elsewhere as part of any cleanup effort. Saskatchewan Avenue was closed to traffic during the project. This maintenance program was a short term response with an expected life of 5 to 7 years. Saskatchewan Avenue will be considered as a candidate project in the City of Winnipeg Capital Street Renewal Program, as a long term strategic response. Presently, a major rehabilitation of Saskatchewan Avenue between the Sturgeon Creek bridge and Provincial Trunk Highway No. 101 is in the five year capital forecast. It is noted the section between Sturgeon Road and the Sturgeon Creek bridge is not presently in the five year capital forecast.

D) Snow Disposal Site Relocation:

The snow disposal site located on Highwood Street was originally established by the old City of St. James and has been in use since before the formation of the amalgamated City of Winnipeg in the early 70's. It has remained in use since that time. The capacity of the site is estimated to be 225,000 cubic metres and it has been classified as a public site, meaning that the private sector can utilize it as a dump site for the snow removed from parking lots and other private areas. Approximately 85% of the snow hauled to this site each year is from the private sector.

Over the years, the City has made a significant public investment in the Highwood Street snow disposal site. In addition, the closing of this snow disposal site for this winter would result in increased hauling costs associated with transporting snow to alternate sites. City snow removal costs could increase an estimated $25,000 and the additional private sector costs considerably more. In discussion with the private sector, they have indicated that it would be unfair of the City to close this site on short notice as the contractors have already established many agreements/contracts with their customers for this upcoming winter.

The City's draft Road Salt Management Plan identifies a need to develop and implement a long term strategy to ensure that snow removal and disposal operations are done efficiently and in an environmentally responsible manner within the City of Winnipeg. Permanent snow sites need to be established that are engineered in conformance with Environment Canada's Code of Practice for Road Salt Management. A suitable number of such sites need to be identified and developed. All of the existing sites, including the Highwood Street snow disposal site, would be reviewed as part of the study to determine their suitability as one of the future permanent sites. This would include consideration of any impacts that the operation of a snow disposal site may have on adjacent neighbourhoods.

Financial Impact Statement Date: August 23, 2006

Project Name:

The Standing Policy Committee on Infrastructure Renewal and Public Works

COMMENTS:

There is no financial impact as a result of the report recommendations at this time. The financial impact associated with future street renewal cost of Sasketchewan Avenue and relocation of the Highwood Street snow disposal site will be reflected at the time decisions are made on these two issues.

original signed by: Darcy Stewart

IN PREPARING THIS REPORT THERE WAS:

Internal Consultation With and Concurrence By: N/A

External Consultation With:

- Manitoba Trucking Association.

THIS REPORT SUBMITTED BY:

Department: Public Works
Division: Transportation
Prepared by:
Carl Sitarz, Traffic Analyst…….. .. 986-5067
Diana Emerson, P. Eng., MCIP, Traffic Management Engineer…..986-5900
Processed by: Carol Kawaza, Transportation Clerk ……... 986-5288

File No. A-01, A-13

APPENDIX A

HIGHWAY TRAFFIC BOARD LETTER

Manitoba

Transportation and
Government Services

Transports et
Services gouvernementaux

Highway Traffic Board
Conseil routier

(204) 945-8912
(204) 783-6529 Fax / Téléc

200-301 Weston Street
Winnipeg MB R3E 3H4
CANADA

301, rue Weston, pièce 200
Winnipeg (MB) R3E 3H4
CANADA

June 16, 2006

Our File 30000-S

CERTIFIED MAIL

Ms. Diana Emerson, P.Eng.
Traffic Management Engineer
Public Works Department
City of Winnipeg
100 Main Street
Winnipeg MB R3C 1A4

Dear Ms. Emerson:

RE: THE HIGHWAY TRAFFIC BOARD HEARING
JUNE 13, 2006 - WINNIPEG

Your request to reduce the speed zone from 70 km/h to 60 km/h on a portion of Saskatchewan Avenue between Sturgeon Road and Cavalier Drive within the City of Winnipeg was considered by the Board on the above noted date.

The Highway Traffic Board, having considered your request, oral presentation by the City of Winnipeg as well as residents' of the area, and a speed study report, ruled that the request be denied.

The speed study report revealed that Saskatchewan Avenue is a regional street, a full-time truck route, a bus route and a snow route. The report stated that on the north side of the roadway is the CPR Glenboro Subdivision and on the south side is backed by residential development. It was stated that this highway carries approximately 7,500 vehicles per day and that parking is prohibited on both sides. The Board's practice, relating to setting speed limits, is that the 85th percentile accurately depicts the behaviour of the motorists using a particular highway. As stated in the speed study report, based on information collected on February 15, 2006, the 85th percentile of this portion of Saskatchewan Avenue is, on average, 75 km/h. Therefore, the Highway Traffic Board is of the opinion that a speed reduction is not warranted at this time.

... /2

The Board would like to also point out that it is their belief that the concerns of the residents, being vibration, noise and road maintenance of Saskatchewan Avenue, is not a speed issue, rather an infrastructure issue. Also, it is the Board's understanding that the City of Winnipeg is looking into the possibility of changing Saskatchewan Avenue to a part-time truck route. The Board feels that addressing these issues will aid in the improvement of the residents' concerns.

If you have any questions, or require further information, please do not hesitate to contact our office.

Yours truly,

Michelle F. Slotin,
Assistant Secretary
THE HIGHWAY TRAFFIC BOARD

/mfs

PUBLIC WORKS DEPARTMENT
MAIL
JUN 21 2006
RECEIVED

APPENDIX B

SITE PLANS

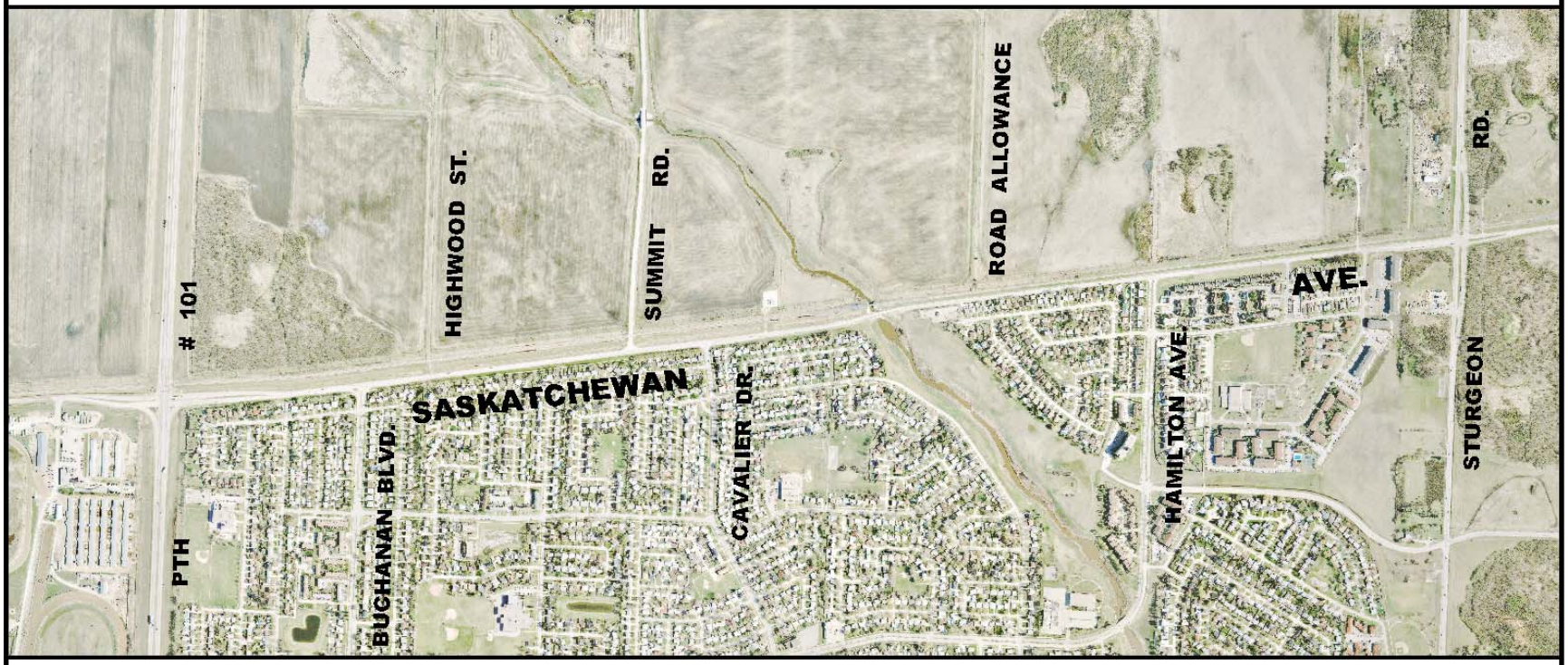

SASKATCHEWAN AVE.
BETWEEN PTH # 101 AND STURGEON RD.

DRAWN BY: J.G. DATE: 06.07.24 SCALE: N.T.S.

F06-42A



SASKATCHEWAN AVE.
BETWEEN STURGEON RD. AND WIHURI RD.

DRAWN BY: J.G. DATE: 06.07.18 SCALE: N.T.S.

F06-52

APPENDIX C

ILLUSTRATIONS OF RTAC and NON-RTAC VEHICLES

RTAC STRAIGHT TRUCK

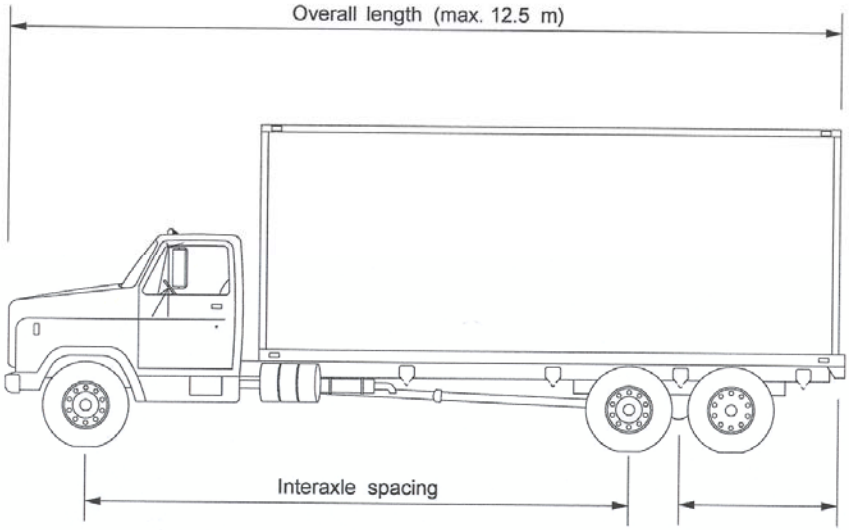

Max. GVW 24,300 kg (16,400 kg for 2 axles)

RTAC TRUCK & PONY TRAILER

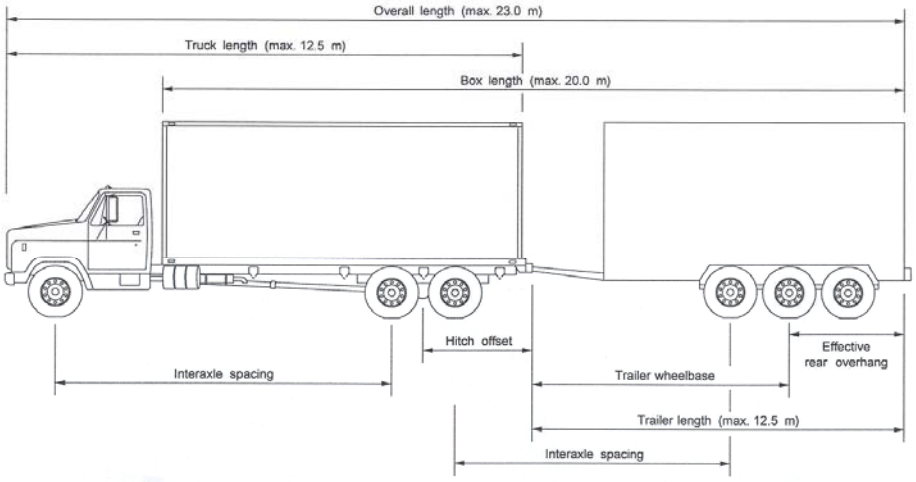

Max. GVW 45,300 kg (25,000 kg for 3 axles, 33,400 kg for 4 axles, and 41,300 for 5 axles)

RTAC TRUCK & FULL TRAILER

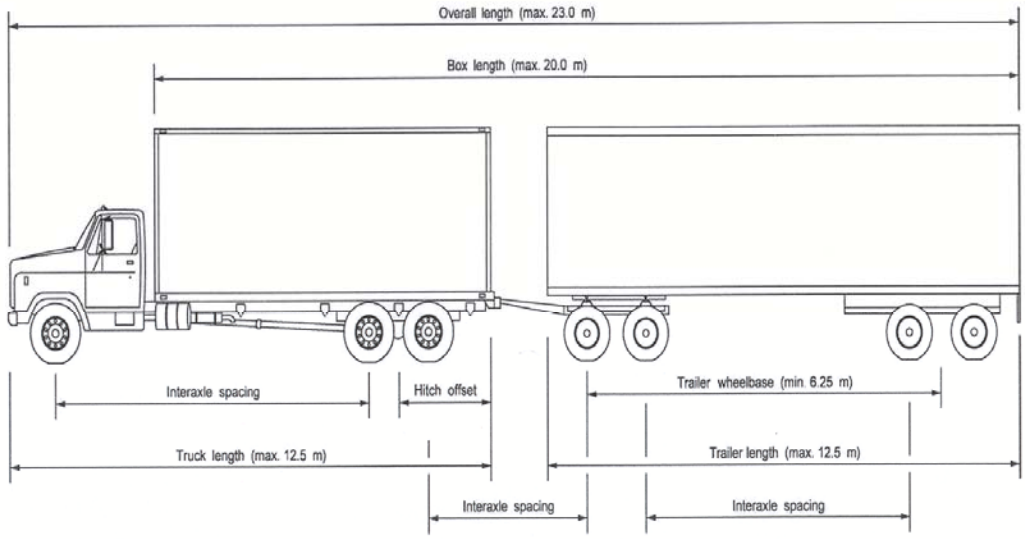

Max. GVW 55,300 kg (33,400 kg for 4 axles, 41, 300 kg for 5 axles, 48,300 kg for 6 axles, and 62,500 kg for 8 axles)

RTAC TRACTOR SEMI TRAILER

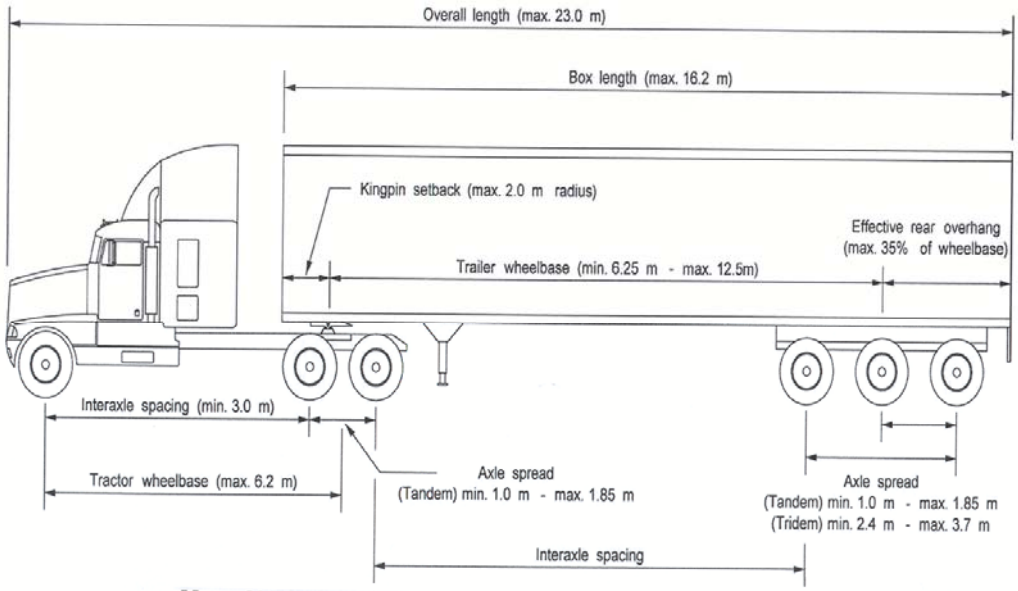

Max. GVW 46,500 kg (23,700 kg for 3 axles, 31,600 kg for 4 axles, and 39,500 kg for 5 axles)

RTAC A TRAIN DOUBLE

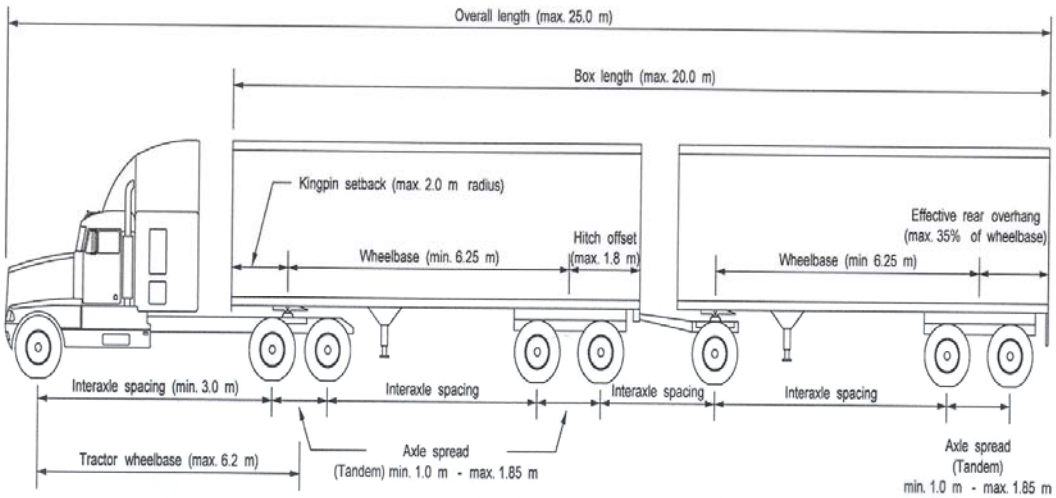

Max. GVW 53,500 kg (39,700 kg for 5 axles, 47,600 kg for 6 axles, and 53,300 kg for 7,9 or 10 axles)

RTAC B TRAIN DOUBLE

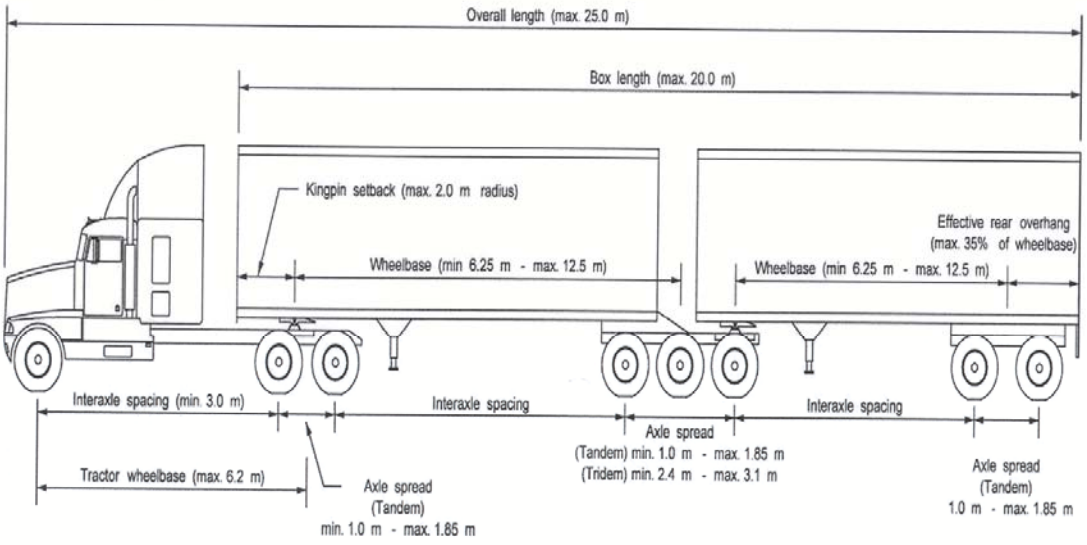

Max. GVW 62,500 kg (56,500 kg for 7 axles)

RTAC C TRAIN DOUBLE

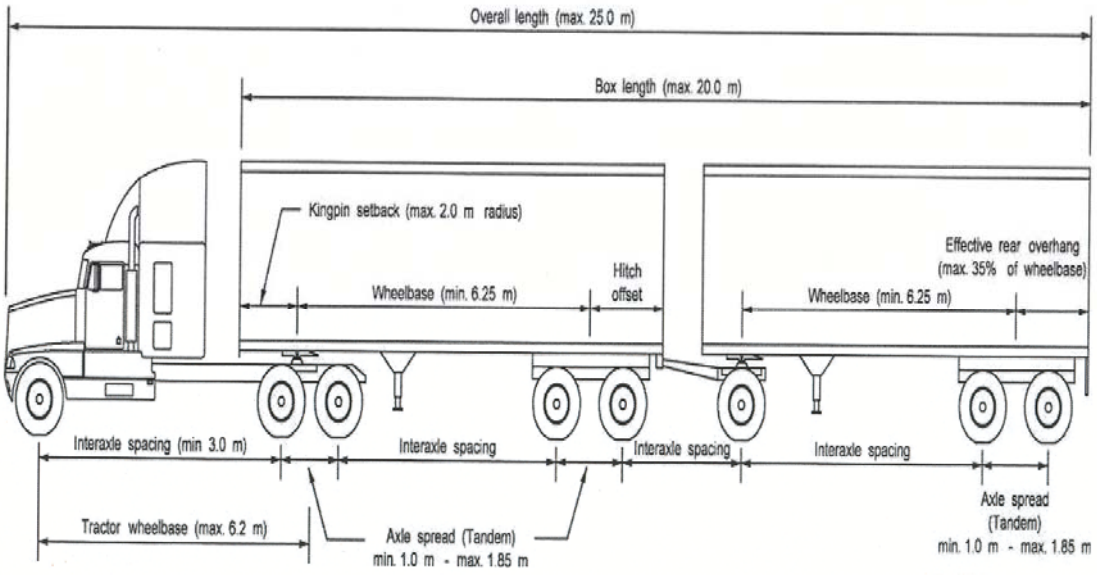

Max. GVW 53,500 kg (49,800 for 6 axles, and 53,500 kg for 7,9 or 10 axles)

NON-RTAC STRAIGHT TRUCK

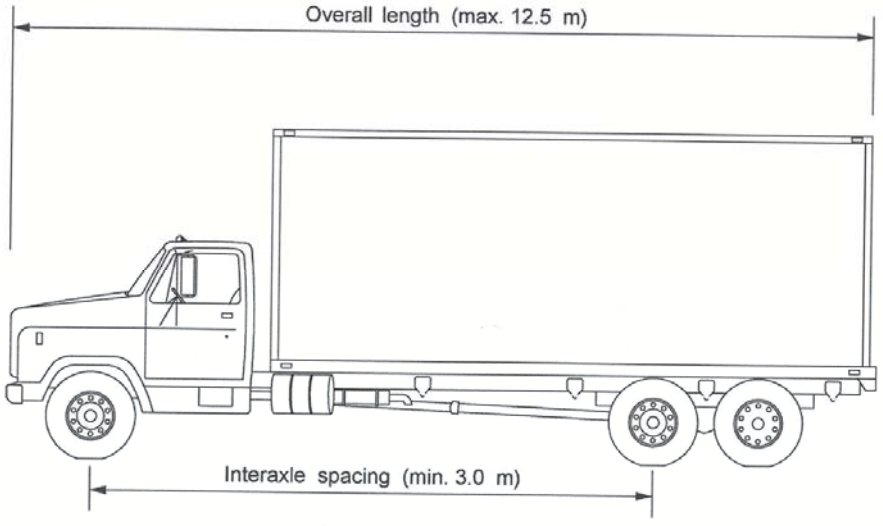

Max. GVW 23,300 kg (16,400 kg for 2 axles)

NON-RTAC TRUCK & PONY TRAILER

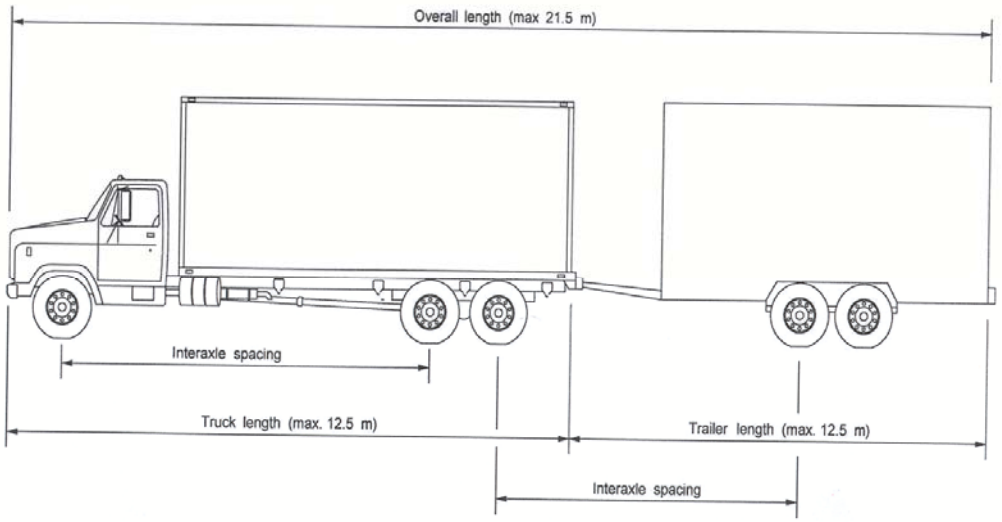

Max. GVW 39,300 kg (25,500 kg for 3 axles, and 32,400 kg for 4 axles)

NON-RTAC TRUCK & FULL TRAILER

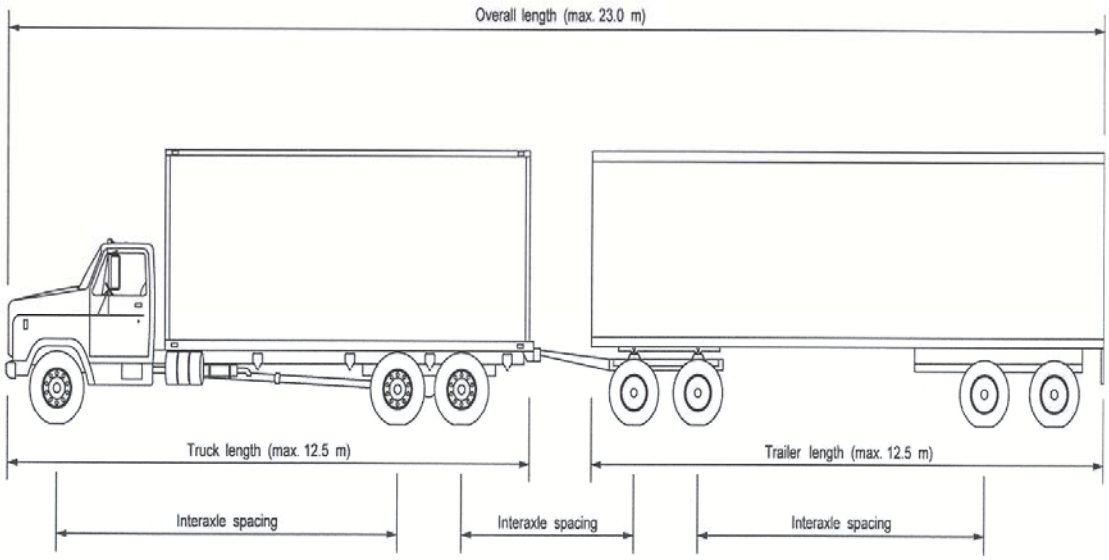

Max. GVW 55,300 kg (34,600 kg for 4 axles, 41,500 kg for 5 axles, 48,400 kg for 6 axles, and 55,300 kg for 8 axles)

NON-RTAC TRACTOR SEMI TRAILER

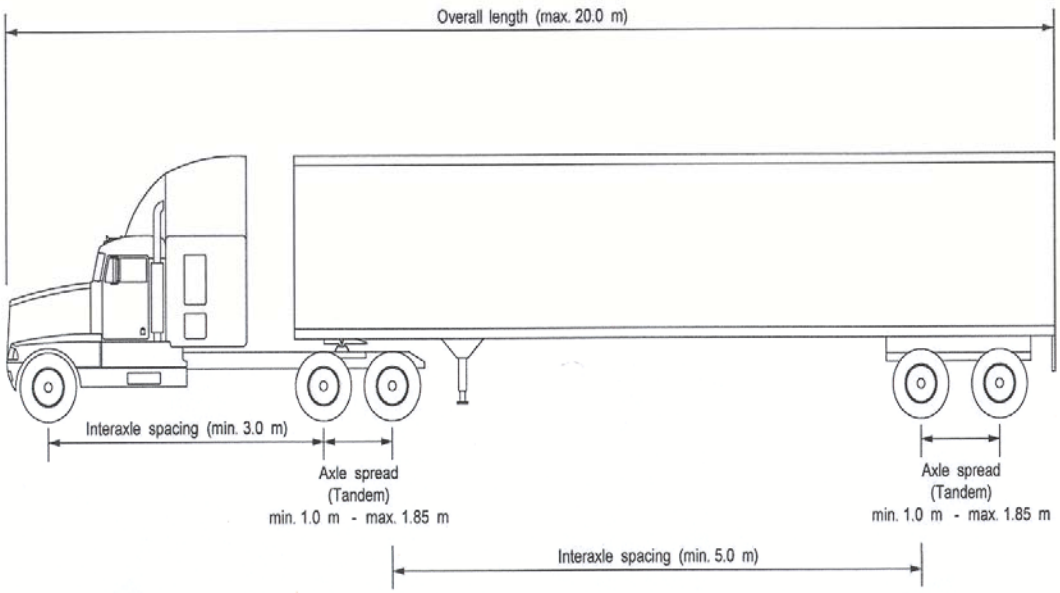

Max. GVW 37,500 kg (23,700 kg for 3 axles, 30,600 kg for 4 axles, and 37,500 kg for 6 axles)

NON-RTAC A TRAIN DOUBLE

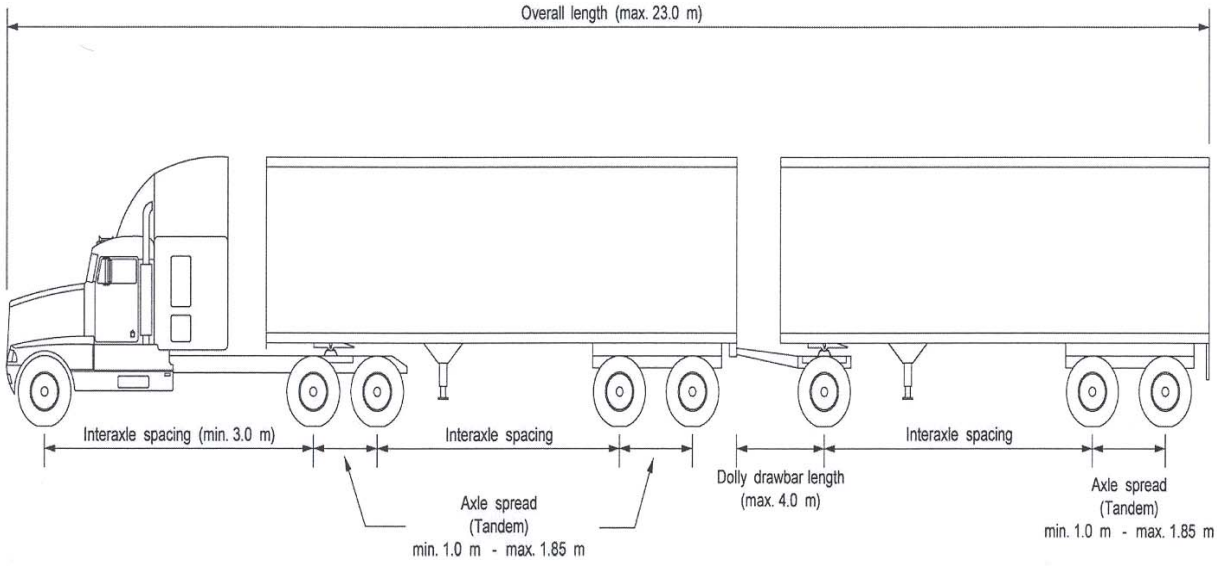

Max. GVW 53,500 kg (41,900 kg for 5 axles, 48,800 kg for 6 axles, 53,500 kg for 7 axles, and 53,500 kg for 9 or 10 axles)

NON-RTAC B TRAIN DOUBLE

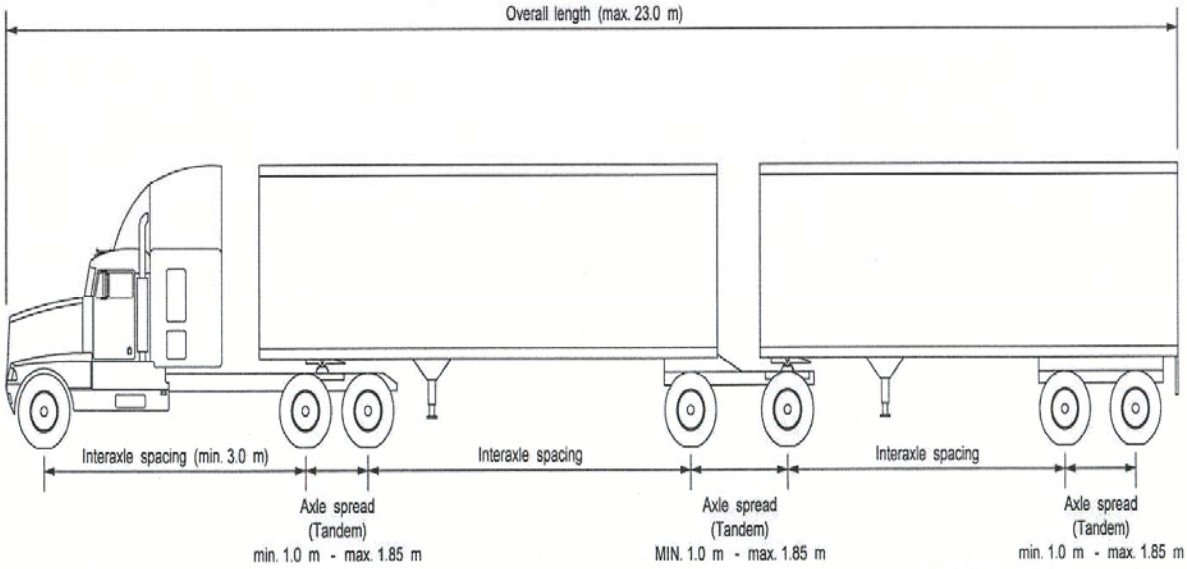

Max. GVW 53,500 kg (32,800 kg for 4 axles, 39,700 kg for 5 axles, 46,600 kg for 6 axles and 53,500 kg for 8 or 9 axles)

NON-RTAC C TRAIN DOUBLE

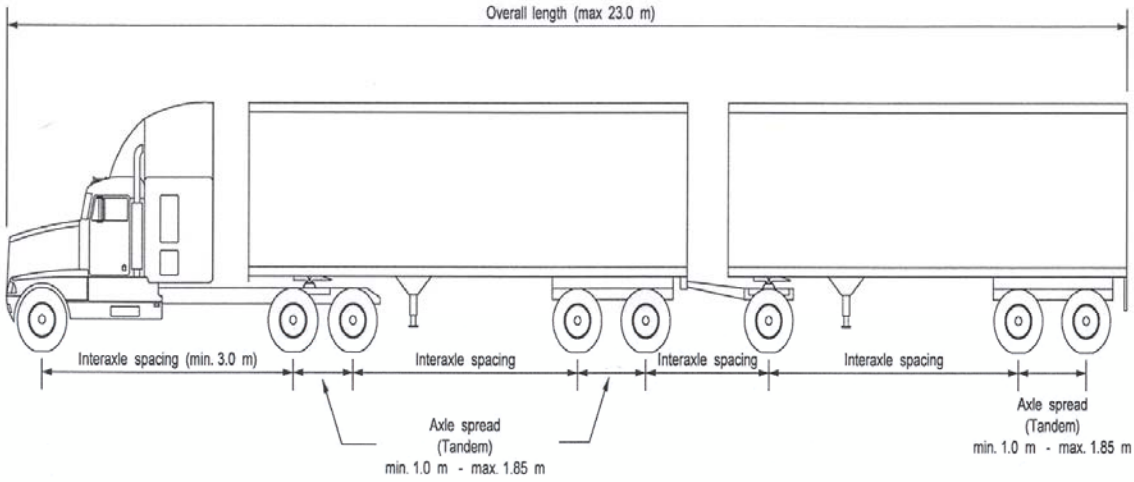

Max. GVW 53,500 kg (41,900 kg for 5 axles, 48,800 kg for 6 axles, and 53,500 kg for 7,9 or 10 axles)

APPENDIX D

ORIGIN – DESTINATION STUDY

(l) Origin-destination between the intersections of Inkster Boulevard and Sturgeon Road and Provincial Trunk Highway No. 101 and Saskatchewan Avenue.

(a) Westbound trucks on Saskatchewan Avenue originating at Inkster Boulevard and Sturgeon Road –

- of the 12 westbound trucks on Inkster Boulevard that turned left onto Sturgeon Road and subsequently turned right onto Saskatchewan Avenue (see Figure B): 8 were destined to locations on Saskatchewan Avenue between Sturgeon Road and Provincial Trunk Highway No. 101 or to streets intersecting Saskatchewan Avenue; and 4 exited at Provincial Trunk Highway No. 101, of which 2 proceeded northbound on Provincial Trunk Highway No. 101 and 2 proceeded southbound. That is, of the 12 westbound left turning trucks on Inkster Boulevard at Sturgeon Road, 4 exited at Saskatchewan Avenue and Provincial Trunk Highway No. 101.

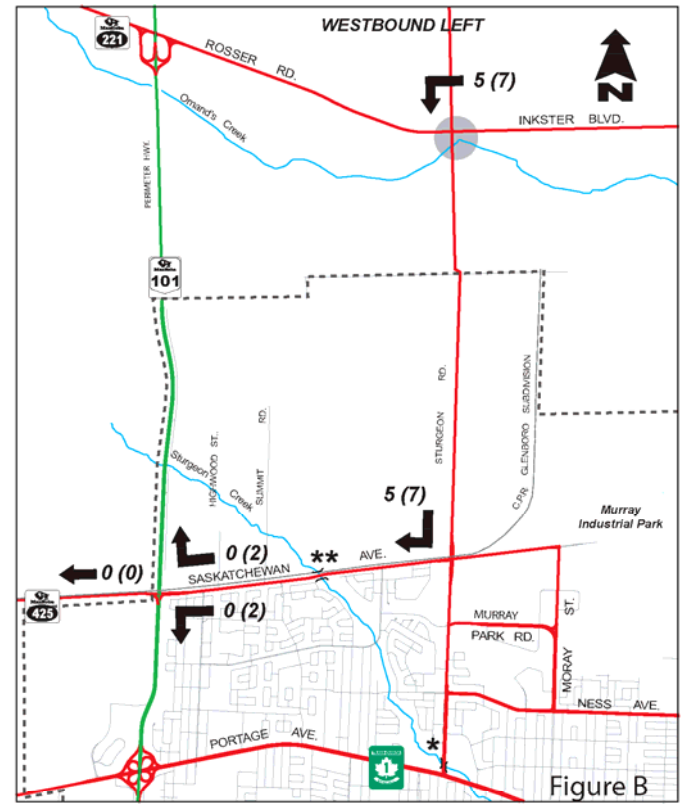

(b) Eastbound trucks on Saskatchewan Avenue originating at Provincial Trunk Highway No. 101 and Saskatchewan Avenue –

- of the 43 northbound trucks on Provincial Trunk Highway No. 101 that turned right onto Saskatchewan Avenue (see Figure C): none were destined to locations on Saskatchewan Avenue between Provincial Trunk Highway No. 101 and Sturgeon Road or to streets intersecting Saskatchewan Avenue; 11 turned left onto Sturgeon Road, of which 10 subsequently turned right onto Inkster Boulevard. That is, of the 43 northbound right turning trucks on Provincial Trunk Highway No. 101 at Saskatchewan Avenue, 10 exited as a northbound right turn movement on Sturgeon Road at Inkster Boulevard. Significantly, 13 turned right and 19 proceeded through at Saskatchewan Avenue and Sturgeon Road, of which 14 had more than six tires (possibly related to the 36,500 kg gross vehicle weight restriction on the Sturgeon Road crossing of Sturgeon Creek).

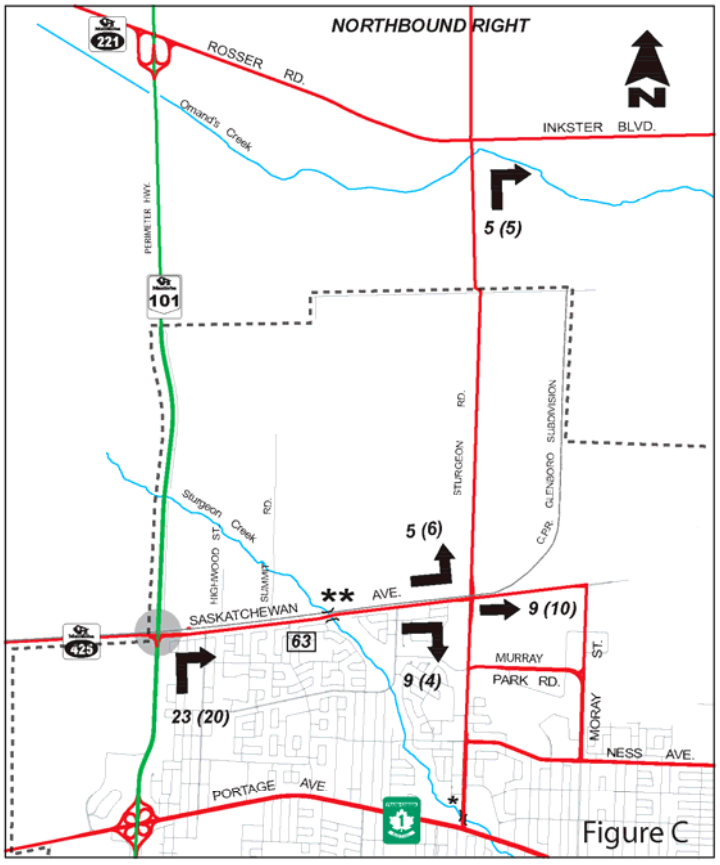

23 TRUCKS WITH 6 TIRES
(20) TRUCKS WITH MORE THAN 6 TIRES
* BRIDGE RESTRICTED TO 36,500 kg
** BRIDGE RATED FOR 62,500 kg
POINT OF ENTRY
63 TOTAL TRUCK TRAFFIC
CITY LIMIT

Winnipeg

EASTBOUND TRUCK TRAFFIC
(12 HOUR PERIOD BETWEEN 07:00 AND 19:00)
ON SASKATCHEWAN AVENUE
ORIGINATING AT P.T.H. #101 AND SASKATCHEWAN AVE.

F06-48c

(II) Origin-destination between the intersections of Sturgeon Road and Saskatchewan Avenue and Provincial Trunk Highway No. 101 and Saskatchewan Avenue.

(a) Westbound trucks on Saskatchewan Avenue originating at Sturgeon Road and Saskatchewan Avenue –

- of the 6 southbound trucks on Sturgeon Road that turned right onto Saskatchewan Avenue (see Figure D): none were destined to locations on Saskatchewan Avenue between Sturgeon Road and Provincial Trunk Highway No. 101 or to streets intersecting Saskatchewan Avenue; 4 were destined to Provincial Trunk Highway No. 101, 1 of which proceeded northbound and 3 proceeded southbound; and 2 proceeded westbound on Saskatchewan Avenue west of Provincial Trunk Highway No. 101.

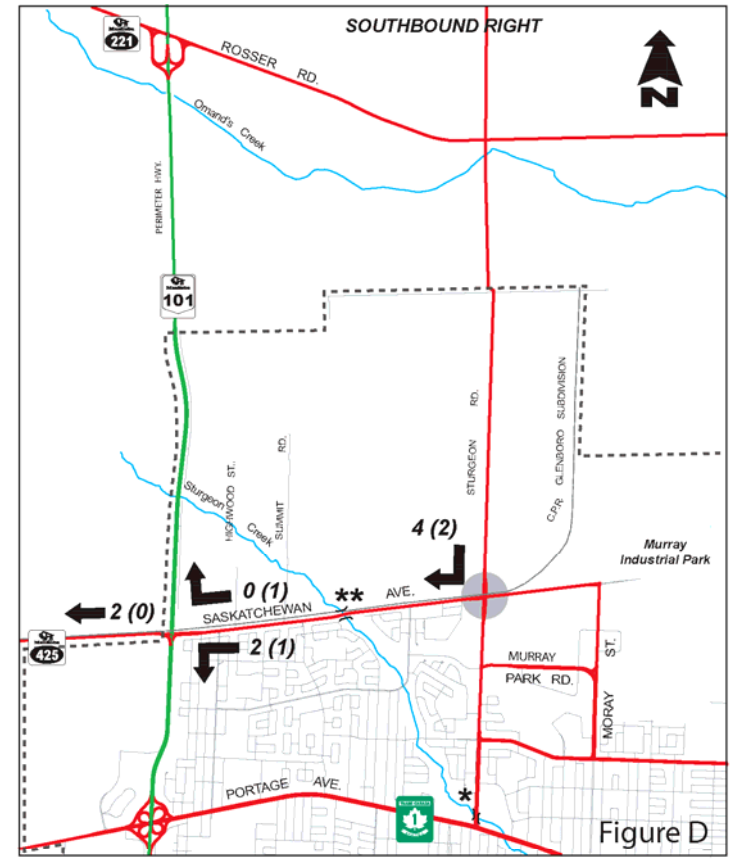

- of the 21 northbound trucks on Sturgeon Road that turned left onto Saskatchewan Avenue (see Figure E): all 21 exited at Provincial Trunk Highway No. 101, 5 of which proceeded northbound, 14 proceeded southbound, and 2 proceeded westbound. It is noted that the 11 trucks with more than 6 tires that proceeded southbound on P.T.H. 101 may possibly be related to the 36,500 gross vehicle weight restriction on the Sturgeon Road crossing of Sturgeon Creek.

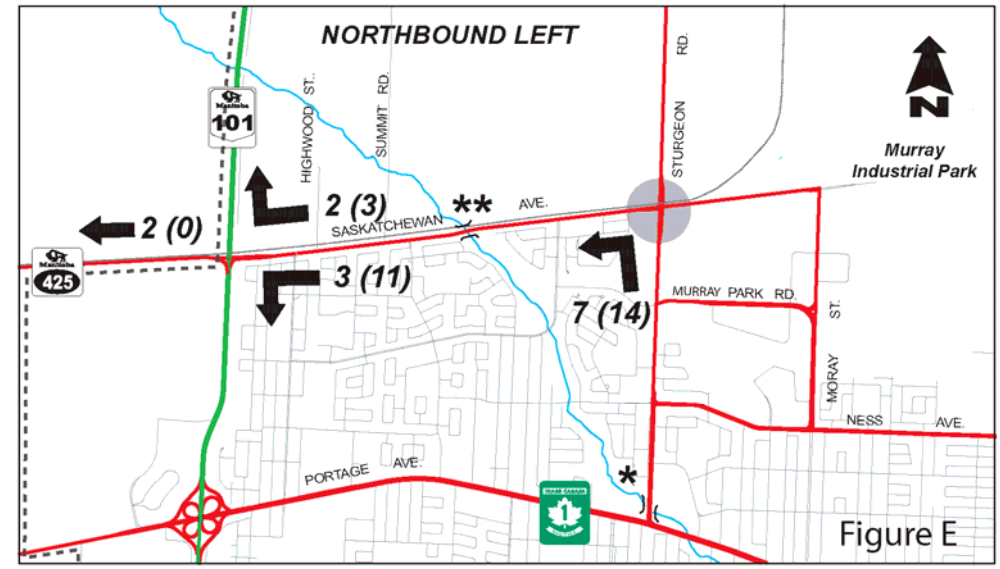

23 TRUCKS WITH 6 TIRES
(20) TRUCKS WITH MORE THAN 6 TIRES
* BRIDGE RESTRICTED TO 36,500 kg
** BRIDGE RATED FOR 62,500 kg
POINT OF ENTRY
CITY LIMIT

Winnipeg

WESTBOUND TRUCK TRAFFIC
(12 HOUR PERIOD BETWEEN 07:00 AND 19:00)
ON SASKATCHEWAN AVENUE
ORIGINATING AT STURGEON RD. AND SASKATCHEWAN AVE.

F06-48e

- of the 25 westbound trucks on Saskatchewan Avenue that proceeded through on Saskatchewan Avenue (see Figure F): all 25 exited at Provincial Trunk Highway No. 101, 2 of which proceeded northbound, 19 proceeded southbound and 4 proceeded westbound. It is noted that the 16 trucks with more than 6 tires that proceeded southbound on P.T.H. 101 may possibly be related to the 36,500 gross vehicle weight restriction on the Sturgeon Road crossing of Sturgeon Creek.

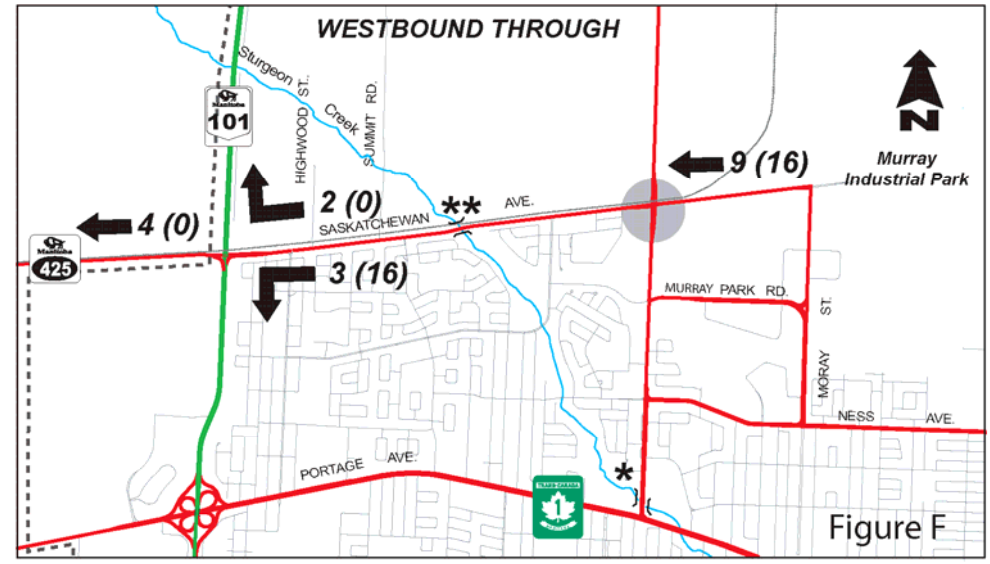

23 TRUCKS WITH 6 TIRES
(20) TRUCKS WITH MORE THAN 6 TIRES
* BRIDGE RESTRICTED TO 36,500 kg
** BRIDGE RATED FOR 62,500 kg
POINT OF ENTRY
CITY LIMIT

Winnipeg

WESTBOUND TRUCK TRAFFIC
(12 HOUR PERIOD BETWEEN 07:00 AND 19:00)
ON SASKATCHEWAN AVENUE
ORIGINATING AT STURGEON RD. AND SASKATCHEWAN AVE.

F06-48f

(b) Eastbound trucks on Saskatchewan Avenue originating at Provincial Trunk Highway No. 101 and Saskatchewan Avenue –

- of the 43 northbound trucks on Provincial Trunk Highway No. 101 that turned right onto Saskatchewan Avenue (see Figure C): none were destined to locations on Saskatchewan Avenue between Provincial Trunk Highway No. 101 and Sturgeon Road or to streets intersecting Saskatchewan Avenue; 11 turned left onto Sturgeon Road; 19 proceeded through on Saskatchewan Avenue at Sturgeon Road; and 13 turned right at Sturgeon Road.

- of the 14 southbound trucks on Provincial Trunk Highway No. 101 that turned left onto Saskatchewan Avenue (see Figure G): none were destined to locations on Saskatchewan Avenue between Provincial Trunk Highway No. 101 and Sturgeon Road or to streets intersecting Saskatchewan Avenue; 10 turned right onto Sturgeon Road; and 4 proceeded through on Saskatchewan Avenue at Sturgeon Road.

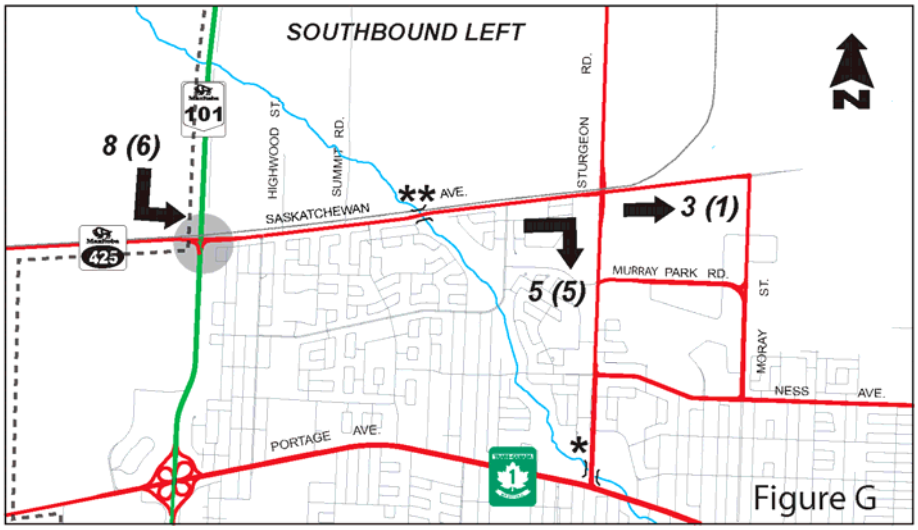

23 TRUCKS WITH 6 TIRES
(20) TRUCKS WITH MORE THAN 6 TIRES
* BRIDGE RESTRICTED TO 36,500 kg
** BRIDGE RATED FOR 62,500 kg
POINT OF ENTRY
63 TOTAL TRUCK TRAFFIC
CITY LIMIT

Winnipeg

EASTBOUND TRUCK TRAFFIC
(12 HOUR PERIOD BETWEEN 07:00 AND 19:00)
ON SASKATCHEWAN AVENUE
ORIGINATING AT P.T.H. #101 AND SASKATCHEWAN AVE.

F06-48g

- of the 6 eastbound through trucks on Saskatchewan Avenue at Provincial Trunk Highway No. 101 (see Figure H): none were destined to locations on Saskatchewan Avenue between Provincial Trunk Highway No. 101 and Sturgeon Road or to streets intersecting Saskatchewan Avenue; 2 turned right onto Sturgeon Road; and 4 proceeded through on Saskatchewan Avenue at Sturgeon Road.

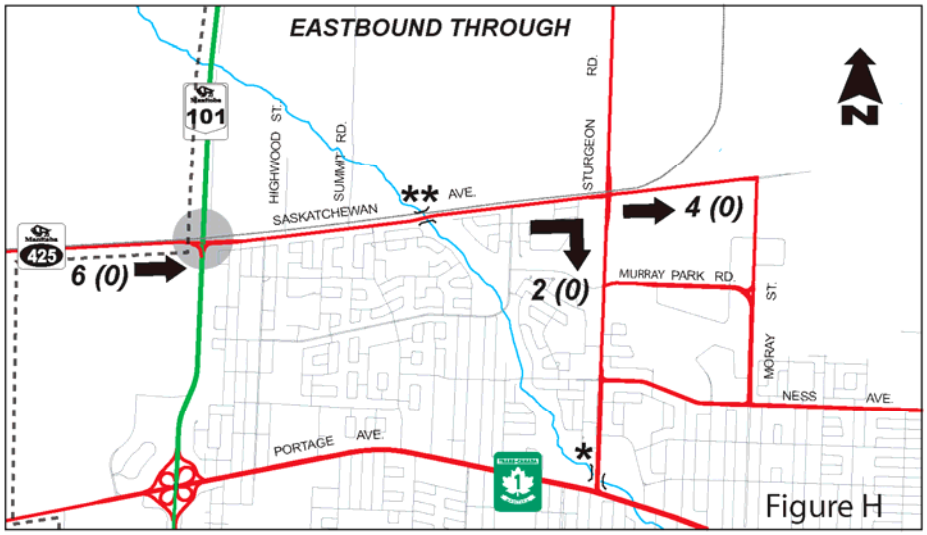

23 TRUCKS WITH 6 TIRES
(20) TRUCKS WITH MORE THAN 6 TIRES
* BRIDGE RESTRICTED TO 36,500 kg
** BRIDGE RATED FOR 62,500 kg
POINT OF ENTRY
63 TOTAL TRUCK TRAFFIC
CITY LIMIT

Winnipeg
Endless the Spirit • Vivez l'esprit

EASTBOUND TRUCK TRAFFIC
(12 HOUR PERIOD BETWEEN 07:00 AND 19:00)
ON SASKATCHEWAN AVENUE
ORIGINATING AT P.T.H. #101 AND SASKATCHEWAN AVE.

F06-48h

APPENDIX E

PRESENTATION FROM MANITOBA TRUCKING ASSOCIATION



Presentation to the Standing Policy Committee on Infrastructure Renewal and Public Works Regarding Saskatchewan Avenue

July 11, 2006

The Manitoba Trucking Association (MTA) is an industry association that represents the interests of the trucking industry in Manitoba. Membership comprises of carrier members, which includes P.S.V. (for hire) fleets, private fleets, household mover fleets, heavy haul fleets, couriers, local cartage companies, and an Associated Trades Division, which includes companies that provide services to carrier members.

Member companies range in size from one-truck operators to companies operating hundreds of trucks and employing thousands of employees. The trucking industry is an integral part of the Manitoba and City of Winnipeg economies.

The issue of Saskatchewan Avenue is one that has re-surfaced from time to time. Like many other streets in our city, Saskatchewan Avenue must address the needs of the commercial and residential interests of our citizens and businesses. This is never an easy task. However this scenario is not unlike numerous scenarios this committee and the City of Winnipeg have addressed over the last 10-20 years.

Traditionally, economic routes have existed in all quadrants of our city. Many, if not most of these economic routes, were developed based on the commercial / industrial needs within our city. When these were developed, traditionally residences were not adjacent to these routes. One of the purposes of these routes was and is to control the commercial / truck traffic within the City of Winnipeg.

To accomplish this, the City of Winnipeg Traffic By-law No. 1573/77 designates Full-Time and Part-Time Truck Routes in Winnipeg. The intent of the Truck Route System is to maintain truck travel (that is trucks with 6 or more tires) to the extent as is practical upon arterial streets, being those streets that are constructed to a high standard such as thicker and stronger pavement and wider roadways that are required to carry large trucks on a regular basis. In the planning of an urban area, it is desirable to provide a grid of arterial streets and Truck Routes that are separated by no more than 1.6 kilometres in order to:

- minimize the need to construct streets to a higher standard such a thicker pavement and wider roadways that are required to carry large trucks on a regular basis.
- ensure that there are a reasonable number of Truck Routes available for “through” truck traffic, thereby minimizing the need for trucks to be driven through residential areas.
- ensure that a truck destined to/from a commercial or residential development does not have to travel more than approximately 0.8 kilometres on a residential street before reaching a Truck Route.

…/2

Criteria for recommending the establishment of a Full-Time Truck Route include:

1 A Regional Street providing a reasonably direct and continuous route connecting the Central Business District with Provincial Trunk Highways or important Provincial Roads outside the City Limits.
2 A Regional Street providing a reasonably direct and continuous route connecting the Central Business District and one or more suburban communities.
3 A Regional Street connecting two or more communities or two Regional Streets.
4 A Regional Street providing a crossing of the Red or Assiniboine Rivers or a grade separation of a major railway.
5 A street that provides for trucking movements within an industrial park or other industrial/commercial area that, if designated a Truck Route, would make unlawful the use of adjacent residential streets by trucks.

Where all of the following conditions apply, consideration can be given to the designation of the route as a Part-Time Truck Route (07:00 to 19:00 Monday to Saturday) if:

a) there is no facility that generates truck trips during the evening/night immediately adjacent to the route; and
b) there are adequate alternate routes for truck travel; and,
c) there is significant residential development on the route.

When we consider the rationale for truck routes and the criteria used to determine truck routes, Saskatchewan Avenue fits the criteria and meets the rationale.

While it would be ideal to not have truck routes adjacent to residential areas such will most likely never be the case in Winnipeg. As our city expanded, residential developments encroached on the economic routes and the industries and businesses adjacent to them. We have many examples of this scenario in our city. While this is not the best possible scenario, it is a reality we must deal with. Alternately when development is anticipated or planned for a region, buffer zones should be considered to segregate industrial and business areas and economic routes from residential areas.

While we recognize that at this point this committee will be making a decision regarding the speed limit on this roadway, we believe it is only a matter of time before there will be a movement to reduce or eliminate truck traffic from this street. In fact, at its April 11, 2006 meeting this committee recommended that the administration review and report back to this committee on the option of

…/3

reducing Saskatchewan Avenue to a part time truck route as well as reducing the speed limit from 70 kph to 60 kph.

While we would prefer the speed limit not be reduced, if such action were to be implemented until such time that repairs were conducted to Saskatchewan Avenue to mitigate the vibrations, then we would not object to such a change.

However, we remain on the record as being opposed to any changes that would reduce, restrict, or eliminate truck traffic from this roadway, unless an alternate route, acceptable to our industry is provided.

Currently, Saskatchewan Avenue is a major ingress and egress route between the Perimeter Highway and Murray Industrial Park. As such this roadway must be retained as a full time truck route. A recent poll of our membership indicated that the use of Saskatchewan Avenue is focused on access to Murray Industrial Park and the adjacent residential area to effect pick-ups and deliveries. There are a number of reasons this roadway is utilized. They include:

- the movement of over-dimensional loads from the industrial park, which is the preferred route rather than Sturgeon Road and Portage Avenue,
- the avoidance of the hospital zone at Sturgeon Road and Portage Avenue,
- the fact that some trucks are accessing the landfill site; and some trucks are making deliveries in the residential area,
- the fact that this route is the most direct, shortest, safest, and most logical route from Murray Industrial Park to the Perimeter Highway. and
- in comparison to the alternative route (Sturgeon Road and Portage Avenue) there is less interaction between commercial truck traffic and residential areas.

In closing, we hope this committee will give due consideration to our views and concerns, along with those of the local residents.

Respectfully submitted,

R. P. Dolyniuk

Bob Dolyniuk
General Manager