Report - Standing Policy Committee on Protection and Community Services - May 23, 2008

Item No. 3 Community Incentive Grant - Old St. Vital Business Improvement Zone
(St. Vital Ward)
File PR-2.6(35)

STANDING COMMITTEE RECOMMENDATION:

On June 11, 2008, the Executive Policy Committee concurred in the recommendations of the Standing Policy Committee on Protection and Community Services and the Riel Community Committee and submits the following to Council:

1. That the following eligibility criteria for the Community Incentive Grant Program be waived in this instance, namely:

   A. The organization is a non-profit community organization offering sport or recreation services but not through the development of a sport or recreation capital project.

   B. The project is to make a significant contribution to the long-term benefit of the community-at-large in terms of improved facilities.

2. That a Community Incentive Grant in the amount of $11,416.50 be approved to the Old St. Vital Business Improvement Zone to assist with the cost of the St. Mary's Road Streetscaping project, subject to the following conditions:

   A. Confirmation of other funding sources;

   B. Approval of final plans and specifications for the project by the Director of Community Services; and

   C. The applicant entering into a formal agreement with the City of Winnipeg.

Pursuant to the Voting Requirements By-law No. 126/2003, any Community Incentive Grant that does not comply with the terms contained in the Community Incentive Grant Policy requires approval by two-thirds of the Members present at Council.

Report - Standing Policy Committee on Protection and Community Services - May 23, 2008

DECISION MAKING HISTORY:

EXECUTIVE POLICY COMMITTEE RECOMMENDATION:

On June 11, 2008, the Executive Policy Committee concurred in the recommendations of the Standing Policy Committee on Protection and Community Services and the Riel Community Committee and submitted the matter to Council.

STANDING COMMITTEE RECOMMENDATION:

On May 23, 2008, the Standing Policy Committee on Protection and Community Services concurred in the recommendation of the Riel Community Committee and submitted the matter to the Executive Policy Committee and Council.

COMMUNITY COMMITTEE RECOMMENDATION:

On May 12, 2008, the Riel Community Committee did not concur in the recommendation of the Winnipeg Public Service and recommended to the Standing Policy Committee on Protection and Community Services:

1. That the following eligibility criteria for the Community Incentive Grant Program be waived in this instance, namely:

    A. The organization is a non-profit community organization offering sport or recreation services or is a non-profit community organization that contributes to the health and well being of the community, but not through the development of a sport or recreation capital project.

    B. The project does not make a significant contribution to the long-term benefit of the community-at-large in terms of improved facilities.

2. That a Community Incentive Grant in the amount of $11,416.50, funded from the St. Vital Ward allocation, be approved to the Old St. Vital Business Improvement Zone to assist with the cost of the St. Mary's Road Streetscaping project, subject to the following conditions:

    A. Confirmation of other funding sources;
    B. Approval of final plans and specifications for the project by the Director of Community Services; and
    C. The applicant entering into a formal agreement with the City of Winnipeg,

Winnipeg

COMMUNITY INCENTIVE GRANT PROGRAM
APPLICATION EVALUATION

Applicant:	**Old St. Vital Business Improvement Zone**	**Total Project Cost:**	**$52,833.00**
Project Description:	**St. Mary's Road Streetscaping**	**Grant Requested:**	**$26,416.00**
		Maximum Allowed:	**$26,416.50**
Date of Application:	**April 30, 2008**	**% of Total Project Cost:**	**50.0 %**

Funding Source	Amount	Confirmed
Old St. Vital BIZ	$26,417.00	Yes
Total	$26,417.00	

Meets Program Eligibility and Selection Criteria		Yes	No
1 a)	Organization is a non-profit community organization offering sport or recreation services or is a non-proft community organization that contributes to the health and well being of the community;	X	
b)	through the development of a sport or recreation capital project;		X
c)	that is accessible to the community;	X	
2	Makes a significant contribution to the long-term benefit of the community at large in terms of improved facilities.		X
3	Does not compete with or duplicate other community facilities.	X	
4	Benefits the community a large and remains accessible to all members of the community.	X	
5	Includes confirmation of sufficient resources to maintain and operate completed projects.	X	
6	Clearly articulates a plan of activities including projected work schedules, material, labour, equipment and other project requirements. Project leads to the completion of a substantial physical product.	X	
7	Is feasible within the project management capabilities of the applicant.	X	
8	Total project funding is confirmed.	X	
9	Does not include any funds from the City.	X	

Criteria Exceptions:

- Organization is a non-prifit community organization offering sport or recreation services or is a non-profit community organization that contributes to the health and well being of the community; but not through the development of a sport or recreation capital project; that is accessible to the community.
- The project does not make a significant contribution to the long-term benefit of the community at large in terms of improved facilities.

Department Financial Implications:

Departmental Recommendations:

That this application be denied.

Prepared By: Community Services Department

Date: **May 1, 2008**

Application Evaluation Revised September 25, 2003

THE CITY OF WINNIPEG
COMMUNITY INCENTIVE GRANT PROGRAM
APPLICATION

Please refer to the "Guide to Applicants" for assistance completing this form.

1. Name of Organization: Old St. Vital Business Improvement Zone
2. Mailing Address: RPO Niakwa PO Box 52023
   Postal Code: R2M 5P9 Phone No.: _____
   Fax No: _____ Email: info@oldstvitalbiz.com
3. Name of designated officials to be contacted about this application:
   Name: Scott Stockwell Phone (Res.): _____
   Position: Executive Director Phone (Bus.): _____
   Name: Jim Fuller Phone (Res.): _____
   Position: Chair of StreetScaping Phone (Bus.): _____
4. How long has the organization been in operation? November 29, 1995 (Approved by City Council)
5. **CIGP Requested Amount** $ 26,416 (Max. 50% of Total Project Cost)

LIST OTHER SOURCES OF FUNDING	AMOUNT	CONFIRMED
SOURCE # 1. Old St. Vital BIZ	$ 26,417	YES ☑ NO ☐
SOURCE # 2.	$	YES ☐ NO ☐
SOURCE # 3.	$	YES ☐ NO ☐
SOURCE # 4.	$	YES ☐ NO ☐
Total Project Cost	$ 52,833	

Has this project received prior funding under the Community Incentive Grant Program? YES ☐ NO ☑

6. Name of Project: St. Mary's Rd. Streetscaping
7. Location of Project: St. Mary's Rd. between Hall Ave. and St. Anne's Rd.
   Preferred Start Date: June 2008 End Date: August 2008
8. **Detailed Project Description: Attach on separate sheets or use the reverse side of this application.**

APPLICANT SIGNATURES

I/We hereby certify that I/we am/are the authorized signing officer(s) of the applying organization and this application is accurate to the best of my/our knowledge.

SIGNATURE	TITLE/POSITION	DATE
[signature]	PRESIDENT	APRIL 21/2008
[signature]	TREASURER	APRIL 21/08

SIGNATURE TITLE/POSITION DATE

Objectives

For many years the Old St. Vital Business Improvement Zone has been striving to mark the boundaries in which it operates. Within these boundaries the Old St. Vital BIZ and members show an unprecedented amount of pride in their area. This being done would make the public and businesses are aware that they are a part of the Old St. Vital area. This awareness will result in a comradery of the community and businesses to strive for a continually prosperous Old St. Vital.

As well as priding the community the decorative poles and scroll work would serve to improve the visual aspect of the thoroughfare during commutes to and from the downtown and to impress visitors from surrounding communities and the trans Canada highway.

Another important objective is to strengthen the entrepreneurial activity within the Old St. Vital area. This objective would be supported by encouraging visitors to return to the area and show the support to the businesses within the Old St. Vital area.

The formation of Manitoba and Canada has been greatly influenced by French Canadians. To show support for bilingualism the Old St. Vital Business Improvement Zone has integrated the use of both French and English on the opposite sides of the sign. The goal in including French into the signs is to ensure French Canadians feel welcome while living in or visiting the Old St. Vital area.

Plan of Action

To complete the remainder of the Old St. Vital BIZ revitalization plans. The St. Mary's Road streetscaping initiative represents the final section of the Old St. Vital BIZ revitalization plan. The St. Mary's Rd. Streetscaping initiative consists of two parts, in ground planters and decorative poles and scroll work. The in ground planters are to be poured the summer of 2009 along with a street renewal and is not part of the funding request. The costs of the new in ground planters result in a wash because of the reduced amount of cement being used. The second portion consists of decorative poles and scroll work which are included in the

funding request. These are to be placed strategically along St. Mary's Road (See Attached Map).

Sector

The project will serve many sector of the community. The first that will be served will be the Old St. Vital Community by improve the visual and cultural aspects. The second is the commuters and visitors to the area from surrounding communities and the Trans Canada Highway. In completing this project the Old St. Vital Business Improvement Zone has employed the help of a local contractor H Paul Electric and has requested that the materials for construction be purchased from suppliers from within Winnipeg and the province of Manitoba.

Repair, Renewal and Operating Cost

Costs of repair, renewal and operating can be quite significant. For this reason the Old St. Vital Business Improvement Zone budgets for these costs. Repair cost includes bolt retightening when needed but for the most part require no maintenance. The poles are constructed from aluminum which makes them resistant to rust and meets traffic collision regulations. The poles will hold a warranty for a term of 1 year. Renewal cost will be budgeted for after the warranty period has ceased. Damage due to collision or other erroneous will be covered under the insurance held by the City of Winnipeg.

Old St. Vital BIZ

St. Mary's Road Ornamental Poles

The Old St. Vital BIZ streetscape project is entering another phase this summer. Plans are underway to extend the improvements down St. Mary's Road from the junction of St. Anne's to Hull Avenue. As part of this work, custom ornamental poles with planter baskets will be installed at the bus stops. For continuity, all fixtures, furnishings, and signage will match previous phases (see image at right).

This BIZ initiative parallels a roadway rehabilitation project in this corridor. The pole foundations and median improvements (planters and splash strips) will be provided by the City.

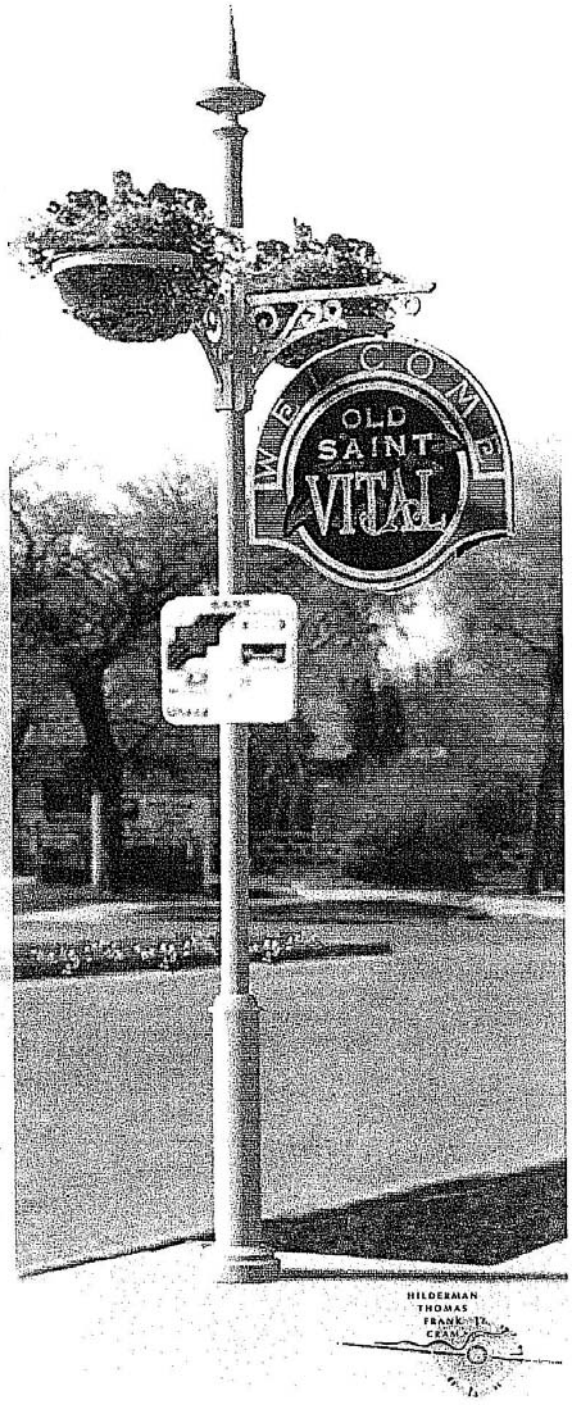

No. of poles required:	seven
Cost per pole (supply and install):	$6,739
Total Budget for poles:	$47,173

- price provided by H Paul Electric, March 6, 2008
- GST and PST are extra
- plants and fibre baskets not included
- bases to be installed by City of Winnipeg, not included in price

Old St. Vital

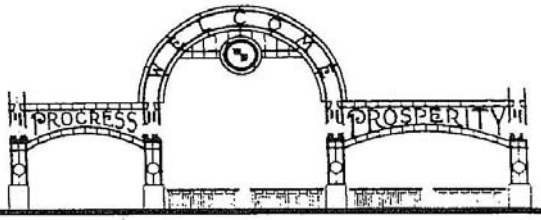

Business Improvement Zone

The poles are to be located along St. Mary's Road at seven locations:

- 2 @ Nichol Avenue
- 1 @ Kingston Row
- 1 @ Oakleigh Avenue
- 1 @ Elm Park Road
- 1 @ Sunset Boulevard
- 1 @ Kingswood Avenue

These pole locations have been approved by the Street Projects Engineer. Attached approval letter

RPO Niakwa • P.O. Box 52023 • Winnipeg, Manitoba • R2M 5P9
Phone: (204) 233-9535 • Fax: (204) 256-8072

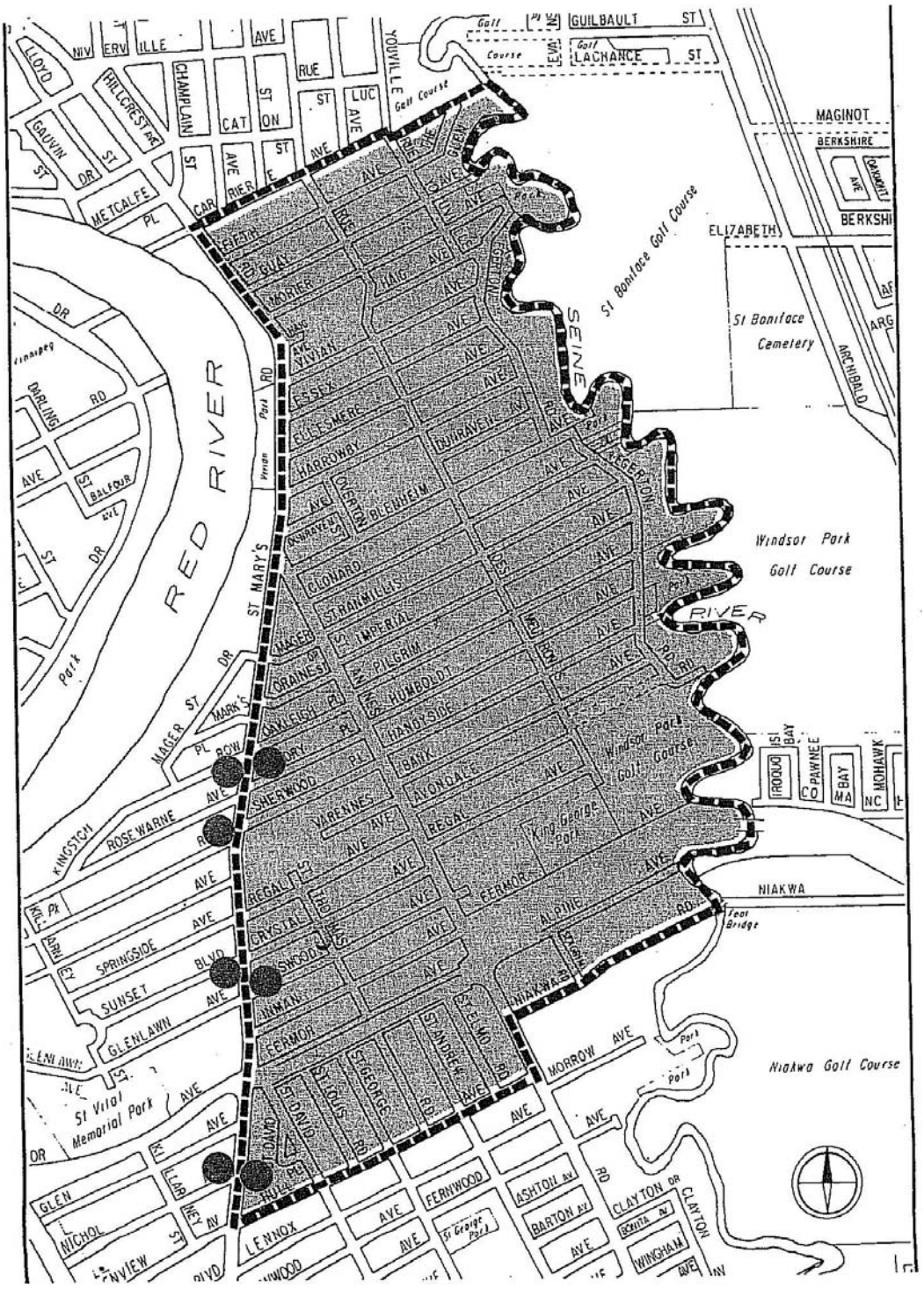
RED RIVER
SEINE
RIVER
St Boniface Golf Course
St Boniface Cemetery
Windsor Park Golf Course
Windsor Park Golf Course
King George Park
Niakwa Golf Course
St Vital Memorial Park
GUILBAULT ST
LACHANCE ST
MAGINOT
BERKSHIRE
ELIZABETH
ARCHIBALD
NIAKWA
Feet Bridge
MORROW AVE
ST MARY'S
MAGER ST
ROSEWARNE
KINGSTON
SPRINGSIDE
SUNSET
GLENLAWN
FERMOR
ALPINE
REGAL
AVONDALE
HANDYSIDE
PILGRIM
HUMBOLDT
IMPERIAL
STRANMILLIS
CLONARD
BLENHEIM
HARROWBY
ELLESMERE
ESSEX
VIVIAN
MORIER
FIFTH
GUAY
HAIG
DUNRAVEN
REGERTON
CLAYTON
WINGHAM
BARTON
ASHTON
FERNWOOD
LENNOX
NICHOL
GLEN
ST DAVID
ST LOUIS
ST GEORGE
ST ANDREW
ST ELMO
ST DAVID
HULL
MARK'S
DARLING
BALFOUR
METCALFE
GAUVIN
HILLCREST
CHAMPLAIN
CATON
RUE
LUC
YOUVILLE
LLOYD
NIVERVILLE
CARRIERE
Golf Course
Park
Vivian Park
Winnipeg
IROQUOIS
PAWNEE
BAY
MOHAWK
MA
NC
CO

Winnipeg

PUBLIC WORKS DEPARTMENT • SERVICE DES TRAVAUX PUBLICS

Transportation Engineering Division • Division de l'ingénierie des transports

File No: 08-C-02

April 18th, 2008

Top Hat Florists
Old St. Vital Biz
569 St. Mary's Road
Winnipeg, MB R2M 3Z6

Attention: Mr. Scott Stockwell

Dear Sir:

RE: OLD ST. VITAL ORNAMENTAL SIGN STANDARDS

The Public Works Department has approved the placing of seven additional Old St. Vital ornamental sign standards on St. Mary's Road at five bus stops north of Fermor Avenue and two bus stops at Nichol Avenue.

The specific locations will be subject to obtaining underground clearances.

The concrete bases for the signs have been included in the St. Mary's Road – St. Anne's Road to Fermor Avenue street rehabilitation bid opportunity.

Sincerely,

F. W. Corey, P. Eng.
Streets Project Engineer

FWC/kar

C B. W. Sacher, P. Eng., Public Works Department
D. Saedal, Supervisor of Underground Structures, Public Works Department
J. Fuller, Top Hat Florists

Embrace the Spirit • Vivez l'esprit

106 – 1155 Pacific Avenue • 1155, avenue Pacific, bureau 106 • Winnipeg • Manitoba • R3E 3P1
Fax/téléc. (204) 986-5302 • www.winnipeg.ca

O:\engineer\Letters 2008\F Corey\Old St Vital Signs April 18 08.doc

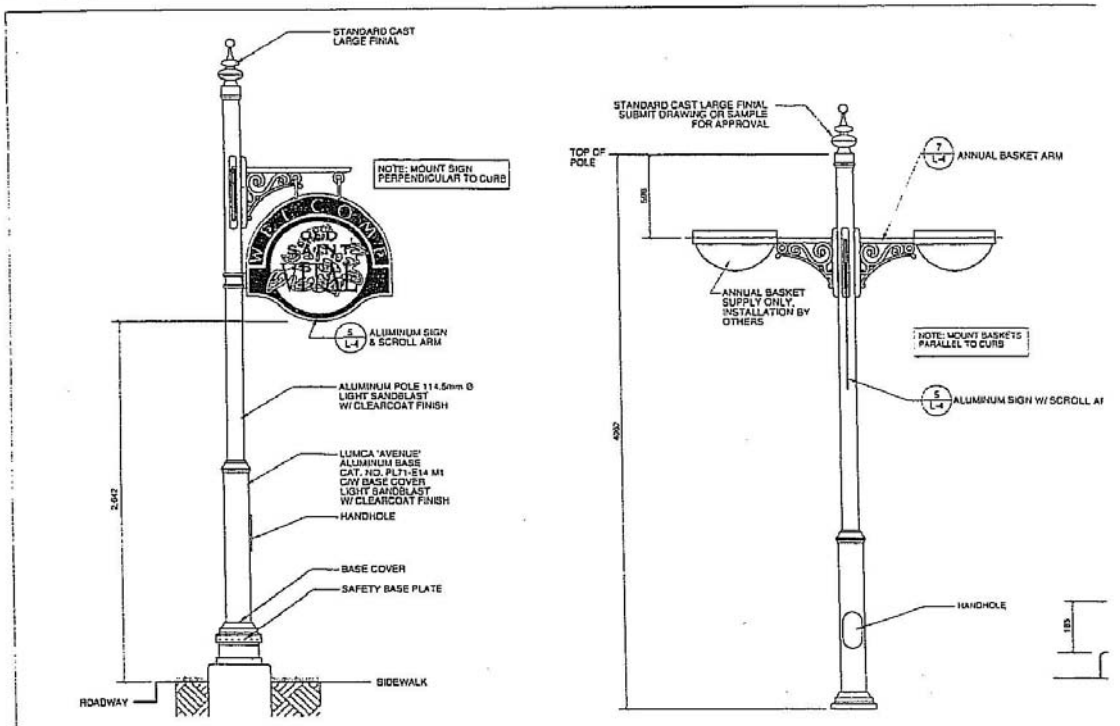

1 L-4 ORNAMENTAL SIGN STANDARD SIDE ELEVATION/SECTION
SCALE: N.T.S

2 L-4 ORNAMENTAL SIGN STANDARD - FRONT ELEVATION SCALE: N.T.S.

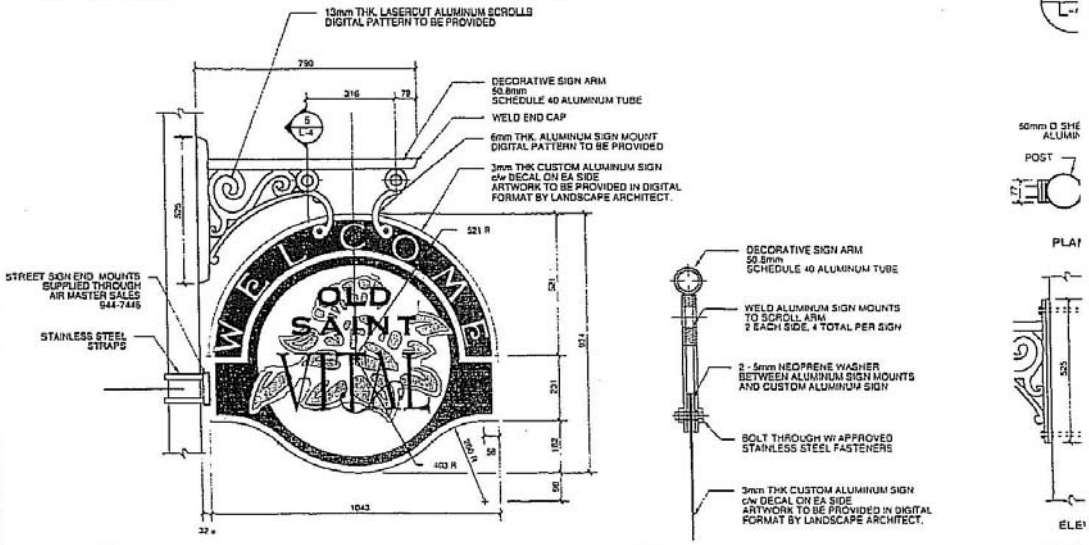

5 L-4 ALUMINUM SIGN & SCROLL ARM
SCALE: N.T.S.

6 L-4 ALUMINUM SIGN MOUNT
SCALE: N.T.S.

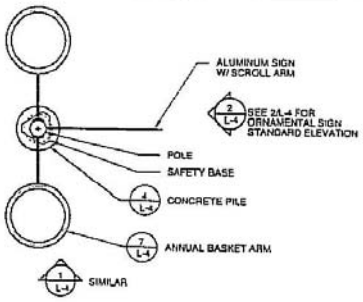

3 L-4 ORNAMENTAL LIGHT & SIGN STANDARD
PLAN VIEW
SCALE: N.T.S.

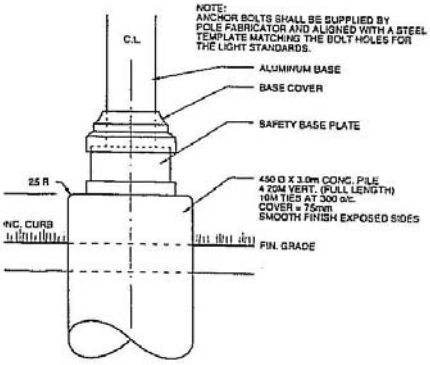

TYPICAL CONCRETE PILE FOR STANDARDS
SCALE: N.T.S.

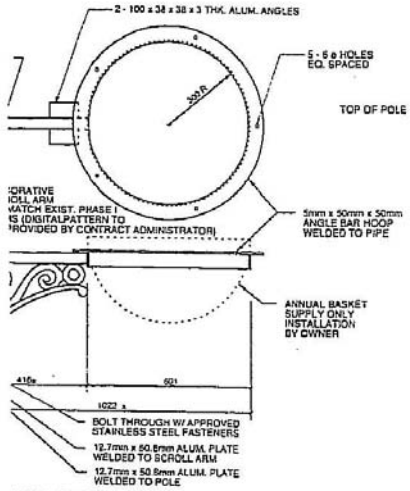

NUAL BASKET ARM
LE: N.T.S.

No.	Revision	Date
1	FOR REVIEW	FEB 14, 2006

- THIS DRAWING MUST NOT BE SCALED
- THE GENERAL CONTRACTOR SHALL VERIFY ALL DIMENSIONS, DATUMS AND LEVELS PRIOR TO COMMENCEMENT OF WORK. ALL ERRORS AND OMISSIONS TO BE REPORTED IMMEDIATELY TO THE LANDSCAPE ARCHITECT.
- VARIATIONS & MODIFICATIONS TO WORK SHOWN ON THESE DRAWINGS SHALL NOT BE CARRIED OUT WITHOUT WRITTEN PERMISSION FROM THE LANDSCAPE ARCHITECT
- THIS DRAWING IS THE EXCLUSIVE PROPERTY OF THE LANDSCAPE ARCHITECTS AND CAN BE REPRODUCED ONLY WITH THE PERMISSION OF THE LANDSCAPE ARCHITECT. IN EACH CASE THE REPRODUCTION MUST BEAR THEIR NAME AS LANDSCAPE ARCHITECTS

SOUTHEAST ST. VITAL
GATEWAY BANNER

Project Title

ORNAMENTAL SIGN
STANDARD DETAILS

Drawing Title

HILDERMAN
THOMAS
FRANK
CRAM

Landscape Architecture • Planning
500-115 Garry Avenue East, Winnipeg, Manitoba R3B 0N3
Telephone 204 • 944 • 9007 Facsimile 204 • 957 • 1457

Drawn	DM	Approved	GM
Scale	AS NOTED	Date	FEB 14, 2006
Job	05 056	Drawing	L-4