Minute No. 615
Report – Standing Policy Committee on Protection and Community Services – October 9, 2009

Item No. 3 **Community Incentive Grant – Transcona Hi Neighbour Festival Inc. (Transcona Ward)**
eFile PR-2.6(33)

COUNCIL DECISION:

Council concurred in the recommendations of the Standing Policy Committee on Protection and Community Services and adopted the following:

1. That the following eligibility criteria for the Community Incentive Grant Program be waived in this instance, namely:

   A. The project is to be through the development of a sport or recreation capital project.
   B. The project is to make a significant contribution to the long-term benefit of the community-at-large in terms of improved facilities.

2. That a Community Incentive Grant in the amount of $2,500.00, funded from the Transcona Ward allocation, be approved to the Transcona Hi Neighbour Festival Inc. to assist with the cost of the relocation and lighting of the "Hi Neighbour Sam" Monument project, subject to the following conditions:

   A. Confirmation of other funding sources;
   B. Approval of final plans and specifications for the project by the Director of Community Services; and
   C. The applicant entering into a formal agreement with the City of Winnipeg.

3. That the Proper Officers of the City be authorized to do all things necessary to implement the intent of the foregoing.

Report – Standing Policy Committee on Protection and Community Services – October 9, 2009

DECISION MAKING HISTORY:

Moved by Councillor Steeves,

That the recommendation of the Standing Policy Committee on Protection and Community Services be adopted by consent.

Carried

EXECUTIVE POLICY COMMITTEE RECOMMENDATION:

On October 21, 2009, the Executive Policy Committee concurred in the recommendations of the Standing Policy Committee on Protection and Community Services and the East Kildonan-Transcona Community Committee and submitted the matter to Council.

STANDING COMMITTEE RECOMMENDATION:

On October 9, 2009, the Standing Policy Committee on Protection and Community Services concurred in the recommendation of the East Kildonan-Transcona Community Committee and submitted the matter to the Executive Policy Committee and Council.

COMMUNITY COMMITTEE RECOMMENDATION:

On September 21, 2009, the East Kildonan-Transcona Community Committee did not concur in the recommendation of the Winnipeg Public Service and recommends to the Standing Policy Committee on Protection and Community Services:

1. That the following eligibility criteria for the Community Incentive Grant Program be waived in this instance, namely:

    A. The project is to be through the development of a sport or recreation capital project.
    B. The project makes a significant contribution to the long-term benefit of the community-at-large in terms of improved facilities.

2. That a Community Incentive Grant in the amount of $2,500.00, funded from the Transcona Ward allocation, be approved to the Transcona Hi Neighbour Festival Inc. to assist with the cost of the relocation and lighting of the “Hi Neighbour Sam” Monument project, subject to the following conditions:

Report – Standing Policy Committee on Protection and Community Services – October 9, 2009

DECISION MAKING HISTORY (continued):

COMMUNITY COMMITTEE RECOMMENDATION (continued)

A. Confirmation of other funding sources;
B. Approval of final plans and specifications for the project by the Director of Community Services; and
C. The applicant entering into a formal agreement with the City of Winnipeg.

COMMUNITY COMMITTEE DECISION:

On September 21, 2009, the East Kildonan-Transcona Community Committee approved a Per Capita Grant in the amount of $1,000.00, funded from the Transcona Ward allocation, to the Transcona Hi Neighbour Festival Inc. to assist with the cost of the relocation and lighting of the "Hi Neighbour Sam" Monument project.

ADMINISTRATIVE REPORT

ISSUE: Community Incentive Grant – Transcona Hi Neighbour Festival Inc.

Critical Path: East Kildonan - Transcona Community Committee

AUTHORIZATION

Author	Department Head	CFO	CAO
M. Kowal	C. Wightman		

RECOMMENDATIONS

That the Community Incentive Grant application from the Transcona Hi Neighbourhood Festival Inc., for the relocation and lighting of the “Hi Neighbour Sam” monument be denied.

IMPLICATIONS OF THE RECOMMENDATIONS

The Community Incentive Grant Program is funded under the Annual Capital Budget.

Project Name: Sam's Homecoming
Amount Requested: $3,961.15
Total Project Cost: $8,141.15

The applicant is requesting financial support to move the monument.

This application does not meet the following criteria approved by Council in 1996:

- Organization is a non-profit community organization offering sport or recreation services or is a non-profit community organization that contributes to the health and well being of the community; **but not** through the development of a sport or recreation capital project; that is accessible to the community.
- The project **does not** make a significant contribution to the long-term benefit of the community at large in terms of improved facilities.

HISTORY

Please refer to the attachments.

FINANCIAL IMPACT

Financial Impact Statement

Date: September 9, 2009

Project Name: Sam's Homecoming **First Year of Program** **2009**

Community Incentive Grant

Name of Organization Transcona Hi Neighbour Festival Inc.

	2009	2010	2011	2012	2013
Capital					
Capital Expenditures Required	$ 3,961	$ -	$ -	$ -	$ -
Less: Existing Budgeted Costs	3,961	-	-	-	-
Additional Capital Budget Required	$ -	$ -	$ -	$ -	$ -
Funding Sources:					
Debt - Internal	$ -	$ -	$ -	$ -	$ -
Debt - External	-	-	-	-	-
Grants (Enter Description Here)	-	-	-	-	-
Reserves, Equity, Surplus	-	-	-	-	-
Other - Enter Description Here	-	-	-	-	-
Total Funding	$ -	$ -	$ -	$ -	$ -
Total Additional Capital Budget Required	$ -				
Total Additional Debt Required	$ -				
Current Expenditures/Revenues					
Direct Costs	$ -	$ -	$ -	$ -	$ -
Less: Incremental Revenue/Recovery	-	-	-	-	-
Net Cost/(Benefit)	$ -	$ -	$ -	$ -	$ -
Less: Existing Budget Amounts	-	-	-	-	-
Net Budget Adjustment Required	$ -	$ -	$ -	$ -	$ -

Additional Comments:

There are no financial implications associated with this report.

Original Signed By:

Cindy Fernandes, CMA

Manager, Finance & Administrative Services

CONSULTATION

In preparing this Report there was consultation with:

- The applicant: Transcona Hi Neighbour Festival Inc.

SUBMITTED BY

Department: Community Services
Division: Community Development and Recreation Services
Prepared by: M. Kowal, Recreation Technician, Community Incentive Grant Program
Date: September 17, 2009
File No.

Attachments


Evaluation


Application


Supporting Documentation

Winnipeg

COMMUNITY INCENTIVE GRANT PROGRAM
APPLICATION EVALUATION

Applicant:	**Transcona Hi Neighbour Festival Inc.**	**Total Project Cost:**	**$8,141.15**
Project Description:	**Sam's Homecoming**	**Grant Requested:**	**$3,961.15**
		Maximum Allowed:	**$4,070.58**
Date of Application:	**September 8, 2009**		
		% of Total Project Cost:	**48.7 %**

Funding Source	Amount	Confirmed
Transcona Biz	$2,500.00	Yes
Service Clubs	$800.00	Yes
Public Donations	$80.00	Yes
Canad Inn	$800.00	No
Total	$4,180.00	

Meets Program Eligibility and Selection Criteria		Yes	No
1 a)	Organization is a non-profit community organization offering sport or recreation services or is a non-profit community organization that contributes to the health and well being of the community;	X	
b)	through the development of a sport or recreation capital project;		X
c)	that is accessible to the community;	X	
2	Makes a significant contribution to the long-term benefit of the community at large in terms of improved facilities.		X
3	Does not compete with or duplicate other community facilities.	X	
4	Benefits the community a large and remains accessible to all members of the community.	X	
5	Includes confirmation of sufficient resources to maintain and operate completed projects.	X	
6	Clearly articulates a plan of activities including projected work schedules, material, labour, equipment and other project requirements. Project leads to the completion of a substantial physical product.	X	
7	Is feasible within the project management capabilities of the applicant.	X	
8	Total project funding is confirmed.		X
9	Does not include any funds from the City.	X	

Criteria Exceptions:

Organization is a non-profit community organization offering sport or recreation services or is a non-profit community organization that contributes to the health and well being of the community; but not through the development of a sport or recreation capital project; that is accessible to the community.
The project does not make a significant contribution to the long-term benefit of the community at large in terms of improved facilities.

Note: The applicant is seeking funding support for moving of the icon.

Department Financial Implications:

Departmental Recommendations:

That this application be denied.

Prepared By: Community Services Department

Date: **September 8, 2009**

Application Evaluation Revised September 25, 2003

THE CITY OF WINNIPEG
COMMUNITY INCENTIVE GRANT PROGRAM
APPLICATION

Please refer to the "Guide to Applicants" for assistance completing this form.

1. Name of Organization: TRANSCONA HI NEIGHBOUR FESTIVAL INC.
2. Mailing Address: P.
   Postal Code: R2 Phone No.: 222
   Fax No: 2 Email: WWW. (WEB SI
3. Name of designated officials to be contacted about this application:
   Name: JEAN DELORME Phone (Res.): 2
   Position: HI NEIGHBOUR FUNDRAISER Phone (Bus.): 22
   Name: LAUREL DUPONT Phone (Res.): 2
   Position: HI NEIGHBOUR VICE CHAIR Phone (Bus.): 4
4. How long has the organization been in operation? 44 YRS
5. **CIGP Requested Amount** $ 3,961.15 (Max. 50% of Total Project Cost)

LIST OTHER SOURCES OF FUNDING	**AMOUNT**	**CONFIRMED**
SOURCE # 1. TRANSCONA BIZ.	$ 2500.00	YES ☑ NO ☐
SOURCE # 2. SERVICE CLUBS	$ 800.00	YES ☑ NO ☐
SOURCE # 3. PUBLIC DONATIONS	$ 80.00	YES ☑ NO ☐
SOURCE # 4. CANAD INN	$ 800.00	YES ☐ NO ☑
Total Project Cost	$ 8,141.15	

Has this project received prior funding under the Community Incentive Grant Program? YES ☐ NO ☑

6. Name of Project: SAM'S HOMECOMING
7. Location of Project: MEDIAN BY 126 REGENT AVE. WEST
   Preferred Start Date: SEPT. 30, 2009 End Date: OCT. 23/09
8. **Detailed Project Description: Attach on separate sheets or use the reverse side of this application.**

APPLICANT SIGNATURES

I/We hereby certify that I/we am/are the authorized signing officer(s) of the applying organization and this application is accurate to the best of my/our knowledge.

SIGNATURE	TITLE/POSITION	DATE
Jean DeLorme		Aug. 23/09
L Dupont	Vice-Chairperson	Aug. 24/09

SIGNATURE TITLE/POSITION DATE

SAM'S HOMECOMING

The Transcona Hi Neighbour Festival began in 1965 as a Community project. Local service organizations wanted to create a fun time for the residents of Transcona and wanted to bring community spirit to the area. Hence, the Transcona Hi Neighbour Festival was born.

Fourty-four years later the Transcona Hi Neighbour Festival is still going strong and has over 12,000 attending this three day event.

In 1968, it was decided by the community that they needed an icon as a symbol of this Festival. Mr. Barone and Mr. Petrie created a symbolic statue that would depict the friendliness of the community and would also represent the Festival. Hi Neighbour Sam was created with a top hat and a cane and was the welcoming and greeting figure for the Festival.

The statue was erected on a site at the Crossroads Shopping Centre. When the construction of a new restaurant took place, Hi Neighbour Sam was moved to a location on the north side of Regent, East of Kildonan Place.

In 1999, Sam was on the move again. Canadian Tire graciously accepted Sam and he now stands in their parking lot at 1519 Regent Ave. West.

In 2007, Councillor Russ Wyatt suggested that Jean Delorme start the process of moving Sam, so that he could be located closer to the Downtown Transcona area.

After many years of working on this project, Jean was able to secure a spot for Sam. Hi Neighbour Sam's new greeting location will be in the median by the CanadInn Transcona at 826 Regent Ave. West.

Jean and friends have been fundraising for Sam's new move for about two years now and would like to see Sam moved to a permanent home. A Community Incentive Grant is being sought to assist with the costs of "Bringing Sam Home Again".

Kowal, Monika

From: Kowal, Monika
Sent: Tuesday, September 08, 2009 2:16 PM
To: 'another look bridal fashions'
Subject: RE: Hi Neighbour Sam Move

Hello,

Thank you for attached clarification.

From: another look bridal fashions [mailto:bridalfashions@shaw.ca]
Sent: Tuesday, September 08, 2009 12:14 PM
To: Kowal, Monika
Subject: Hi Neighbour Sam Move

Hi Monica:

As per our conversation this morning, please find enclosed the following items we need for funding to move Sam Statue to its new location.

Solar Lighting ----------$5,882.50
Armstrong Craning to move Sam ---------$300.00
Patch Canadian Tire Lot ----------$100.00
Total -------$6282.50

Thankyou for your help & support in this request to move a very famous Icon in Manitoba to where Sam really belongs. If you have any more questions please call me at 222-4599 [illegible]. I look forward to hearing from you soon.

Jean DeLorme



BUDGET FOR MOVING HI NEIGHBOUR SAM

	Leave and License	$ 204.75
	City of Winnipeg base information	357.50
	Underground Structures Circulation	420.00
	Structural Engineering Fees	448.00
*	Supply & Install floodlights	5,882.50
*	Moving Sam 1-2 KLM's	300.00
*	Patch Canadian Tire Lot 4 sq. ft.	100.00
	Investigation, Schematic Design/Construction Documents	428.40
		$ 8,141.15

Please note that the above project has received "donations in kind" for the following:

Painting Sam original colours - $1,300.00

Pile Driving on new site - 800.00

$ 2,100.00 - **Donated**

MONETARY DONATIONS FOR SAM'S HOMECOMING - CONFIRMED

Transcona Biz	$2,500.00
Rotary Club (East End)	200.00
Knights of Columbus 13185	200.00
Transcona Legion	200.00
Transcona Rotary Club	200.00
Public Donations	80.00
	$3,380.00

MONETARY DONATIONS FOR SAM'S HOMECOMING –UNCONFIRMED

CanadInn	600.00

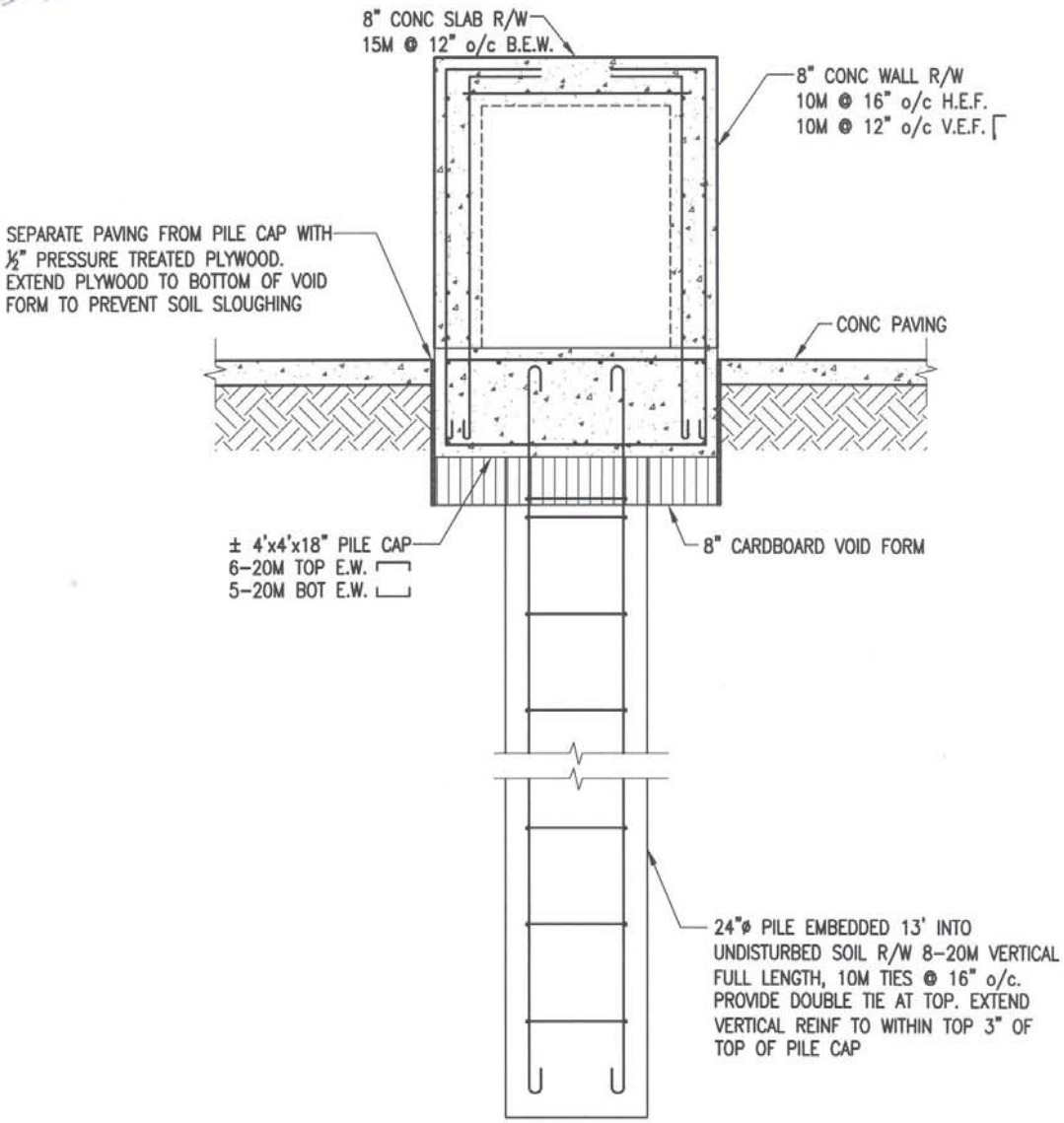

1 / SK-1 **CONCRETE FOUNDATION & BASE**

1/2" = 1'-0"

300-275 Carlton Street
Winnipeg, Manitoba R3C 5R6
T 204. 943. 7501
F 204. 943. 7507

Crosier Kilgour & Partners Ltd.
CONSULTING STRUCTURAL ENGINEERS

Project: HI NEIGHBOUR SAM MONUMENT — WINNIPEG — MANITOBA				
Sheet Title: CONCRETE FOUNDATION & BASE				Sheet No.: SK-1
Design: KJH	Drawn: MS	Date: 15 MAY 2009	File: 2009-0493	

GENERAL NOTES

1. DO NOT SCALE DRAWINGS.
2. ALL DIMENSIONS ARE TO BE VERIFIED WITH THE PROJECT DRAWINGS AND EXISTING SITE CONDITIONS PRIOR TO CONSTRUCTION.
3. THIS STRUCTURAL DRAWING SHOWS THE COMPLETED STRUCTURE AND DOES NOT INDICATE ALL COMPONENTS NECESSARY FOR SAFETY DURING CONSTRUCTION. THE CONTRACTOR SHALL BE SOLELY RESPONSIBLE FOR SAFETY ON AND AROUND THE JOBSITE DURING CONSTRUCTION.

FOUNDATIONS

1. THE FOUNDATION AND GENERAL CONTRACTORS SHALL SATISFY THEMSELVES AS TO THE PREVAILING CONDITIONS AT THE SITE AS NO EXTRAS SHALL BE GRANTED FOR PILE INSTALLATION.
2. THE FRICTION PILE IS DESIGNED ON AN ALLOWABLE SKIN FRICTION OF 300 P.S.F. EFFECTIVE LENGTH OF FRICTION PILES IS TOTAL LENGTH AS SHOWN ON PLAN MINUS 8'–0".
3. PROVIDE 10 MIL WRAPPED SONOTUBE, GREASED COMPLETELY ON INSIDE FOR TOP 6'–0" OF PILE.

CAST–IN–PLACE CONCRETE

I CONCRETE

1. ALL CONCRETE IS TO BE MANUFACTURED AND INSTALLED IN ACCORDANCE WITH THE LATEST EDITION OF CAN/CSA–A23.1 "CONCRETE MATERIALS AND METHODS OF CONCRETE CONSTRUCTION" AND CAN/CSA–A23.2 "METHOD OF TEST FOR CONCRETE".
2. CONCRETE STRENGTHS AT 28 DAYS SHALL BE AS FOLLOWS UNLESS NOTED OTHERWISE ON THE DRAWINGS.

PILE AND PILE CAP: 35 MPa MIN. AT 56 DAYS
CLASS OF EXPOSURE: S–1
ENTRAINED AIR/CATEGORY: 2 (4% TO 7%)
CEMENT TYPE: HS
AGGREGATE: MAX. 20 mm
CURING TYPE: 1
DESIGN SLUMP: MIN. 120 mm

EXTERIOR CONCRETE ELEMENTS: 25 MPa MIN. AT 28 DAYS
CLASS OF EXPOSURE: F–2
ENTRAINED AIR/CATEGORY: 2 (4% TO 7%)
AGGREGATE MAX. 20 mm
CURING TYPE: 1

3. AIR ENTRAINING ADMIXTURES SHALL CONFORM TO THE REQUIREMENTS OF ASTM C260 "STANDARD SPECIFICATION FOR AIR ENTRAINING ADMIXTURES FOR CONCRETE". AIR ENTRAINED ADMIXTURES TO HAVE A DURABILITY FACTOR GREATER THAN 75, WHEN TESTED TO ASTM STANDARDS C666 PROCEDURE A.

II REINFORCING STEEL

1. ALL REINFORCING STEEL TO BE CAN/CSA–G30.18M GRADE 400R DEFORMED BARS EXCEPT TIES WHICH SHALL BE GRADE 400W STEEL. ALL REINFORCING IS TO BE DETAILED IN ACCORDANCE WITH THE LATEST EDITION OF THE ACI DETAILING MANUAL, EXCEPT OTHERWISE NOTED.
2. REINFORCING STEEL COVER IS TO CONFORM TO CAN/CSA A23.3–04 "DESIGN OF CONCRETE STRUCTURES FOR BUILDINGS".
3. IN WALLS, BEND ALL TOP AND INTERMEDIATE HORIZONTAL STEEL 12" AROUND CORNERS.
4. ALL REINFORCING TO BE HELD IN PLACE, AND TIED BY THE USE OF PROPER ACCESSORIES, SUCH AS HI–CHAIRS, SPACERS, ETC. TO BE SUPPLIED BY THE REINFORCING STEEL FABRICATOR. HI–CHAIRS TO HAVE 4 LEGS AND TO BE STAPLED OR NAILED TO THE FORMWORK.

300-275 Carlton Street
Winnipeg, Manitoba R3C 5R6
T 204. 943. 7501
F 204. 943. 7507

Crosier Kilgour & Partners Ltd.
CONSULTING STRUCTURAL ENGINEERS

Project				
HI NEIGHBOUR SAM MONUMENT WINNIPEG MANITOBA				
Sheet Title: GENERAL NOTES				Sheet No.: SK-2
Design: KJH	Drawn: MS	Date: 15 MAY 2009	File: 2009-0493	

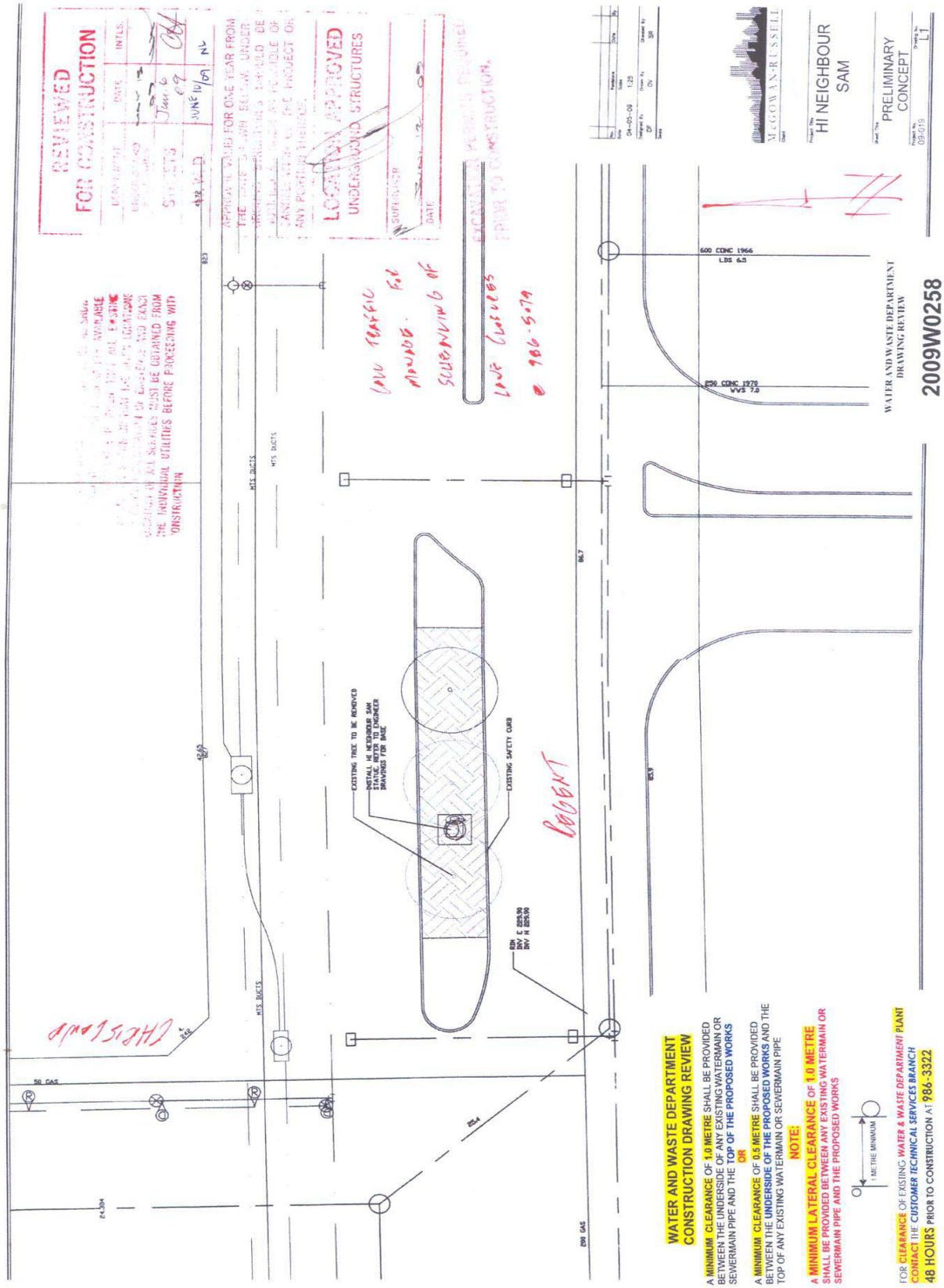
REVIEWED
FOR CONSTRUCTION
APPROVED
UNDERGROUND STRUCTURES
PRELIMINARY
CONCEPT
HI NEIGHBOUR
SAM
2009W0258
WATER AND WASTE DEPARTMENT
CONSTRUCTION DRAWING REVIEW
A MINIMUM CLEARANCE OF 1.0 METRE SHALL BE PROVIDED BETWEEN THE UNDERSIDE OF ANY EXISTING WATERMAIN OR SEWERMAIN PIPE AND THE TOP OF THE PROPOSED WORKS
OR
A MINIMUM CLEARANCE OF 0.5 METRE SHALL BE PROVIDED BETWEEN THE UNDERSIDE OF THE PROPOSED WORKS AND THE TOP OF ANY EXISTING WATERMAIN OR SEWERMAIN PIPE
NOTE:
A MINIMUM LATERAL CLEARANCE OF 1.0 METRE SHALL BE PROVIDED BETWEEN ANY EXISTING WATERMAIN OR SEWERMAIN PIPE AND THE PROPOSED WORKS
1 METRE MINIMUM
FOR CLEARANCE OF EXISTING WATER & WASTE DEPARTMENT PLANT CONTACT THE CUSTOMER TECHNICAL SERVICES BRANCH 48 HOURS PRIOR TO CONSTRUCTION AT 986-3322

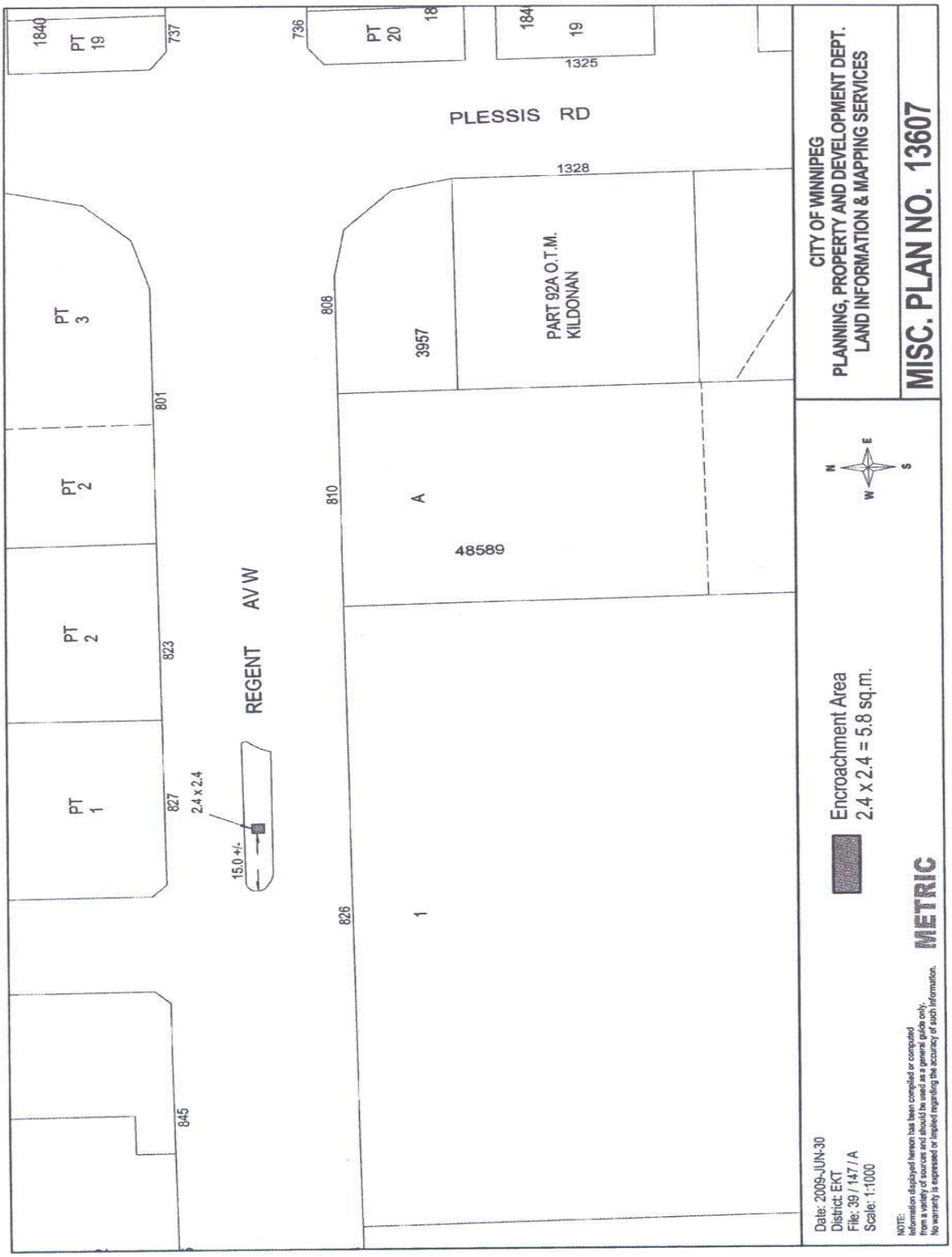
PLESSIS RD
REGENT AV W
PART 92A O.T.M.
KILDONAN
48589
3957
PT 19
PT 20
PT 3
PT 2
PT 2
PT 1
1840
737
736
1325
1328
808
801
810
823
827
826
845
2.4 x 2.4
15.0 +/-
CITY OF WINNIPEG
PLANNING, PROPERTY AND DEVELOPMENT DEPT.
LAND INFORMATION & MAPPING SERVICES
MISC. PLAN NO. 13607
Encroachment Area
2.4 x 2.4 = 5.8 sq.m.
METRIC
Date: 2009-JUN-30
District: EKT
File: 39 / 147 / A
Scale: 1:1000
NOTE:
Information displayed hereon has been compiled or computed
from a variety of sources and should be used as a general guide only.
No warranty is expressed or implied regarding the accuracy of such information.