Agenda - Executive Policy Committee – February 15, 2012

Report - Standing Policy Committee on Property and Development – February 14, 2012

Moved by Councillor

That Rule 10(3) of The Procedure By-law No. 50/2007 be suspended in order that the following item, which was received less than 96 hours preceding the committee meeting, be considered by Committee.

Item No. 2 Rezoning – 1315 Gateway Road
(North Kildonan Ward)
File DAZ 224/2011 [c/r DAV 164349/2011D]

STANDING COMMITTEE RECOMMENDATION:

On February 14, 2012, the Standing Policy Committee on Property and Development concurred in the recommendation of the East Kildonan-Transcona Community Committee and submits the following to Council:

1. That the Developer be required to enter into a Servicing Agreement with the City containing the following conditions:

    A. The developer shall, at no expense to the City, construct a 1.5m in width by 100 mm in thickness portland cement concrete sidewalk and boulevard landscaping along the south side of Springfield Road from Gateway to the end of their property as determined by and to the satisfaction of the Director of Public Works.

    B. The developer shall be required to pay, on an area basis, their share of the cost of improvements required at the Gateway and Lexington Park intersection to a maximum of $75,000.00, based the Traffic Impact Study (to which the applicant shall make no financial contribution) to be carried out for all the development proposed within the area bounded by Gateway Road, Springfield Road, the hydro corridor and the rear property line of the properties fronting on Burnett Avenue, as determined by the Director of Public Works. The City shall secure this obligation with a letter of credit.

    C. The requirement for the Gateway and Lexington Park improvements shall expire at five (5) years of the execution of the servicing agreement if not implemented.

2. That The Winnipeg Zoning By-law No. 200/2006 be amended by rezoning the subject land as shown on Schedule “A” for File DAZ 224/2011 dated November 8, 2011, to an “RMU” Residential Mixed Use District subject to the following:

Report - Standing Policy Committee on Property and Development – February 14, 2012

A. That the applicant enter into a zoning agreement with the City of Winnipeg pursuant to Subsection 240(1) of The City of Winnipeg Charter to provide for the following:

i. That all development shall be fully contained within an upward line drawn at a 45 degree angle northward beginning at a point 6 feet above the northern boundary of the Springfield Road right-of-way and rising toward the proposed building.

ii. That, for the development of any building or structure, plans shall be submitted showing the location and design of proposed buildings, the location and design of accessory parking areas, garbage enclosures, fencing, landscaping and signage to the Director of Planning, Property and Development and the East Kildonan-Transcona Community Committee for plan approval prior to the issuance of any building or development permit, and thereafter all to be maintained to the satisfaction of the Director of Planning, Property and Development.

iii. That, advertising signs, mobile signs, or A-board signs shall not be permitted on the land.

iv. That all lands lying north of the C.P.R. right-of-way along Springfield Road shall be established and maintained as a landscaped area, and no other uses excepting one (1) free standing sign to a maximum height of 6.096 metres (20 feet) and accessory to a church use shall be permitted on the land.

v. That with the exception of any approved private approaches, a minimum 3.048 metre (10 feet) in depth landscaped yard shall be established and maintained by the Owner along the full length of the Gateway Road frontage.

vi. That the existing private approaches off Gateway Road shall be closed on demand by the City, once an approach to Lexington Park becomes available either through private agreement or by Lexington Park becoming a public right of way, and that the approaches off Gateway Road shall be removed and that the curb, sidewalk, and boulevard shall be restored, at no expense to the City, as determined by and to the satisfaction of the Director of Public Works. The City shall secure this obligation with a

letter of credit, which will expire within five (5) years of the execution of the servicing agreement if not implemented.

3. That Caveat 2229705 be withdrawn as it affects Parcel "A", Plan 46618, and Parcels "A" and "B", Plan 38346.

4. That in the event the application is not proceeded with expeditiously and the by-law is not enacted within twenty-four (24) months after adoption of the report by Council, the matter shall be deemed to be concluded and shall not be proceeded with unless an extension of time is applied for prior to the expiry of this twenty-four (24) month period and the extension is subsequently approved by Council.

5. That the Director of Legal Services and City Solicitor be requested to prepare the necessary rezoning by-law and forward same to Council for all three (3) readings.

6. That the zoning section of the by-law comes into force when the Zoning Agreement is registered in the Winnipeg Land Titles Office by caveat against the subject lands, provided that the said effective date occurs within one year from the date by-law is passed.

8. That the Proper Officers of the City are hereby authorized to execute said Zoning Agreement.

9. That the Director of Legal Services and City Solicitor be requested to do all things necessary for implementation in accordance with the terms of The City of Winnipeg Charter.

Agenda - Executive Policy Committee – February 15, 2012

Report - Standing Policy Committee on Property and Development – February 14, 2012

DECISION MAKING HISTORY:

STANDING COMMITTEE RECOMMENDATION:

On February 14, 2012, the Standing Policy Committee on Property and Development concurred in the recommendation of the East Kildonan-Transcona Community Committee and submitted the matter to the Executive Policy Committee and Council.

COMMUNITY COMMITTEE RECOMMENDATION:

On January 17, 2012, the East Kildonan-Transcona Community Committee concurred in the recommendation of the Winnipeg Public Service, with the following amendments:

- Add the following Recommendations 1. B. and C.

    B. The Developer shall be required to pay, on an area basis, their share of the cost of improvements required at the Gateway and Lexington Park intersection to a maximum of $75,000.00, based the Traffic Impact Study (to which the applicant shall make no financial contribution) to be carried out for all the development proposed within the area bounded by Gateway Road, Springfield Road, the hydro corridor and the rear property line of the properties fronting on Burnett Avenue, as determined by the Director of Public Works. The City shall secure this obligation with a letter of credit.

    C. The requirement for the Gateway and Lexington Park improvements shall expire at five (5) years of the execution of the servicing agreement if not implemented.

- Delete Recommendation 2. vi. and replace with the following:

    vi. That the existing private approaches off Gateway Road shall be closed on demand by the City, once an approach to Lexington Park becomes available either through private agreement or by Lexington Park becoming a public right of way, and that the approaches off Gateway Road shall be removed and that the curb, sidewalk, and boulevard shall be restored, at no expense to the City, as determined by and to the satisfaction of the Director of Public Works. The City shall secure this obligation with a letter of credit, which will expire within five (5) years of the execution of the servicing agreement if not implemented.

DECISION MAKING HISTORY: (continued)

COMMUNITY COMMITTEE RECOMMENDATION: (continued)

- Delete Recommendation 4. and renumber the remaining recommendations accordingly;

and forwarded the matter to the Standing Policy Committee on Property and Development.

On November 15, 2011, the East Kildonan-Transcona Community Committee adjourned the public hearing to its meeting on Tuesday, January 17, 2012, at 6:00 p.m. at the Bronx Park Community Centre, 720 Henderson Highway.

Further, on November 15, 2011, the East Kildonan-Transcona Community Committee directed the Winnipeg Public Service to investigate the possibility of closing the two proposed private approaches accessing Gateway Road and moving them to access Lexington Park, should Gateway Road be twined or a Traffic Circle be installed at the intersection of Gateway Road and Lexington Park.

RE: **Rezoning – 1315 Gateway Road**
File DAZ 224/2011

For submission to: **The Standing Policy Committee on Property and Development**

Prepared by: **Carlos Gameiro, Senior Committee Clerk**
East Kildonan-Transcona Community Committee

Report date: **January 18, 2012**

COMMUNITY COMMITTEE RECOMMENDATION:

On January 17, 2012, the East Kildonan-Transcona Community Committee concurred in the recommendation of the Winnipeg Public Service and recommends to the Standing Policy Committee on Property and Development:

1. That the Developer be required to enter into a Servicing Agreement with the City containing the following conditions:

    A. The developer shall, at no expense to the City, construct a 1.5m in width by 100 mm in thickness portland cement concrete sidewalk and boulevard landscaping along the south side of Springfield Road from Gateway to the end of their property as determined by and to the satisfaction of the Director of Public Works.

    B. The developer shall be required to pay, on an area basis, their share of the cost of improvements required at the Gateway and Lexington Park intersection to a maximum of $75,000.00, based the Traffic Impact Study (to which the applicant shall make no financial contribution) to be carried out for all the development proposed within the area bounded by Gateway Road, Springfield Road, the hydro corridor and the rear property line of the properties fronting on Burnett Avenue, as determined by the Director of Public Works. The City shall secure this obligation with a letter of credit.

    C. The requirement for the Gateway and Lexington Park improvements shall expire at five (5) years of the execution of the servicing agreement if not implemented.

2. That The Winnipeg Zoning By-law No. 200/2006 be amended by rezoning the subject land as shown on Schedule "A" for File DAZ 224/2011 dated November 8, 2011, to an "RMU" Residential Mixed Use District subject to the following:

    A. That the applicant enter into a zoning agreement with the City of Winnipeg pursuant to Subsection 240(1) of The City of Winnipeg Charter to provide for the following:

i. That all development shall be fully contained within an upward line drawn at a 45 degree angle northward beginning at a point 6 feet above the northern boundary of the Springfield Road right-of-way and rising toward the proposed building.

ii. That, for the development of any building or structure, plans shall be submitted showing the location and design of proposed buildings, the location and design of accessory parking areas, garbage enclosures, fencing, landscaping and signage to the Director of Planning, Property and Development and the East Kildonan-Transcona Community Committee for plan approval prior to the issuance of any building or development permit, and thereafter all to be maintained to the satisfaction of the Director of Planning, Property and Development.

iii. That, advertising signs, mobile signs, or A-board signs shall not be permitted on the land.

iv. That all lands lying north of the C.P.R. right-of-way along Springfield Road shall be established and maintained as a landscaped area, and no other uses excepting one (1) free standing sign to a maximum height of 6.096 metres (20 feet) and accessory to a church use shall be permitted on the land.

v. That with the exception of any approved private approaches, a minimum 3.048 metre (10 feet) in depth landscaped yard shall be established and maintained by the Owner along the full length of the Gateway Road frontage.

vi. ~~***That the existing private approaches off Gateway Road shall be closed once an approach to Lexington Park is established, and that these approaches shall be removed and that the curb, sidewalk, and boulevard shall be restored as determined by and to the satisfaction of the Director of Public Works.***~~

That the existing private approaches off Gateway Road shall be closed on demand by the City, once an approach to Lexington Park becomes available either through private agreement or by Lexington Park becoming a public right of way, and that the approaches off Gateway Road shall be removed and that the curb, sidewalk, and boulevard shall be restored, at no expense to the City, as determined by and to the satisfaction of the Director of Public Works. The City shall secure this obligation with a letter of credit, which will expire within five (5) years of the execution of the servicing agreement if not implemented.

3. That Caveat 2229705 be withdrawn as it affects Parcel "A", Plan 46618, and Parcels "A" and "B", Plan 38346.

~~***4. That a ten percent (10%) dedication be made by a payment of a sum of money to the City in lieu of the requirement for land dedication based on the increase in market value of the land.***~~

~~***5***~~***.4.*** That in the event the application is not proceeded with expeditiously and the by-law is not enacted within twenty-four (24) months after adoption of the report by Council, the matter shall be deemed to be concluded and shall not be proceeded with unless an extension of time is applied for prior to the expiry of this twenty-four (24) month period and the extension is subsequently approved by Council.

~~***6***~~***.5.*** That the Director of Legal Services and City Solicitor be requested to prepare the necessary rezoning by-law and forward same to Council for all three (3) readings.

~~***7***~~***.6.*** That the zoning section of the by-law comes into force when the Zoning Agreement is registered in the Winnipeg Land Titles Office by caveat against the subject lands, provided that the said effective date occurs within one year from the date by-law is passed.

~~***8***~~***.7.*** That the Proper Officers of the City are hereby authorized to execute said Zoning Agreement.

~~***9***~~***. 8.*** That the Director of Legal Services and City Solicitor be requested to do all things necessary for implementation in accordance with the terms of The City of Winnipeg Charter.

Note: The wording in bold and italics denotes amendments made by the Community Committee.

The East Kildonan-Transcona Community Committee provided the following supporting reasons for its recommendation:

1. It's great to see private, non-profit housing development in North Kildonan. People want to stay in the Communities where they go to church, shop and where their families are. This is a great opportunity for families to do that.

2. The Donwood Group is known for doing fantastic work in our communities.

3. The Donwood Group met with the immediate neighbours to discuss possible points of contention and worked with them to come to an amicable arrangement.

PUBLIC HEARING SUMMARY

File: DAZ 224/2011

Before: East Kildonan-Transcona Community Committee
Councillor Wyatt, Chairperson
Councillor Browaty
Councillor Steen

Public Hearing: January 17, 2012
Bronx Park Community Centre
720 Henderson Highway

November 15, 2011
The Royal Canadian Legion
Transcona Branch
117 Regent Avenue East

Applicant: Raymond S. C. Wan Architect
(Raymond Wan)

Subject:



Premises Affected: 1315 Gateway Road

Exhibits Filed:

1. Application dated September 26, 2011
2. Notification of Public Hearing dated October 6, 2011
3. Manitoba Status of Title 2251406
4. Letter of authorization dated August 19, 2011 from The Mennonite Brethren Church of Manitoba to Raymond S. C. Wan Architect

5a. Caveat No. 1040510 registered in the Winnipeg Land Titles Office on July 8, 1988;

5b. Caveat No. 2229705 registered in the Winnipeg Land Titles Office on July January 27, 1998;

5c. Caveat No. 2229706 registered in the Winnipeg Land Titles Office on July January 27, 1998;

6. Plan (1 page)
7. Report from the Planning and Land Use Division dated November 8, 2011
8. Communication dated October 31, 2011 from Wilf Trudeau, in opposition to the application
9. Inspection Report
10. Communication dated November 15, 2011, from Diane Dawiskiba, Senior Director, Lexington Real Estate Holdings Ltd./Palliser Furniture Holdings Ltd., with respect to the application
11. Audio Recording of representations
12. Notice of Adjournment dated November 18, 2011
13. Revised report from the Planning and Land Use Division dated January 9, 2012
14. Copy of agreement dated January 5, 2012, between Palliser Furniture Holdings Ltd., Lexington Real Estate Holdings Ltd. and North Kildonan Mennonite Brethren Church, submitted at the public hearing on January 17, 2012 by Diane Dawiskiba Palliser Furniture Holdings Ltd.
15. Audio Recording of representations of public hearing held on January 17, 2012

REPRESENTATIONS:

In Support:

Raymond Wan, Raymond S. C. Wan Architect
Henry Bergen
Paul H. Boge
Diane Dawiskiba, Senior Director, Lexington Real Estate Holdings Ltd./
Palliser Furniture Holdings Ltd.,
Peter Ewert
Walter A. Foth

James Heinrichs
Willy Janzen
Alix Jean-Paul
Gertrude Jean-Paul
Carl H. Kauenhowen
Kathy Plett
Tony Plett
Hardy Rahn
Edward Ratzlaff
Peter Rempel
David Schroeder
Vic Thielmann
Mary Unruh
Frank Vogt
Henry Wiebe
Tom Wiebe
Sara Willms

In Opposition

Betty Richardson
Wilf Trudeau
Marianne Verleih
Philip Vrsnik
Susanne Vrsnik

For Information:

Ed Gagnon
Pat Gagnon
Lorraine Garlinski
Victor Harder
John Klassen
Lydia Klassen
Cynthia Light
Art Martens
Sarah Martens
Peter Weitkowitz
Sharon Weitkowitz

For the City:

Mr. K. Raban, Land Development Administrator,
Planning, Property and Development Department
Mr. M. Pyl, Planner, Planning, Property and Development Department

Exhibit "13" referred to in File DAZ 224/2011

ADMINISTRATIVE REPORT

Title: DAZ 224/2011 – 1315 Gateway Rd **REVISED**

Issue: For consideration at the public hearing to rezone to accommodate an 11 storey apartment building

Critical Path: East Kildonan-Transcona Community Committee → Standing Policy Committee on Property and Development → Executive Policy Committee → Council

AUTHORIZATION

Author	Department Head	CFO	CAO
P. Regan	n/a	n/a	

RECOMMENDATIONS

1. That the Developer be required to enter into a Servicing Agreement with the City containing the following condition:

   A. The developer shall, at no expense to the City, construct a 1.5m in width by 100 mm in thickness portland cement concrete sidewalk and boulevard landscaping along the south side of Springfield Road from Gateway to the end of their property as determined by and to the satisfaction of the Director of Public Works.

2. That The Winnipeg Zoning By-law No. 200/06 be amended by rezoning the subject land as shown on Schedule "A" for File DAZ 224/2011 dated November 8, 2011, to a "RMU" Residential Mixed Use District subject to the following:

   A. That the applicant enter into a zoning agreement with the City of Winnipeg pursuant to Subsection 240(1) of The City of Winnipeg Charter to provide for the following:

      i. That all development shall be fully contained within an upward line drawn at a 45 degree angle northward beginning at a point 6 feet above the northern boundary of the Springfield Road right-of-way and rising toward the proposed building.

      ii. That, for the development of any building or structure, plans shall be submitted showing the location and design of proposed buildings, the location and design of accessory parking areas, garbage enclosures, fencing, landscaping and signage to the Director of Planning, Property and Development and the East Kildonan-Transcona Community Committee for plan approval prior to the issuance of any building or development permit, and thereafter all to be maintained to the satisfaction of the Director of Planning, Property and Development.

iii. That, advertising signs, mobile signs, or A-board signs shall not be permitted on the land.

iv. That all lands lying north of the C.P.R. right-of-way along Springfield Road shall be established and maintained as a landscaped area, and no other uses excepting one (1) free standing sign to a maximum height of 6.096 metres (20 feet) and accessory to a church use shall be permitted on the land.

v. That with the exception of any approved private approaches, a minimum 3.048 metre (10 feet) in depth landscaped yard shall be established and maintained by the Owner along the full length of the Gateway Road frontage.

vi. That the existing private approaches off Gateway Road shall be closed once an approach to Lexington Park is established, and that these approaches shall be removed and that the curb, sidewalk, and boulevard shall be restored as determined by and to the satisfaction of the Director of Public Works.

3. That Caveat 2229705 be withdrawn as it affects Parcel "A", Plan 46618, and Parcels "A" and "B", Plan 38346.

4. That a ten percent (10%) dedication be made by a payment of a sum of money to the City in lieu of the requirement for land dedication based on the increase in market value of the land.

5. That in the event the application is not proceeded with expeditiously and the by-law is not enacted within twenty-four (24) months after adoption of the report by Council, the matter shall be deemed to be concluded and shall not be proceeded with unless an extension of time is applied for prior to the expiry of this twenty-four (24) month period and the extension is subsequently approved by Council.

6. That the Director of Legal Services and City Solicitor be requested to prepare the necessary rezoning by-law and forward same to Council for all three (3) readings.

7. That the zoning section of the by-law comes into force when the Zoning Agreement is registered in the Winnipeg Land Titles Office by caveat against the subject lands, provided that the said effective date occurs within one year from the date by-law is passed.

8. That the Proper Officers of the City are hereby authorized to execute said Zoning Agreement.

9. That the Director of Legal Services and City Solicitor be requested to do all things necessary for implementation in accordance with the terms of The City of Winnipeg Charter.

REASON FOR THE REPORT

- The property owner, North Kildonan Mennonite Brethren Church, intends to develop an 11 storey, 180-unit multifamily dwelling along the east edge of the subject property. This dwelling will be marketed to 55+ adults.
- The subject property is designated as a Major Redevelopment Site in OurWinnipeg and the Complete Communities Direction Strategy.

IMPLICATIONS OF THE RECOMMENDATIONS

If the recommendations of the Planning and Land Use Division are concurred in, the subject property will be rezoned.

CONSULTATION

In preparing this report there was consultation with:

N/A

SUBMITTED BY

Department	Planning, Property and Development
Division	Planning and Land Use
Prepared by	Michael Pyl
Date:	January 9, 2011
File No.	DAZ 224/11

APPENDIX 'A'

DATE: January 9, 2011
FILE: DAZ 224/2011
RELATED FILES: DAV 11-164349/D
COMMUNITY: East Kildonan-Transcona
NEIGHBOURHOOD #: 4.420

SUBJECT: To rezone the subject property from "M1" Manufacturing Light district to "RMU" Residential Mixed Use district.

LOCATION: 1315 Gateway Rd

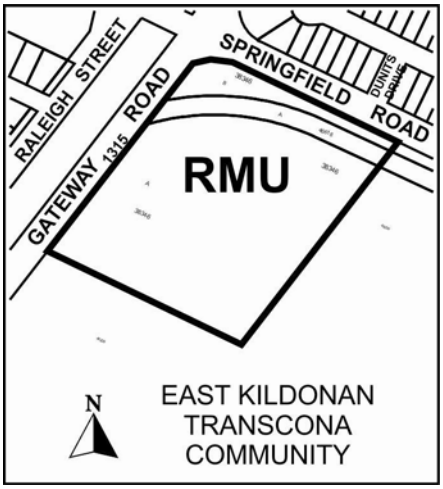

APPLICANT: Raymond S.C. Wan Architect
1250 Waverley St Unit 1
Winnipeg, MB R3T 6C6

OWNER: The Mennonite Brethren Church of Manitoba
1315 Gateway Rd
Winnipeg, MB R2G 1G5

RECOMMENDATION: Approval

REPORT SUMMARY

- The property owner, North Kildonan Mennonite Brethren Church, intends to develop an 11 storey, 180-unit multifamily dwelling along the east edge of the subject property. This dwelling will be marketed to 55+ adults.
- The subject property is designated as a Major Redevelopment Site in OurWinnipeg and the Complete Communities Direction Strategy.

SITE DESCRIPTION

- The subject property is located at the southeast corner of Gateway Rd and Springfield Rd in the Springfield South neighbourhood of the North Kildonan ward.
- The subject property is 8.5 acres, with approximately 600 ft. of frontage along Gateway and 480 ft. of frontage along Springfield. It is currently occupied by the North Kildonan Mennonite Brethren Church towards the northwest corner of the site.
- Adjacent properties include the Palliser Furniture warehouse to the south and east (and surrounding lands which are otherwise undeveloped) zoned “M1” Manufacturing Light district, single family dwellings to the north across Springfield zoned “R1-M” Residential Single Family district, and single family dwellings to the west across Gateway and Raleigh St zoned “R1-L”.



Figure 1: Site map of subject property and surrounding neighbourhood

DESCRIPTION OF THE PROPOSED DEVELOPMENT

- The property owner, North Kildonan Mennonite Brethren Church, intends to develop an 11 storey, 180-unit multifamily dwelling along the east edge of the subject property. This dwelling will be marketed to 55+ adults.
- The northernmost wall of the building will be set back 152 ft. from the north property line along Springfield and 25 ft. from the east property line.
- In total, there will be 528 parking stalls provided on the subject property. With 150 spaces allocated to the church assembly area and 184 spaces to the banquet hall, there will be 193 spaces allocated to the apartment building.

- Detailed elevations and site plans have not been provided at the time of application.

BACKGROUND

DAZ 211/89

- On July 12, 1989, Council rezoned the subject property, as well as other land extending as far east as the transmission line corridor, from an “M2” Industrial district to an “RM-1” Multiple-Family district and a “C2” General Commercial district to allow for a planned commercial and residential development.
- As a condition of approval, a zoning agreement was placed on the property. It required that:
    - On the “RM-1” land, there shall be no more than 230 dwelling units, and multiple-family dwellings shall not exceed seven storeys in height.
    - On the “C2” land, no multiple-family dwellings shall exceed seven storeys in height, no building for retail or service uses shall exceed 40 ft. in height, that the total gross leasable floor area for retail and service uses shall no exceed 160,000 sq. ft., that the maximum gross leasable floor area at ground or main level of any building shall not exceed 100,000 sq. ft., and the gross leasable floor area above the ground or main level of a building or buildings shall be used only for “offices”.
    - Plan approval for building location and design, exterior materials and elevations, accessory parking and loading areas, landscaping and fencing, points of egress, signs, and garbage enclosures to the East Kildonan-Transcona Community Committee and the Director of Planning, Property, and Development.
- This application was heard in concurrence with a Plan Winnipeg Amendment to designate the lands from “Industrial” policy area to a “Suburban Residential Neighbourhood” policy area. Council gave third reading to this by-law on January 4, 1989.
- When Council passed this rezoning as By-law No. 5441/90, it contained a provision that it would not come into force and effect until the zoning agreement was registered. This zoning agreement was never registered. As a result, this by-law was repealed by Council in February, 2002.

DAZ 222/96

- In 1997, Council rezoned the subject property, as well as other land extending as far east as the transmission line corridor, from “M2” Industrial district to “M1-B” Industrial district.
- The property was divided into Site #1 and Site #2. Site #1, comprising the current subject property, was intended to accommodate either a commercial retail/service shopping centre or industrial type development, and that prior to being developed, would be developed as a recreation centre consisting of outdoor sports fields. Site #2 was intended to accommodate up to six industrial buildings to facilitate the expansion of Palliser Furniture’s manufacturing and assembly capabilities.
- As a condition of approval, a zoning agreement was placed on the property. It prescribes that:
    - Permitted and conditional uses on both Sites #1 and #2. Of note is that these uses do not currently allow residential development.
    - A maximum building height on Site #1 of 30 ft.
    - A minimum 10 ft. landscaped yard along the full length of the Gateway Rd frontage of Site #1.
    - All lands north of the CPR right-of-way along Springfield Rd shall be established and maintained as a landscaped area only, and no other uses (including signs) shall be permitted on the land.
    - No private approach or vehicular access onto or from Springfield Rd shall be permitted.

- All free-standing signs shall be limited to a maximum of 25 ft. in height.
- Billboards, mobile signs, mobile poster signs, A-Frames, or similar temporary signs shall not be permitted.
- Plan approval for buildings, signs, fences, private approaches, parking, loading areas, and landscaped areas to the East Kildonan-Transcona Community Committee and the Director of Planning, Property, and Development.

- This application was heard in concurrence with a Plan Winnipeg Amendment to re-designate the lands from "Neighbourhood" policy area to "Industrial" area. Council gave third reading to this by-law on March 26, 1997, and came into effect when the zoning agreement for DAZ 222/96 was registered at the Winnipeg Land Titles Office.

ZAA 11/99

- On November 17, 1999, Council approved an amendment to the DAZ 222/96 zoning agreement to allow for a 45 ft. tall church with a 70 ft. tall clock tower where all development was originally limited to a height of 30 ft.
- The zoning agreement amendment also allowed for one 20 ft. free-standing sign accessory to a church in the lands north of the CPR right-of-way along Springfield, where it was previously restricted.
- This ZAA was heard in concurrence with a variance (DAV 421/99D) to permit the construction of the church with no south side yard to the accessory parking area instead of 15 ft. This was approved subject to two conditions:
    - That the applicant shall provide interior parking lot landscaping (in addition to the landscaping in the Gateway Rd frontage required as per DAZ 222/96), subject to plans approved by the East Kildonan-Transcona Community Committee.
    - Two years to establish.

DCU 163/01C

- In 2001, the Board of Adjustment approved a conditional use to permit the establishment of a day care centre in the existing church.

DAV 11-164349D

- In concurrence with this application, the applicant has also applied for a variance to permit:
    - A height of 112 ft. instead of 100 ft.
    - 193 parking spaces instead of 270 spaces.

ANALYSIS AND ISSUES

OurWinnipeg and Complete Communities Direction Strategy

- The Complete Communities Direction Strategy is one of four direction strategies supporting OurWinnipeg, the city's new long-range development plan, and is intended to gain statutory authority as a secondary plan. The strategy is intended to serve as a "playbook" to guide land use and development in Winnipeg. It received third reading at City Council on July 20, 2011, and became effective on August 17, 2011.
- According to the Complete Communities Urban Structure Map, the subject property falls within a portion of the land designated as Major Redevelopment Site "A" (Palliser). Major Redevelopment Sties are areas that will, "provide transformative opportunities for the development of Complete

Communities with significant residential and employment densities and attractive urban design, capitalizing on vacant or underutilized sites within the existing urban fabric". Supporting Direction and Enabling Strategies include:

- Promote development of Major Redevelopment Sites with proactive and collaborative planning process.
    - Support rapid transit and high-frequency transit service by encouraging higher density residential and higher intensity commercial and mixed uses within the centre of the development.
    - Work with landowners and other stakeholders to establish local goals and objectives for each Major Redevelopment Site while taking into account its relationship to other Direction Strategies and elements of the urban structure.
- Capitalize on the proximity of Major Redevelopment Sites to rapid transit and high frequency transit.
- Major Redevelopment Sites will provide for complete communities with significant levels of mixed use, high density development, with strong urban design and attractive parks, places, and open spaces.
    - Provide a mix of employment, high-density housing, retail, and service uses within Major Redevelopment Sites in a way that compliments the needs of adjacent communities.
    - Promote the use of minimum density standards for new development.
    - Promote high-quality plazas, parks, and streetscapes as focal points and networks that are connected to the greater community.
    - Incorporate pedestrian elements like street trees, street furniture, wide sidewalks, bicycle parking, and public art in new development.
    - Encourage the transition of development towards the outer edges of Major Redevelopment Sites that is sensitive to the scale, massing, height, form, and character of the surrounding area.
    - Mitigate any negative impacts new development may have on neighbouring streets, parks, and properties.
    - Support a range of different types, tenures, and unit sizes in housing opportunities.

- The subject property also falls within land that is designated "General Manufacturing" in the Employment Lands section of Complete Communities. It envisions the transformation of Employment Lands from segregated, industrial areas into, "aesthetically pleasing, sustainable, mixed-use developments", facilitated by significant advancements in technology that have made the majority of current industrial uses much cleaner, quieter, and greener than they were in the past. Supporting Direction and Enabling Strategies include:
    - Ensure that employment areas are well-planned, sustainable over the long term, and fit the community context.
        - Plans for the development of new employment areas will be established through a comprehensive planning process.
        - Streets that provide direct connections to primary transit services should provide facilities and amenities for pedestrians, cyclists, and transit, or provide offstreet alternatives.
        - Development or redevelopment of employment sites should provide for good walking environments within the site and adjacent to public sidewalks and transit stops.
        - Provide street trees, landscaping, fencing, and architectural elements for sites that are highly visible to the public from perimeter roads in cases where employment lands interface with other types of land uses, including public rights of way.

- Page 93 of Complete Communities describes the differences between the various types of Employment Lands. While Business Park and Institutional Campus employment lands allow for residential development in, at minimum, a moderate level of mixed use, General Manufacturing lands do not. However, page 10 outlines the hierarchy of the Complete Communities urban structure that provide for clarification where policies may conflict. In this case, the policies of Major Redevelopment Sites that encourage residential mixed use development take precedence over the General Manufacturing Employment Land policies that do not.
- The development of Major Redevelopment Sites requires a comprehensive planning process. The development at Fort Rouge Yards, with a master plan and zoning PDO, is an example of this. However, despite the proposed development falling within the boundaries of a Major Redevelopment Site, it is not required in this case because the subject property is relatively small compared to the rest of the Major Redevelopment Site, and the proposed development is occurring on a property that is already developed with a complimentary land use.
    - By designating the Palliser furniture site as a Major Redevelopment Site, it is the City's intent that an application for the rest of the larger property towards land uses envisioned by Complete Communities will trigger the comprehensive process.

Zoning

- The Manufacturing Light (M1) district is intended to provide for light manufacturing, processing, service, storage, wholesale, and distribution operations with all operations contained within an enclosed building with some limited outside storage.
- The Residential Mixed Use (RMU) district is intended to facilitate the development of primarily medium- to higher-density residential development, though it also may contain limited small-scale commercial, institutional, recreational, and service facilities needed to support residential development. The area, site, or building should retain a predominantly residential character. Development in the RMU district should facilitate and encourage pedestrian travel between residential and nonresidential uses. This district is often adjacent and incidental to a town centre, neighbourhood commercial centre, or other type of mixed use or major employment centre.

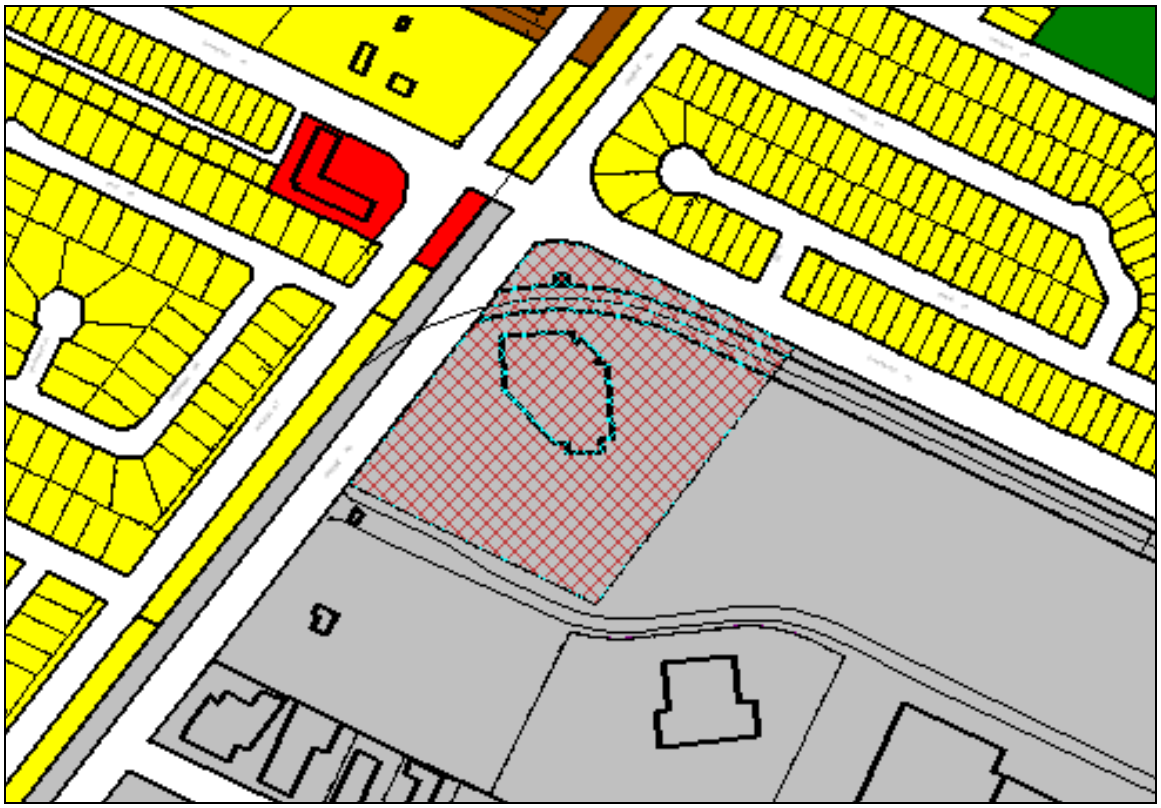

Figure 2: Zoning map of subject property and surrounding neighbourhood

- Section 62 of Zoning By-law No. 200/06 prescribes all permitted and conditional principal uses in each zoning district.

Permitted	Conditional
Dwelling, multi-family	Dwelling, live-work*
Dwelling, single-family detached	Dormitory
Dwelling, two-family	Neighbourhood rehabilitation home*
Assisted living facility	College or university
Care home*	Commercial school
Single room occupancy*	Elementary or jr high school*
Community/recreation centre	Senior high school*
Library	Boat dock, public access
Post office/carrier depot	Place of worship*
Protection and emergency services	Cultural centre
Community gardens	Drinking establishment
Park/plaza/square/playground*	Transit station
Day care centre*	
Gallery/museum*	
Restaurant*	
Office*	
Personal services*	
Medical/dental/optical/counseling clinic*	
Retail sales*	
Utility facility, minor*	

* - Subject to use-specific standards

Figure 3: Permitted and conditional uses in the "RMU" district

- Section 143 of the zoning by-law prescribes dimensional standards for the "RMU" district.

	Min. Lot Area (sq. ft.)	Min. Lot Area Per Dwelling Unit (sq. ft.)	Min. Front Yard (ft.)	Min. Rear Yard (ft.)	Min. Interior Side Yard (ft.)	Min. Corner Side Yard (ft.)	Principal Building Separation (ft.) **	Max. Building Height (ft.)
RMU	9,000	500	20	25	5*	20	8	100

* - In the RMU zoning district, where a building is more than one storey in height, the required interior side yard increases by 2 feet for each storey above the ground floor to a maximum of 20 feet.
** - For buildings taller than 35 feet, the principal building separation distance must be 50% of the height of the taller building to a maximum of 25 feet.

Figure 4: Dimensional standards for the "RMU" district

- Section 161 of the zoning by-law prescribes minimum parking standards for different land uses. Multi-family dwellings require 1.5 parking spaces per dwelling unit, where 10% must be unassigned guest parking.

Site servicing requirements

- As per comments received by the Land Development Branch, the site was serviced and paid for under the previous development agreement AG 222/96.
- However, Public Works has requested that the applicant construct a sidewalk along the south side of Springfield Rd from Gateway to the east property line given the increase in residents this development will create.
- At the original public hearing on November 15, the Administration was instructed to investigate the possibility of closing the two approaches accessing Gateway Rd and moving them to Lexington Park if access can be obtained. This can be accommodated, and is captured in Section 2.A.vi of this report's recommendations. It is recommended that the existing approaches be closed when an approach off Lexington Park can be obtained. Further, the developer should be responsible for restoring the boulevard following their removal.

Land dedication

- As a condition of rezoning or subdivision, a developer is required to contribute a portion of the land to be developed to the City for parks purposes; in this case, the City is requesting cash-in-lieu for this application.

Site design issues

- The Urban Planning Division is recommending that final site and building plans be approved by both the East Kildonan-Transcona Community Committee and the Director of Planning, Property,

and Development prior to the issuance of final building permits. The final design should address the following considerations:

- Well-designed, safe, and universally accessible pedestrian pathways providing routes connecting the proposed development to the church, the parking areas, and Gateway Rd and the adjacent AT pathway. They should also contemplate future connections with the rest of the Palliser furniture site. These pedestrian pathways should be raised and/or delineated with a distinct pavement texture, such as stamped concrete or the use of paving stones along the edges of the sidewalk. They should also be defined with landscaping.
- There is currently no landscaping interior to the existing parking lot; this should be enhanced.
- Provide additional landscaping in the landscaped area abutting the Springfield Rd frontage.
- The overall building design should be made up of a distinctive, quality, architectural character and style that avoids monotonous and featureless building massing and design. Blank walls should be minimized – landscaping, aesthetic characters (such as projections and offsets), change in cladding material, glass, etc. can be used to break up tracts of continuous blank walls.
- An area of common open space should be provided as a focal point for community interaction and/or recreation. It should be purposefully integrated into the overall design of the development and not merely residual areas left over after the buildings and parking lot are sited. Common open space can include gardens, courtyards, recreation, or play areas and may include some of the following features:
    - Seasonal planting areas
    - Large, flowering trees
    - Seating areas
    - Pedestrian-scaled lighting
    - On-site community recreation amenities
- Refuse storage areas and other building services should be located internal to the building or screened from view with appropriate fencing/landscaping.
- Any proposed fencing should be composed of high quality materials and design.

Compatibility with the surrounding neighbourhood

- The policies in Complete Communities pertaining to Major Redevelopment Sites provide very strong language in support of this application by encouraging high density residential and mixed use development. The designation of the Palliser furniture site as a Major Redevelopment Site did acknowledge its proximity to single family residential dwellings; therefore, Council has recognized that high density residential development can be compatible with single family homes.
- That being said, compatibility must be evaluated on a finer scale than a city-wide urban structure map. Produced in 2008, the City of Winnipeg developed infill development guidelines to help inform the design of multi-family developments in low-density neighbourhoods. One of the most useful tools in this document helps determine appropriate setbacks.
    - Section 2.2.2 says that where the proposed building is taller than the maximum allowable height for the adjacent, existing zoning district, achieve an appropriate side yard setback to adjacent residential property by setting the building back so that it does not project into a 45° angular plane measured from the adjacent residential property line (starting at a six foot height above grade) to the top of the proposed infill building. This is illustrated in Figure 5 below.

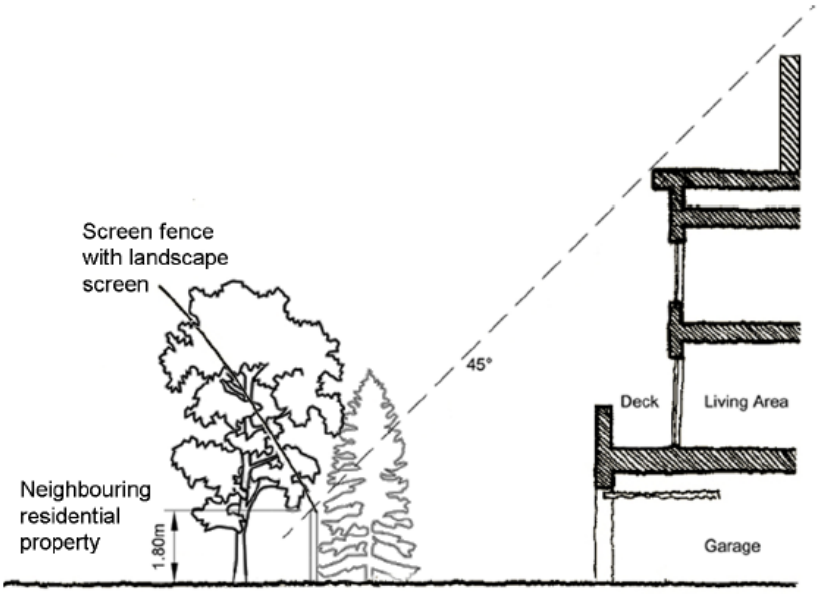

2.2.2 (ii) Achieve an appropriate rear yard setback to adjacent residential properties by setting the building back so it does not project into a 45º angular plane measured from the adjacent residential property line (starting at a six foot height above grade) to the top of the proposed infill building.

Figure 5: A tool promoted by the City of Winnipeg Infill Design Guidelines for Multiple Family Developments in Low Density Neighbourhoods

- With the northernmost building wall of the proposed development 232 ft. (152 ft. from the north property line and approximately 80 ft. of Springfield right-of-way) from the rear fence of the single family dwellings across Springfield, the proposed 112 ft. tall building easily achieves this 45° angular plane requirement, thereby suggesting that the applicant is proposing an appropriate balance of building height and setback.
- In relation to traffic, the Infill Design Guidelines emphasize the need to locate development along streets with sufficient capacity to accommodate anticipated traffic generated by the development. The proposed development has direct access to Gateway Rd and Raleigh St, and is also is close proximity to the Chief Peguis Trail. Of note is that the Transportation Division of the Public Works Department has reviewed this proposal and did not express any objections.
- The site also has good access to Transit, with routes such as the 11, 44, 85, and 90 in close proximity, and with the potential to improve significantly in the future when the rest of the Palliser furniture site develops according to the vision of Complete Communities. It is also directly adjacent to the AT corridor running between Gateway and Raleigh.
- One of the main tenets of Complete Communities is the provision of wide range of housing types and tenures in all neighbourhoods of the City. The proposed development promotes this principle by providing a multi-family residential typology of which there is not a significant amount in the surrounding neighbourhood.

RECOMMENDATION

The subject property falls within the boundaries of a Major Redevelopment Site in the Complete Communities Direction Strategy, whose policies strongly encourage higher density residential and mixed use development. Further, its compatibility is affirmed using the City of Winnipeg's Infill Design Guidelines for Multiple Family Development in Low Density Neighbourhoods, which looks at height-based setbacks and access to adequate transportation infrastructure.

As part of this rezoning, the existing zoning agreement as per DAZ 222/96 will need to be discharged, as it currently prohibits residential development as well as approaches off Springfield Rd (Public Works has indicated it has no concerns with the removal of this restriction). That being said, since it is being removed, it is necessary to evaluate what conditions should be carried over into the new agreement. It is recommended that existing conditions related to landscaped yards along Gateway and Springfield be retained, as well as restrictions on signage. It is also recommended that all future development on the site comply with the 45 degree angular plane restriction as suggested in the Infill Design Guidelines.

Finally, plan approval is also recommended to ensure the provision of pedestrian pathways, interior parking lot landscaping, additional landscaping along the Gateway frontage, an articulate building design, and other considerations.

This Report Submitted by: Michael Pyl
Planning, Property and Development Department
Planning and Land Use Division
Report Prepared by: PPD File # DAZ 224/2011

APPENDIX 'B'

Schedule "A" for File No. DAZ 224/11, East Kildonan-Transcona Community Committee, dated November 8, 2011.

By-Law No. _____

File No. **DAZ 224/11**

Atlas Sheet No. **V30**

N

EAST KILDONAN TRANSCONA COMMUNITY

Explanation

A proposed zoning change to By-law No. 200/2006 by rezoning the land located at 1315 Gateway Road from an "M1" MANUFACTURING LIGHT DISTRICT to an "RMU" RESIDENTIAL MIXED USE DISTRICT to facilitate the construction on a multiple family dwelling (180 units) on an existing church site as shown outlined below.

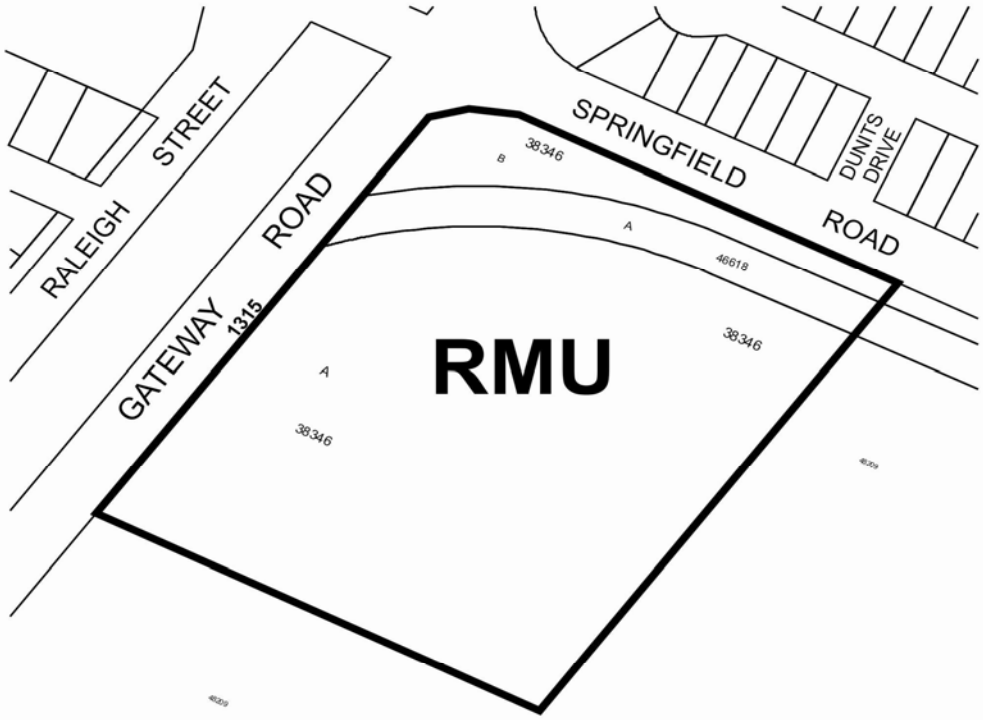

THIRD READING : _____ EFFECTIVE DATE : _____

ZONING AGREEMENT : YES ☐ NO ☐ CAVEAT No. _____

Exhibit "7" referred to in File DAZ 224/2011

ADMINISTRATIVE REPORT

Title: DAZ 224/2011 – 1315 Gateway Rd

Issue: For consideration at the public hearing to rezone to accommodate an 11 storey apartment building

Critical Path: East Kildonan-Transcona Community Committee → Standing Policy Committee on Property and Development → Executive Policy Committee → Council

AUTHORIZATION

Author	Department Head	CFO	CAO
P. Regan	n/a	n/a	

RECOMMENDATIONS

1. That the Developer be required to enter into a Servicing Agreement with the City containing the following condition:

   A. The developer shall, at no expense to the City, construct a 1.5m in width by 100 mm in thickness portland cement concrete sidewalk and boulevard landscaping along the south side of Springfield Road from Gateway to the end of their property as determined by and to the satisfaction of the Director of Public Works.

2. That The Winnipeg Zoning By-law No. 200/06 be amended by rezoning the subject land as shown on Schedule "A" for File DAZ 224/2011 dated November 8, 2011, to a "RMU" Residential Mixed Use District subject to the following:

   A. That the applicant enter into a zoning agreement with the City of Winnipeg pursuant to Subsection 240(1) of The City of Winnipeg Charter to provide for the following:

      i. That all development shall be fully contained within an upward line drawn at a 45 degree angle northward beginning at a point 6 feet above the northern boundary of the Springfield Road right-of-way and rising toward the proposed building.

      ii. That, for the development of any building or structure, plans shall be submitted showing the location and design of proposed buildings, the location and design of accessory parking areas, garbage enclosures, fencing, landscaping and signage to the Director of Planning, Property and Development and the Riel Community Committee for plan approval prior to the issuance of any building or development permit, and thereafter all to be maintained to the satisfaction of the Director of Planning, Property and Development.

iii. That, flashing, animated, or scintillating signs, rotating signs or beacons and electronic message boards shall not be permitted.

iv. That, advertising signs, mobile signs, or A-board signs shall not be permitted on the land.

v. That all lands lying north of the C.P.R. right-of-way along Springfield Road shall be established and maintained as a landscaped area, and no other uses excepting one (1) free standing sign to a maximum height of 6.096 metres (20 feet) and accessory to a church use shall be permitted on the land.

vi. That with the exception of any approved private approaches, a minimum 3.048 metre (10 feet) in depth landscaped yard shall be established and maintained by the Owner along the full length of the Gateway Road frontage.

3. That Caveat 2229705 be withdrawn as it affects Parcel "A", Plan 46618, and Parcels "A" and "B", Plan 38346.

4. That a ten percent (10%) dedication be made by a payment of a sum of money to the City in lieu of the requirement for land dedication based on the increase in market value of the land.

5. That in the event the application is not proceeded with expeditiously and the by-law is not enacted within twenty-four (24) months after adoption of the report by Council, the matter shall be deemed to be concluded and shall not be proceeded with unless an extension of time is applied for prior to the expiry of this twenty-four (24) month period and the extension is subsequently approved by Council.

6. That the Director of Legal Services and City Solicitor be requested to prepare the necessary rezoning by-law and forward same to Council for all three (3) readings.

7. That the zoning section of the by-law comes into force when the Zoning Agreement is registered in the Winnipeg Land Titles Office by caveat against the subject lands, provided that the said effective date occurs within one year from the date by-law is passed.

8. That the Proper Officers of the City are hereby authorized to execute said Zoning Agreement.

9. That the Director of Legal Services and City Solicitor be requested to do all things necessary for implementation in accordance with the terms of The City of Winnipeg Charter.

REASON FOR THE REPORT

- The property owner, North Kildonan Mennonite Brethren Church, intends to develop an 11 storey, 180-unit multifamily dwelling along the east edge of the subject property. This dwelling will be marketed to 55+ adults.
- The subject property is designated as a Major Redevelopment Site in OurWinnipeg and the Complete Communities Direction Strategy.

IMPLICATIONS OF THE RECOMMENDATIONS

If the recommendations of the Planning and Land Use Division are concurred in, the subject property will be rezoned.

CONSULTATION

In preparing this report there was consultation with:

N/A

SUBMITTED BY

Department	Planning, Property and Development
Division	Planning and Land Use
Prepared by	Michael Pyl
Date:	November 8, 2011
File No.	DAZ 224/11

APPENDIX 'A'

DATE: November 8, 2011
FILE: DAZ 224/2011
RELATED FILES: DAV 11-164349/D
COMMUNITY: East Kildonan-Transcona
NEIGHBOURHOOD #: 4.420

SUBJECT: To rezone the subject property from "M1" Manufacturing Light district to "RMU" Residential Mixed Use district.

LOCATION: 1315 Gateway Rd

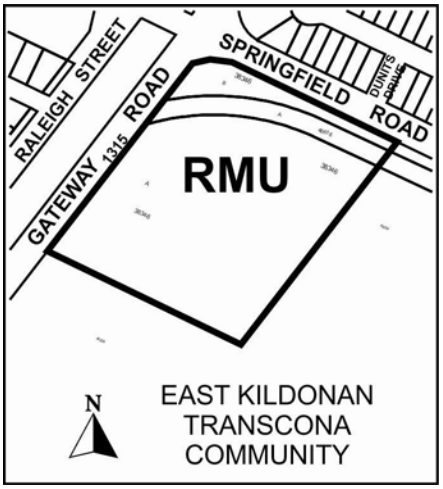

APPLICANT: Raymond S.C. Wan Architect
1250 Waverley St Unit 1
Winnipeg, MB R3T 6C6

OWNER: The Mennonite Brethren Church of Manitoba
1315 Gateway Rd
Winnipeg, MB R2G 1G5

RECOMMENDATION: Approval

REPORT SUMMARY

- The property owner, North Kildonan Mennonite Brethren Church, intends to develop an 11 storey, 180-unit multifamily dwelling along the east edge of the subject property. This dwelling will be marketed to 55+ adults.
- The subject property is designated as a Major Redevelopment Site in OurWinnipeg and the Complete Communities Direction Strategy.

SITE DESCRIPTION

- The subject property is located at the southeast corner of Gateway Rd and Springfield Rd in the Springfield South neighbourhood of the North Kildonan ward.
- The subject property is 8.5 acres, with approximately 600 ft. of frontage along Gateway and 480 ft. of frontage along Springfield. It is currently occupied by the North Kildonan Mennonite Brethren Church towards the northwest corner of the site.
- Adjacent properties include the Palliser Furniture warehouse to the south and east (and surrounding lands which are otherwise undeveloped) zoned “M1” Manufacturing Light district, single family dwellings to the north across Springfield zoned “R1-M” Residential Single Family district, and single family dwellings to the west across Gateway and Raleigh St zoned “R1-L”.



Figure 1: Site map of subject property and surrounding neighbourhood

DESCRIPTION OF THE PROPOSED DEVELOPMENT

- The property owner, North Kildonan Mennonite Brethren Church, intends to develop an 11 storey, 180-unit multifamily dwelling along the east edge of the subject property. This dwelling will be marketed to 55+ adults.
- The northernmost wall of the building will be set back 152 ft. from the north property line along Springfield and 25 ft. from the east property line.
- In total, there will be 528 parking stalls provided on the subject property. With 150 spaces allocated to the church assembly area and 184 spaces to the banquet hall, there will be 193 spaces allocated to the apartment building.

- Detailed elevations and site plans have not been provided at the time of application.

BACKGROUND

DAZ 211/89

- On July 12, 1989, Council rezoned the subject property, as well as other land extending as far east as the transmission line corridor, from an “M2” Industrial district to an “RM-1” Multiple-Family district and a “C2” General Commercial district to allow for a planned commercial and residential development.
- As a condition of approval, a zoning agreement was placed on the property. It required that:
    - On the “RM-1” land, there shall be no more than 230 dwelling units, and multiple-family dwellings shall not exceed seven storeys in height.
    - On the “C2” land, no multiple-family dwellings shall exceed seven storeys in height, no building for retail or service uses shall exceed 40 ft. in height, that the total gross leasable floor area for retail and service uses shall no exceed 160,000 sq. ft., that the maximum gross leasable floor area at ground or main level of any building shall not exceed 100,000 sq. ft., and the gross leasable floor area above the ground or main level of a building or buildings shall be used only for “offices”.
    - Plan approval for building location and design, exterior materials and elevations, accessory parking and loading areas, landscaping and fencing, points of egress, signs, and garbage enclosures to the East Kildonan-Transcona Community Committee and the Director of Planning, Property, and Development.
- This application was heard in concurrence with a Plan Winnipeg Amendment to designate the lands from “Industrial” policy area to a “Suburban Residential Neighbourhood” policy area. Council gave third reading to this by-law on January 4, 1989.
- When Council passed this rezoning as By-law No. 5441/90, it contained a provision that it would not come into force and effect until the zoning agreement was registered. This zoning agreement was never registered. As a result, this by-law was repealed by Council in February, 2002.

DAZ 222/96

- In 1997, Council rezoned the subject property, as well as other land extending as far east as the transmission line corridor, from “M2” Industrial district to “M1-B” Industrial district.
- The property was divided into Site #1 and Site #2. Site #1, comprising the current subject property, was intended to accommodate either a commercial retail/service shopping centre or industrial type development, and that prior to being developed, would be developed as a recreation centre consisting of outdoor sports fields. Site #2 was intended to accommodate up to six industrial buildings to facilitate the expansion of Palliser Furniture’s manufacturing and assembly capabilities.
- As a condition of approval, a zoning agreement was placed on the property. It prescribes that:
    - Permitted and conditional uses on both Sites #1 and #2. Of note is that these uses do not currently allow residential development.
    - A maximum building height on Site #1 of 30 ft.
    - A minimum 10 ft. landscaped yard along the full length of the Gateway Rd frontage of Site #1.
    - All lands north of the CPR right-of-way along Springfield Rd shall be established and maintained as a landscaped area only, and no other uses (including signs) shall be permitted on the land.
    - No private approach or vehicular access onto or from Springfield Rd shall be permitted.

- All free-standing signs shall be limited to a maximum of 25 ft. in height.
- Billboards, mobile signs, mobile poster signs, A-Frames, or similar temporary signs shall not be permitted.
- Plan approval for buildings, signs, fences, private approaches, parking, loading areas, and landscaped areas to the East Kildonan-Transcona Community Committee and the Director of Planning, Property, and Development.

- This application was heard in concurrence with a Plan Winnipeg Amendment to re-designate the lands from "Neighbourhood" policy area to "Industrial" area. Council gave third reading to this by-law on March 26, 1997, and came into effect when the zoning agreement for DAZ 222/96 was registered at the Winnipeg Land Titles Office.

ZAA 11/99

- On November 17, 1999, Council approved an amendment to the DAZ 222/96 zoning agreement to allow for a 45 ft. tall church with a 70 ft. tall clock tower where all development was originally limited to a height of 30 ft.
- The zoning agreement amendment also allowed for one 20 ft. free-standing sign accessory to a church in the lands north of the CPR right-of-way along Springfield, where it was previously restricted.
- This ZAA was heard in concurrence with a variance (DAV 421/99D) to permit the construction of the church with no south side yard to the accessory parking area instead of 15 ft. This was approved subject to two conditions:
    - That the applicant shall provide interior parking lot landscaping (in addition to the landscaping in the Gateway Rd frontage required as per DAZ 222/96), subject to plans approved by the East Kildonan-Transcona Community Committee.
    - Two years to establish.

DCU 163/01C

- In 2001, the Board of Adjustment approved a conditional use to permit the establishment of a day care centre in the existing church.

DAV 11-164349D

- In concurrence with this application, the applicant has also applied for a variance to permit:
    - A height of 112 ft. instead of 100 ft.
    - 193 parking spaces instead of 270 spaces.

ANALYSIS AND ISSUES

OurWinnipeg and Complete Communities Direction Strategy

- The Complete Communities Direction Strategy is one of four direction strategies supporting OurWinnipeg, the city's new long-range development plan, and is intended to gain statutory authority as a secondary plan. The strategy is intended to serve as a "playbook" to guide land use and development in Winnipeg. It received third reading at City Council on July 20, 2011, and became effective on August 17, 2011.
- According to the Complete Communities Urban Structure Map, the subject property falls within a portion of the land designated as Major Redevelopment Site "A" (Palliser). Major Redevelopment Sties are areas that will, "provide transformative opportunities for the development of Complete

Communities with significant residential and employment densities and attractive urban design, capitalizing on vacant or underutilized sites within the existing urban fabric". Supporting Direction and Enabling Strategies include:

- Promote development of Major Redevelopment Sites with proactive and collaborative planning process.
    - Support rapid transit and high-frequency transit service by encouraging higher density residential and higher intensity commercial and mixed uses within the centre of the development.
    - Work with landowners and other stakeholders to establish local goals and objectives for each Major Redevelopment Site while taking into account its relationship to other Direction Strategies and elements of the urban structure.
- Capitalize on the proximity of Major Redevelopment Sites to rapid transit and high frequency transit.
- Major Redevelopment Sites will provide for complete communities with significant levels of mixed use, high density development, with strong urban design and attractive parks, places, and open spaces.
    - Provide a mix of employment, high-density housing, retail, and service uses within Major Redevelopment Sites in a way that compliments the needs of adjacent communities.
    - Promote the use of minimum density standards for new development.
    - Promote high-quality plazas, parks, and streetscapes as focal points and networks that are connected to the greater community.
    - Incorporate pedestrian elements like street trees, street furniture, wide sidewalks, bicycle parking, and public art in new development.
    - Encourage the transition of development towards the outer edges of Major Redevelopment Sites that is sensitive to the scale, massing, height, form, and character of the surrounding area.
    - Mitigate any negative impacts new development may have on neighbouring streets, parks, and properties.
    - Support a range of different types, tenures, and unit sizes in housing opportunities.

- The subject property also falls within land that is designated "General Manufacturing" in the Employment Lands section of Complete Communities. It envisions the transformation of Employment Lands from segregated, industrial areas into, "aesthetically pleasing, sustainable, mixed-use developments", facilitated by significant advancements in technology that have made the majority of current industrial uses much cleaner, quieter, and greener than they were in the past. Supporting Direction and Enabling Strategies include:
    - Ensure that employment areas are well-planned, sustainable over the long term, and fit the community context.
        - Plans for the development of new employment areas will be established through a comprehensive planning process.
        - Streets that provide direct connections to primary transit services should provide facilities and amenities for pedestrians, cyclists, and transit, or provide offstreet alternatives.
        - Development or redevelopment of employment sites should provide for good walking environments within the site and adjacent to public sidewalks and transit stops.
        - Provide street trees, landscaping, fencing, and architectural elements for sites that are highly visible to the public from perimeter roads in cases where employment lands interface with other types of land uses, including public rights of way.

- Page 93 of Complete Communities describes the differences between the various types of Employment Lands. While Business Park and Institutional Campus employment lands allow for residential development in, at minimum, a moderate level of mixed use, General Manufacturing lands do not. However, page 10 outlines the hierarchy of the Complete Communities urban structure that provide for clarification where policies may conflict. In this case, the policies of Major Redevelopment Sites that encourage residential mixed use development take precedence over the General Manufacturing Employment Land policies that do not.
- The development of Major Redevelopment Sites requires a comprehensive planning process. The development at Fort Rouge Yards, with a master plan and zoning PDO, is an example of this. However, despite the proposed development falling within the boundaries of a Major Redevelopment Site, it is not required in this case because the subject property is relatively small compared to the rest of the Major Redevelopment Site, and the proposed development is occurring on a property that is already developed with a complimentary land use.
    - By designating the Palliser furniture site as a Major Redevelopment Site, it is the City's intent that an application for the rest of the larger property towards land uses envisioned by Complete Communities will trigger the comprehensive process.

Zoning

- The Manufacturing Light (M1) district is intended to provide for light manufacturing, processing, service, storage, wholesale, and distribution operations with all operations contained within an enclosed building with some limited outside storage.
- The Residential Mixed Use (RMU) district is intended to facilitate the development of primarily medium- to higher-density residential development, though it also may contain limited small-scale commercial, institutional, recreational, and service facilities needed to support residential development. The area, site, or building should retain a predominantly residential character. Development in the RMU district should facilitate and encourage pedestrian travel between residential and nonresidential uses. This district is often adjacent and incidental to a town centre, neighbourhood commercial centre, or other type of mixed use or major employment centre.

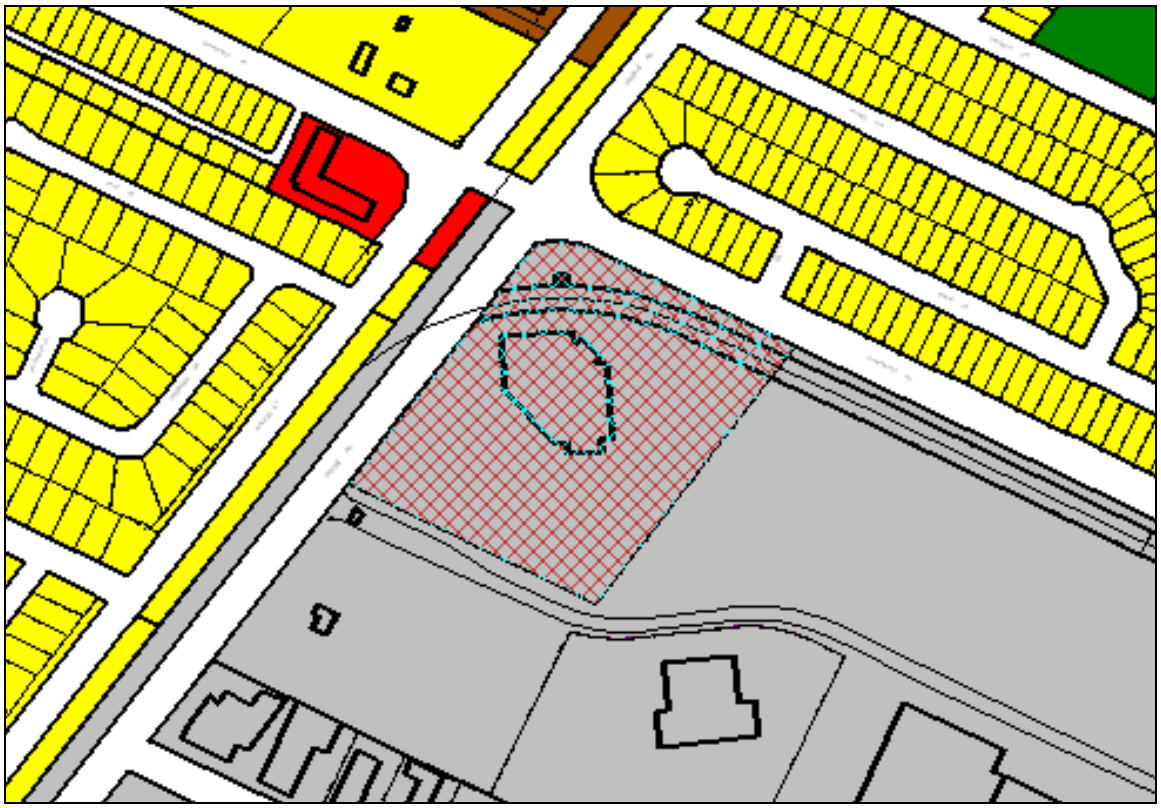

Figure 2: Zoning map of subject property and surrounding neighbourhood

- Section 62 of Zoning By-law No. 200/06 prescribes all permitted and conditional principal uses in each zoning district.

Permitted	Conditional
Dwelling, multi-family	Dwelling, live-work*
Dwelling, single-family detached	Dormitory
Dwelling, two-family	Neighbourhood rehabilitation home*
Assisted living facility	College or university
Care home*	Commercial school
Single room occupancy*	Elementary or jr high school*
Community/recreation centre	Senior high school*
Library	Boat dock, public access
Post office/carrier depot	Place of worship*
Protection and emergency services	Cultural centre
Community gardens	Drinking establishment
Park/plaza/square/playground*	Transit station
Day care centre*	
Gallery/museum*	
Restaurant*	
Office*	
Personal services*	
Medical/dental/optical/counseling clinic*	
Retail sales*	
Utility facility, minor*	

* - Subject to use-specific standards

Figure 3: Permitted and conditional uses in the "RMU" district

- Section 143 of the zoning by-law prescribes dimensional standards for the "RMU" district.

	Min. Lot Area (sq. ft.)	Min. Lot Area Per Dwelling Unit (sq. ft.)	Min. Front Yard (ft.)	Min. Rear Yard (ft.)	Min. Interior Side Yard (ft.)	Min. Corner Side Yard (ft.)	Principal Building Separation (ft.) **	Max. Building Height (ft.)
RMU	9,000	500	20	25	5*	20	8	100

* - In the RMU zoning district, where a building is more than one storey in height, the required interior side yard increases by 2 feet for each storey above the ground floor to a maximum of 20 feet.
** - For buildings taller than 35 feet, the principal building separation distance must be 50% of the height of the taller building to a maximum of 25 feet.

Figure 4: Dimensional standards for the "RMU" district

- Section 161 of the zoning by-law prescribes minimum parking standards for different land uses. Multi-family dwellings require 1.5 parking spaces per dwelling unit, where 10% must be unassigned guest parking.

Site servicing requirements

- As per comments received by the Land Development Branch, the site was serviced and paid for under the previous development agreement AG 222/96.
- However, Public Works has requested that the applicant construct a sidewalk along the south side of Springfield Rd from Gateway to the east property line given the increase in residents this development will create.

Land dedication

- As a condition of rezoning or subdivision, a developer is required to contribute a portion of the land to be developed to the City for parks purposes; in this case, the City is requesting cash-in-lieu for this application.

Site design issues

- The Urban Planning Division is recommending that final site and building plans be approved by both the East Kildonan-Transcona Community Committee and the Director of Planning, Property, and Development prior to the issuance of final building permits. The final design should address the following considerations:
    - Well-designed, safe, and universally accessible pedestrian pathways providing routes connecting the proposed development to the church, the parking areas, and Gateway Rd and the adjacent AT pathway. They should also contemplate future connections with the rest of the Palliser furniture site. These pedestrian pathways should be raised and/or delineated with a distinct pavement texture, such as stamped concrete or the use of

paving stones along the edges of the sidewalk. They should also be defined with landscaping.

- There is currently no landscaping interior to the existing parking lot; this should be enhanced.
- Provide additional landscaping in the landscaped area abutting the Springfield Rd frontage.
- The overall building design should be made up of a distinctive, quality, architectural character and style that avoids monotonous and featureless building massing and design. Blank walls should be minimized – landscaping, aesthetic characters (such as projections and offsets), change in cladding material, glass, etc. can be used to break up tracts of continuous blank walls.
- An area of common open space should be provided as a focal point for community interaction and/or recreation. It should be purposefully integrated into the overall design of the development and not merely residual areas left over after the buildings and parking lot are sited. Common open space can include gardens, courtyards, recreation, or play areas and may include some of the following features:
    - Seasonal planting areas
    - Large, flowering trees
    - Seating areas
    - Pedestrian-scaled lighting
    - On-site community recreation amenities
- Refuse storage areas and other building services should be located internal to the building or screened from view with appropriate fencing/landscaping.
- Any proposed fencing should be composed of high quality materials and design.

Compatibility with the surrounding neighbourhood

- The policies in Complete Communities pertaining to Major Redevelopment Sites provide very strong language in support of this application by encouraging high density residential and mixed use development. The designation of the Palliser furniture site as a Major Redevelopment Site did acknowledge its proximity to single family residential dwellings; therefore, Council has recognized that high density residential development can be compatible with single family homes.
- That being said, compatibility must be evaluated on a finer scale than a city-wide urban structure map. Produced in 2008, the City of Winnipeg developed infill development guidelines to help inform the design of multi-family developments in low-density neighbourhoods. One of the most useful tools in this document helps determine appropriate setbacks.
    - Section 2.2.2 says that where the proposed building is taller than the maximum allowable height for the adjacent, existing zoning district, achieve an appropriate side yard setback to adjacent residential property by setting the building back so that it does not project into a 45° angular plane measured from the adjacent residential property line (starting at a six foot height above grade) to the top of the proposed infill building. This is illustrated in Figure 5 below.

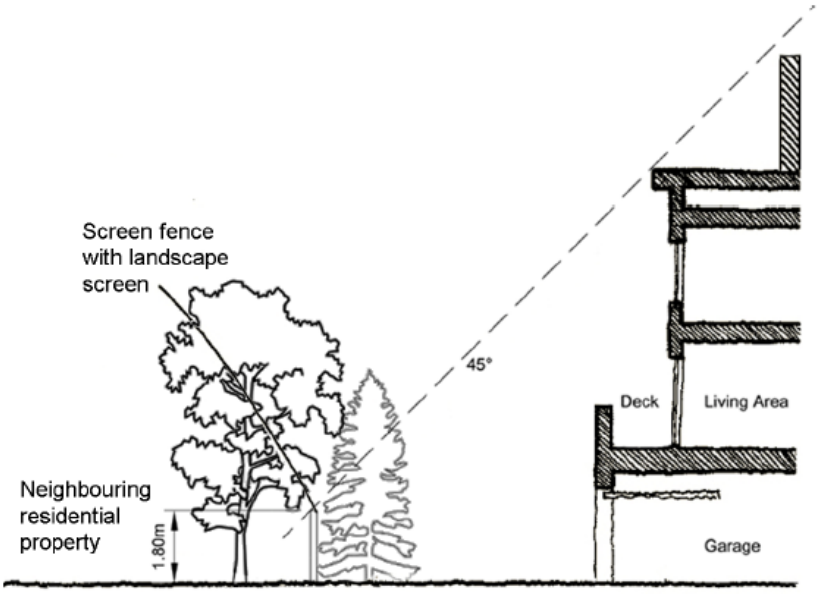

2.2.2 (ii) Achieve an appropriate rear yard setback to adjacent residential properties by setting the building back so it does not project into a 45º angular plane measured from the adjacent residential property line (starting at a six foot height above grade) to the top of the proposed infill building.

Figure 5: A tool promoted by the City of Winnipeg Infill Design Guidelines for Multiple Family Developments in Low Density Neighbourhoods

- With the northernmost building wall of the proposed development 232 ft. (152 ft. from the north property line and approximately 80 ft. of Springfield right-of-way) from the rear fence of the single family dwellings across Springfield, the proposed 112 ft. tall building easily achieves this 45° angular plane requirement, thereby suggesting that the applicant is proposing an appropriate balance of building height and setback.
- In relation to traffic, the Infill Design Guidelines emphasize the need to locate development along streets with sufficient capacity to accommodate anticipated traffic generated by the development. The proposed development has direct access to Gateway Rd and Raleigh St, and is also is close proximity to the Chief Peguis Trail. Of note is that the Transportation Division of the Public Works Department has reviewed this proposal and did not express any objections.
- The site also has good access to Transit, with routes such as the 11, 44, 85, and 90 in close proximity, and with the potential to improve significantly in the future when the rest of the Palliser furniture site develops according to the vision of Complete Communities. It is also directly adjacent to the AT corridor running between Gateway and Raleigh.
- One of the main tenets of Complete Communities is the provision of wide range of housing types and tenures in all neighbourhoods of the City. The proposed development promotes this principle by providing a multi-family residential typology of which there is not a significant amount in the surrounding neighbourhood.

RECOMMENDATION

The subject property falls within the boundaries of a Major Redevelopment Site in the Complete Communities Direction Strategy, whose policies strongly encourage higher density residential and mixed use development. Further, its compatibility is affirmed using the City of Winnipeg's Infill Design Guidelines for Multiple Family Development in Low Density Neighbourhoods, which looks at height-based setbacks and access to adequate transportation infrastructure.

As part of this rezoning, the existing zoning agreement as per DAZ 222/96 will need to be discharged, as it currently prohibits residential development as well as approaches off Springfield Rd (Public Works has indicated it has no concerns with the removal of this restriction). That being said, since it is being removed, it is necessary to evaluate what conditions should be carried over into the new agreement. It is recommended that existing conditions related to landscaped yards along Gateway and Springfield be retained, as well as restrictions on signage. It is also recommended that all future development on the site comply with the 45 degree angular plane restriction as suggested in the Infill Design Guidelines.

Finally, plan approval is also recommended to ensure the provision of pedestrian pathways, interior parking lot landscaping, additional landscaping along the Gateway frontage, an articulate building design, and other considerations.

This Report Submitted by: Michael Pyl
Planning, Property and Development Department
Planning and Land Use Division
Report Prepared by: PPD File # DAZ 224/2011

APPENDIX 'B'

Schedule "A" for File No. DAZ 224/11, East Kildonan-Transcona Community Committee, dated November 8, 2011.

