Minutes – Executive Policy Committee – May 16, 2012

Minute No. 255
Report – Standing Policy Committee on Property and Development – May 8, 2012

Item No. 3 Subdivision and Rezoning – Southwest Corner of McGillivray Boulevard and Dunkley Street (Charleswood - Tuxedo Ward) File DASZ 2/2012

EXECUTIVE POLICY COMMITTEE RECOMMENDATION:

The Executive Policy Committee concurred in the recommendations of the Standing Policy Committee on Property and Development and the Assiniboia Community Committee, as amended, and submits the following to Council:

1. That the plan of subdivision proposed under File DASZ 2/2012 be approved for preparation as a plan of subdivision by a Manitoba Land Surveyor in accordance with Schedule "A" for File DASZ 2/2012 dated April 3, 2012 with such minor changes as may be required, and registration in the Winnipeg Land Titles Office, subject to the following:

    A. That the Developer be required to enter into Development Agreement with the City satisfying all the conditions outlined in the report of the Administrative Coordinating Group dated March 30, 2012.

2. That the Winnipeg Zoning By-law No. 200/06 be amended by rezoning the subject land as shown on Schedule "A" for File DASZ 2/2012 dated April 3, 2012 to a "RMF-M" Residential Multi-Family district subject to the following:

    A. That the applicant enter into a Zoning Agreement with the City pursuant to Section 240(1) of the City of Winnipeg Charter to include the following conditions:

        i. That the building's height shall be fully contained within an upward line drawn at a 45 degree angle northward beginning at a point 6 feet above the shared property line of the subject site and the single family properties to the south, and rising toward the proposed building.

        ii. That for the development of any building or structure, plans shall be submitted showing the location and design of proposed buildings, the location and design of accessory parking areas, garbage enclosures, lighting, fencing and landscaping to the Assiniboia Community Committee and the Director of Planning, Property and Development for plan approval prior to the issuance of any building or development permit, and thereafter to be maintained to the satisfaction of the Director of Planning, Property and Development.

Report – Standing Policy Committee on Property and Development – May 8, 2012

3. That in lieu of the requirement for land dedication, a sum of money, calculated as ten percent (10%) of the increase in market value of the land and the creation of additional lots, be paid to the City for the purchase of land for purposes of the City other than streets.

4. That the Director of Planning, Property, and Development be authorized to certify any documents in connection therewith.

5. That in the event the matter is not proceeded with expeditiously and the by-law is not passed within two years after adoption of the report by Council, the matter shall be deemed to be concluded and shall not be proceeded with unless an extension of time is applied for prior to the expiry of the two-year period and Council approves the extension.

6. That the Director of Legal Services and City Solicitor be requested to prepare the necessary by-law in accordance with the above.

7. That the subdivision section of the by-law shall come into force and effect upon execution by the City of Winnipeg of the Development Agreement.

8. That the zoning section of the by-law shall come into force and effect when the plan of subdivision is registered in the Winnipeg Land Titles Office and the Zoning Agreement is registered in the Winnipeg Land Titles Office by caveat against the subject lands, provided that the said effective date occurs within one year from the date the by-law is passed.

9. That the plan of subdivision shall be approved and signed by the Director of Planning, Property, and Development within one year from the date the by-law is passed, failing which the matter shall be deemed to be concluded and shall not be proceeded with unless an extension of time is applied for prior to the expiry of the one-year period and Council approves the extension.

10. That the Director of Legal Services and City Solicitor be requested to do all things necessary for implementation in accordance with the terms of the City of Winnipeg Charter.

Report – Standing Policy Committee on Property and Development – May 8, 2012

DECISION MAKING HISTORY:

Moved by Councillor Browaty,

That the recommendations of the Standing Policy Committee on Property and Development and the Assiniboia Community Committee, as amended, be concurred in and forwarded to Council.

Carried

STANDING COMMITTEE RECOMMENDATION:

On May 8, 2012, the Standing Policy Committee on Property and Development concurred in the recommendation of the Assiniboia Community Committee, with the following amendment,

- Delete Recommendations 3. A. and renumber the remaining recommendations accordingly,

and submitted the matter to the Executive Policy Committee and Council.

COMMUNITY COMMITTEE RECOMMENDATION:

On April 10, 2012, the Assiniboia Community Committee concurred in the recommendation of the Winnipeg Public Service with the following amendments:

- Amend Recommendation 2.A.ii. by inserting the word "lighting," after the word "enclosures,"

- Add the following new Recommendation 3.A.:

  "3.A. That all monies collected in lieu of land dedication go towards a fund to be established to assist with the creation of a daycare facility next to the Whyte Ridge Elementary School,"

and forwarded the matter to the Standing Policy Committee on Property and Development.

RE: **Subdivision and Rezoning - Southwest Corner of McGillivray Boulevard and Dunkley Street**
File DASZ 2/2012

For submission to: **The Standing Policy Committee on Property and Development**

Prepared by: **Visa Hutter, Senior Committee Clerk**
Assiniboia Community Committee

Report date: **April 13, 2012**

COMMUNITY COMMITTEE RECOMMENDATION:

On April 10, 2012, the Assiniboia Community Committee concurred in the recommendation of the Winnipeg Public Service, as amended, and recommends to the Standing Policy Committee on Property and Development:

1. That the plan of subdivision proposed under File DASZ 2/2012 be approved for preparation as a plan of subdivision by a Manitoba Land Surveyor in accordance with Schedule "A" for File DASZ 2/2012 dated April 3, 2012 with such minor changes as may be required, and registration in the Winnipeg Land Titles Office, subject to the following:

    A. That the Developer be required to enter into Development Agreement with the City satisfying all the conditions outlined in the report of the Administrative Coordinating Group dated March 30, 2012.

2. That the Winnipeg Zoning By-law No. 200/06 be amended by rezoning the subject land as shown on Schedule "A" for File DASZ 2/2012 dated April 3, 2012 to a "RMF-M" Residential Multi-Family district subject to the following:

    A. That the applicant enter into a Zoning Agreement with the City pursuant to Section 240(1) of the City of Winnipeg Charter to include the following conditions:

        i. That the building's height shall be fully contained within an upward line drawn at a 45 degree angle northward beginning at a point 6 feet above the shared property line of the subject site and the single family properties to the south, and rising toward the proposed building.

        ii. That for the development of any building or structure, plans shall be submitted showing the location and design of proposed buildings, the location and design of accessory parking areas, garbage enclosures, ***lighting***, fencing and landscaping to the Assiniboia Community Committee and the Director of Planning, Property and Development for plan approval prior to the issuance of any building or development permit, and thereafter to be maintained to the satisfaction of the Director of Planning, Property and Development.

3. That in lieu of the requirement for land dedication, a sum of money, calculated as ten percent (10%) of the increase in market value of the land and the creation of additional lots, be paid to the City for the purchase of land for purposes of the City other than streets, subject to the following condition:

   A. That all monies collected in lieu of land dedication go towards a fund to be established to assist with the creation of a daycare facility next to the Whyte Ridge Elementary School.

4. That the Director of Planning, Property, and Development be authorized to certify any documents in connection therewith.

5. That in the event the matter is not proceeded with expeditiously and the by-law is not passed within two years after adoption of the report by Council, the matter shall be deemed to be concluded and shall not be proceeded with unless an extension of time is applied for prior to the expiry of the two-year period and Council approves the extension.

6. That the Director of Legal Services and City Solicitor be requested to prepare the necessary by-law in accordance with the above.

7. That the subdivision section of the by-law shall come into force and effect upon execution by the City of Winnipeg of the Development Agreement.

8. That the zoning section of the by-law shall come into force and effect when the plan of subdivision is registered in the Winnipeg Land Titles Office and the Zoning Agreement is registered in the Winnipeg Land Titles Office by caveat against the subject lands, provided that the said effective date occurs within one year from the date the by-law is passed.

9. That the plan of subdivision shall be approved and signed by the Director of Planning, Property, and Development within one year from the date the by-law is passed, failing which the matter shall be deemed to be concluded and shall not be proceeded with unless an extension of time is applied for prior to the expiry of the one-year period and Council approves the extension.

10. That the Director of Legal Services and City Solicitor be requested to do all things necessary for implementation in accordance with the terms of the City of Winnipeg Charter.

Note: The wording in bold and italics denotes amendments made by the Community Committee.

The Assiniboia Community Committee provided the following supporting reason(s) for its recommendation:

1. The Assiniboia Community Committee agreed with the administrative comments contained in the report of the Planning and Land Use Division dated April 3, 2012.

2. This is a good thing for our community, it will enhance the community.

PUBLIC HEARING SUMMARY

File:	DASZ 2/2012
Before:	Assiniboia Community Committee Councillor Havixbeck, Chairperson Councillor Fielding Councillor Nordman
Public Hearing:	April 10, 2012 Council Chamber Council Building, 510 Main Street
Applicant:	Pre-Con Builders (Robin Lee)

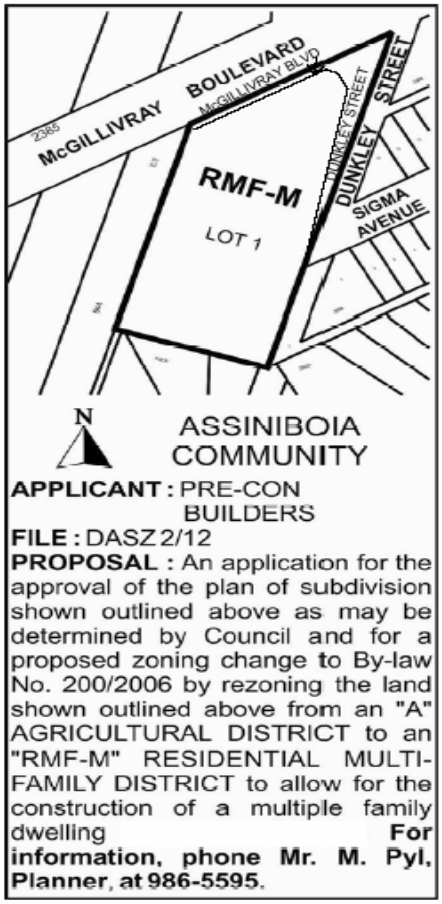

Premises Affected:	Southwest Corner of McGillivray Boulevard and Dunkley Street
Exhibits Filed:	1. Application dated March 15, 2012 2. Notification of Public Hearing dated March 16, 2012 3. Manitoba Status of Titles 1878470/71 and 1878472/1

4. Letter of authorization dated March 8, 2012 from Nova Empire Ltd. And Progressive Holdings Inc. to Towers Realty Group and Pre-Con Builders
5. Plans (9 pages)
6. Petition in opposition to the application purporting to contain the signatures of 1,023 area residents, submitted by Pat de Jong
7. Petition in opposition to the application purporting to contain the signatures of 580 area residents, submitted by Erin White
8. Communication dated April 5, 2012, from Valentina Cloutier in support of the application
9. Report from the Planning and Land Use Division dated April 3, 2012
10. Inspection Report
11. Communication dated April 8, 2012, from Carol Fraser in support of the application
12. Communication dated April 9, 2012, from Rhonda Lorch in support of the application
13. Presentation in support of the application submitted at the public hearing by Bryan Gray, Robin Lee, Matthew Narvey and James Thomas
14. Documentations (3) in opposition to the application submitted at the public hearing by Pat de Jong, Erin White and Adriatic Bukich
15. Petition in opposition to the application purporting to contain the signatures of 120 area residents, submitted by Erin White at the public hearing
16. Communication dated April 10, 2012, from Peter Tataryn in support of the application
17. Audio Recording of public hearing held on April 10, 2012

REPRESENTATIONS:

In Support:

Valentina Cloutier
Carol Fraser
Bryan Gray, Veritas North Public Affairs Ltd.
Robin Lee, Pre-Con Builders
Rhonda Lorch
Claudette Lupu
Matthew Narvey, Realty Towers
Mike Stairs
Peter Tataryn
James Thomas, Hilderman Thomas Frank Cram
Eric Vogan

In Opposition:

Jim Aberdeen
Blaine and Glenda Abram
Rajib Ahsan
Darlene and Terry Boettcher
Axel Buerkle
Adriatic Bukich
Michael Byfield
Grant Cairns
Carol and H. Fraser Cameron
Patrick Chau
Isaac Cohen
Cathy Collins
Deanne Coombs
Amanda Cotterill
Marie E. and Ivy Davy
Hank de Jong
Michael and Pat de Jong
Michael Dubowec
Karen Dupchak
Evelyn and Neil Fehr
Stephanie Giberson - Kirby
D. Grewal
Dave Hickling
Jeff Hiebert
Massimo Iafolla
Greg T. Jowett
Kalwant Kaur
Loveleen Kaur
Wayne King
David Kirby
Kevin and Megan Komarnicki
Beverley and Larry Kulbacki
Sing Lee
Judy Lee - Wing
Debbie and Larry Leiter
Sergio Levy
Qun Liu
Colin and Diane Livingston
Robert Lukas
Victoria Macdonald
Cherie MacEachern
James MacPherson
Paul Madziak
Rolando and Imelda Marasigan
Jen Marquardson
Tracy, Perry, Lucas and Hannah Marsh
Nunziata Masi
Kelsey and Scott McDonald
Aaron McKelvie
C. Stuart and Susan McKelvie
Felix and Lileena Mendis
Dennis Neufeld
Leanne and Mark Newman
Colin Nichols
Lorna and Godofredo Onio
Vajira Pathirana
Carmela and Frank Pelletier
David Penner
Pamela and Jean Piché
Randy Ptosnick
Jason Rauhaus
Kevin Rattan
Louise Reilly
Andrew M. and Joanne Robertson
Napoleon Sansregret
Antonio P. Santos
Erica Schmidt
Jennifer Servant
Gurminder Singh
Marchand Singh
Saranjit Surjan Singh
Sarbjeet Singh
Dave Song
Matthew Stathers
Gerald R. Stepnuk
Carol Ann St. Laurent
Darcy St. Laurent
Harald Strom
Robin Sukhan
Kevin Sydor
Randy and Vivian Taylor
Cynthia Trenaman
Dana H. Trenaman
Sebastian Walrond
Daniel and Erin White
Susan Wiebe

Steven W. Wu
Sandra Wu-Lee
Ryan Zaharia
Logan Zimmerman
Darlene and John Zwarych

For Information:

Nil

For the City:

Mr. J. Veitch, Acting Principal Planner, Planning, Property and Development Department
Mr. N. Yauk, Senior Planner, Planning, Property and Development Department
Mr. M. Pyl, Planner, Planning, Property and Development Department
Mr. K. Raban, Land Development Administrator, Planning, Property and Development Department

Exhibit "8" referred to in File DASZ 2/2012

ADMINISTRATIVE REPORT

Title: DASZ 2/12 – McGillivray-Dunkley

Issue: For consideration at the public hearing to rezone to allow for the construction of a multi-family residential development

Critical Path: Assiniboia Community Committee → Standing Policy Committee on Property and Development → Executive Policy Committee → Council

AUTHORIZATION

Author	Department Head	CFO	CAO
P. Regan	n/a	n/a	

RECOMMENDATIONS

1. That the plan of subdivision proposed under File DASZ 2/2012 be approved for preparation as a plan of subdivision by a Manitoba Land Surveyor in accordance with Schedule "A" for File DASZ 2/2012 dated April 3, 2012 with such minor changes as may be required, and registration in the Winnipeg Land Titles Office, subject to the following:

    a. That the Developer be required to enter into Development Agreement with the City satisfying all the conditions outlined in the report of the Administrative Coordinating Group dated March 30, 2012.

2. That the Winnipeg Zoning By-law No. 200/06 be amended by rezoning the subject land as shown on Schedule "A" for File DASZ 2/2012 dated April 3, 2012 to a "RMF-M" Residential Multi-Family district subject to the following:

    a. That the applicant enter into a Zoning Agreement with the City pursuant to Section 240(1) of the City of Winnipeg Charter to include the following conditions:

        i. That the building's height shall be fully contained within an upward line drawn at a 45 degree angle northward beginning at a point 6 feet above the shared property line of the subject site and the single family properties to the south, and rising toward the proposed building.

        ii. That for the development of any building or structure, plans shall be submitted showing the location and design of proposed buildings, the location and design of accessory parking areas, garbage enclosures,

fencing and landscaping to the Assiniboia Community Committee and the Director of Planning, Property and Development for plan approval prior to the issuance of any building or development permit, and thereafter to be maintained to the satisfaction of the Director of Planning, Property and Development.

3. That in lieu of the requirement for land dedication, a sum of money, calculated as ten percent (10%) of the increase in market value of the land and the creation of additional lots, be paid to the City for the purchase of land for purposes of the City other than streets.

4. That the Director of Planning, Property, and Development be authorized to certify any documents in connection therewith.

5. That in the event the matter is not proceeded with expeditiously and the by-law is not passed within two years after adoption of the report by Council, the matter shall be deemed to be concluded and shall not be proceeded with unless an extension of time is applied for prior to the expiry of the two-year period and Council approves the extension.

6. That the Director of Legal Services and City Solicitor be requested to prepare the necessary by-law in accordance with the above.

7. That the subdivision section of the by-law shall come info force and effect upon execution by the City of Winnipeg of the Development Agreement.

8. That the zoning section of the by-law shall come into force and effect when the plan of subdivision is registered in the Winnipeg Land Titles Office and the Zoning Agreement is registered in the Winnipeg Land Titles Office by caveat against the subject lands, provided that the said effective date occurs within one year from the date the by-law is passed.

9. That the plan of subdivision shall be approved and signed by the Director of Planning, Property, and Development within one year from the date the by-law is passed, failing which the matter shall be deemed to be concluded and shall not be proceeded with unless an extension of time is applied for prior to the expiry of the one-year period and Council approves the extension.

10. That the Director of Legal Services and City Solicitor be requested to do all things necessary for implementation in accordance with the terms of the City of Winnipeg Charter.

REASON FOR THE REPORT

- The applicant intends to rezone the subject property to accommodate a multi-family residential development comprised of two buildings – one a four storey, 84 unit apartment-style building, the other an eight unit row of townhouses.
- No variances are being proposed with this application.
- The applicant is proposing to rezone the subject property from “A” Agricultural district to “RMF-M” Residential Multi-Family district.

IMPLICATIONS OF THE RECOMMENDATIONS

If the recommendations of the Urban Planning Division are concurred in, the subject property will be rezoned.

CONSULTATION

In preparing this report there was consultation with:

N/A

SUBMITTED BY

Department	Planning, Property and Development
Division	Urban Planning Division
Prepared by	Michael Pyl
Date:	April 3, 2012
File No.	DASZ 2/12

APPENDIX 'A'

DATE: April 3, 2012
FILE: DASZ 2/12
RELATED FILES:
COMMUNITY: Assiniboia
NEIGHBOURHOOD #: 2.647

SUBJECT: To rezone the subject land from an "A" Agricultural District to an "RMF-M" Residential Multi-Family District.

LOCATION: South West corner of McGillivray BV and Dunkley St
LEGAL DESCRIPTION: Lot 52, Block: C, Plan 944 EXC Firstly: Wly 70 feet Perp, Secondly: Plan 40628

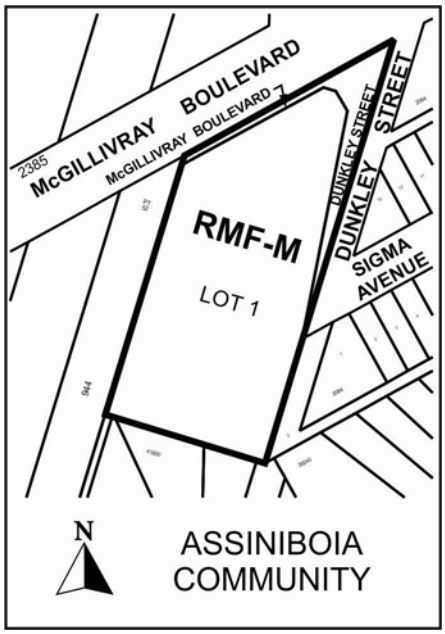

APPLICANT: PreCon Builders (Robin Lee)
1540 Taylor Ave
WINNIPEG MB R3N 1Y1

OWNER: Progressive Holdings Inc. / Nova Empire Ltd.
c/o Aikins, Macaulay
30th Fl 360 Main St
WINNIPEG MB R3C 4G1

RECOMMENDATION: Approval

REPORT SUMMARY

- The applicant intends to rezone the subject property to accommodate a multi-family residential development comprised of two buildings – one a four storey, 84 unit apartment-style building, the other an eight unit row of townhouses.
- No variances are being proposed with this application.
- The applicant is proposing to rezone the subject property from “A” Agricultural district to “RMF-M” Residential Multi-Family district.

SITE DESCRIPTION

- The subject property is located at the southwest corner of McGillivray Blvd and Dunkley St in the Whyte Ridge neighbourhood of the Charleswood-Tuxedo ward.
- The subject property is 2.6 acres in area, with approximately 330 ft. of frontage along McGillivray. It is currently vacant and is zoned “A” Agricultural district.
- Adjacent properties include single family dwellings to the south zoned “R1-M” Residential Single Family district, a mix of industrial and residential land uses to the east across Dunkley zoned “A”, a hydro corridor to the west zoned “A”, and a large format commercial development (Costco) to the north zoned “C4” Commercial Regional district.



Figure 1: Site map of subject property and surrounding neighbourhood

DESCRIPTION OF THE PROPOSED DEVELOPMENT

- The applicant intends to rezone the subject property to accommodate a multi-family residential development comprised of two buildings.
- Building “A” is a four storey, apartment-style building with 84 suites. It will be sited 25 ft. from McGillivray Blvd in the front yard and 16 ft. to the west property line. It is arranged in a “L” shape towards McGillivray and the west property line and will be 47.9 ft. tall.
- Building “B” consists of eight attached townhouse units. It will be sited at the back of the property 25 ft. from the rear property line. Combined, the applicant is proposing 92 units.
- The applicant will be provided 142 parking stalls. There will be 76 stalls provided underneath Building “A”, eight, two-stall garages for the townhouses, and 66 outdoor stalls.
- Along the east property line, a 2.5 ft. tall berm with 14 ft. tall coniferous trees is being proposed to screen the subject property. Along the south property line, a row of 14 ft. tall coniferous trees will be planted.

- Two approaches will be taken off Dunkley – one approach will provide access to the underground parking structure, while the other approach will provide access to the outdoor parking area and the townhouses.
- No variances are being proposed with this application.
- A subdivision is also required as part of this application to consolidate a number of underlying lots.

BACKGROUND

DAZ 211/2011

- After having been laid over for two previous meetings, the Assiniboia Community Committee recommended rejection of a proposed rezoning on the subject property to accommodate a 92 unit multifamily residential development on December 6, 2011.
- The applicant had also applied for a variance (DAV 11-132871D) in concurrence with the rezoning application. This application was rejected at Community Committee. They had applied for:
    - A front yard of 19.5 ft. instead of 25 ft.
    - An east corner side yard of 18 ft. instead of 20 ft.
    - A west side yard of 10.5 ft. instead of 16 ft.
- In addition to the variances, the proposed development differed from the current proposal in a number of ways:
    - There were no townhouses being proposed; the 92 units were contained entirely in a four storey apartment-style building.
    - There was also a berm along the south property line, but no berm along the east property line.
    - The proposed building height submitted at the time of application was 57 ft. tall instead of 47.9 ft. This was reduced to 50 ft. prior to the public hearing.
    - The building was set back 35.2 ft. from the rear property line at the time of application. This was increased to 47 ft. prior to the public hearing.
- At the public hearing, the Community Committee cited a lack of public consultation as the primary reason for its rejection.
- The applicant withdrew the application soon after.

ANALYSIS AND ISSUES

OurWinnipeg and Complete Communities Direction Strategy

- The Complete Communities Direction Strategy is one of four direction strategies supporting OurWinnipeg, the city's new long-range development plan, and is intended to gain statutory authority as a secondary plan. The strategy is intended to serve as a "playbook" to guide land use and development in Winnipeg. It received third reading at City Council on July 20, 2011, and became effective on August 17, 2011.
- Complete Communities is organized around an urban structure map – a spatial articulation of city building objectives. It guides the city's future realization, identifying and defining its physical components, not as they are today, but as they are envisioned. The Conference Board of Canada is forecasting that Winnipeg's population will grow by 180,000 people over the next 20 years; in order to address this sustainably, this growth will have to be accommodated in both greenfield and infill situations. The urban structure map

acknowledges that certain areas provide better opportunities for this than others; these are referred to as “Transformative Areas”.

- Transformative Areas as identified in Complete Communities include Downtown, Centres, Corridors, Rapid Transit Corridors, Major Redevelopment Sites, and New Communities, but the policies for Corridors are most applicable in this situation given the function of McGillivray Blvd.
- Corridors serve as key transportation routes throughout the City of Winnipeg. However, they serve the additional purpose of accommodating a mix of uses, functioning as vibrant urban places for Winnipeggers to live, work, and play. Given their prominence in daily life, they are ideal for transformative change. Through their residential, employment, and commercial intensification, people will be able to access a greater number of goods and services with one trip. Supporting Direction and Enabling Strategies include:
    - Focus a broad mix of residential, employment, and retail development within strategic locations along corridors.
- The subject property also abuts Whyte Ridge, an established residential neighbourhood that would be classified as a “Area of Stability” in Complete Communities. Primarily understood as the residential areas where the majority of Winnipeggers currently live, Areas of Stability will accommodate low to moderate density infill development to support more efficient use of land, infrastructure, and services as well as enhance housing choice and affordability. Infill in areas of stability will be supported with the intent of creating more complete communities. Direction and Enabling Strategies include:
    - Support low to moderate change in low density neighbourhoods through development and redevelopment that is complementary to the existing scale, character, and built form.
    - Provide clarity and promote compatibility between existing developments and new developments through design and development standards, such as the creation of *Infill Development Guidelines for Multiple-Family Developments in Low Density Neighbourhoods*.
    - Promote the form of buildings and spaces that are sensitive to the community context and address the transition between new and existing developments.
    - Encourage intensification to occur at centres and along corridors.
    - Support Complete Communities by ensuring diverse and high quality housing stock.
    - In order to meet the full life-cycle of housing needs within the community, promote a mix of housing type and tenure, such as duplexes, low rise apartments, secondary suites, semi-detached homes, and townhouses.

Zoning

- The Residential Multi-Family (RMF) district is intended to accommodate the development of multi-family units in neighbourhoods with medium to high residential densities.

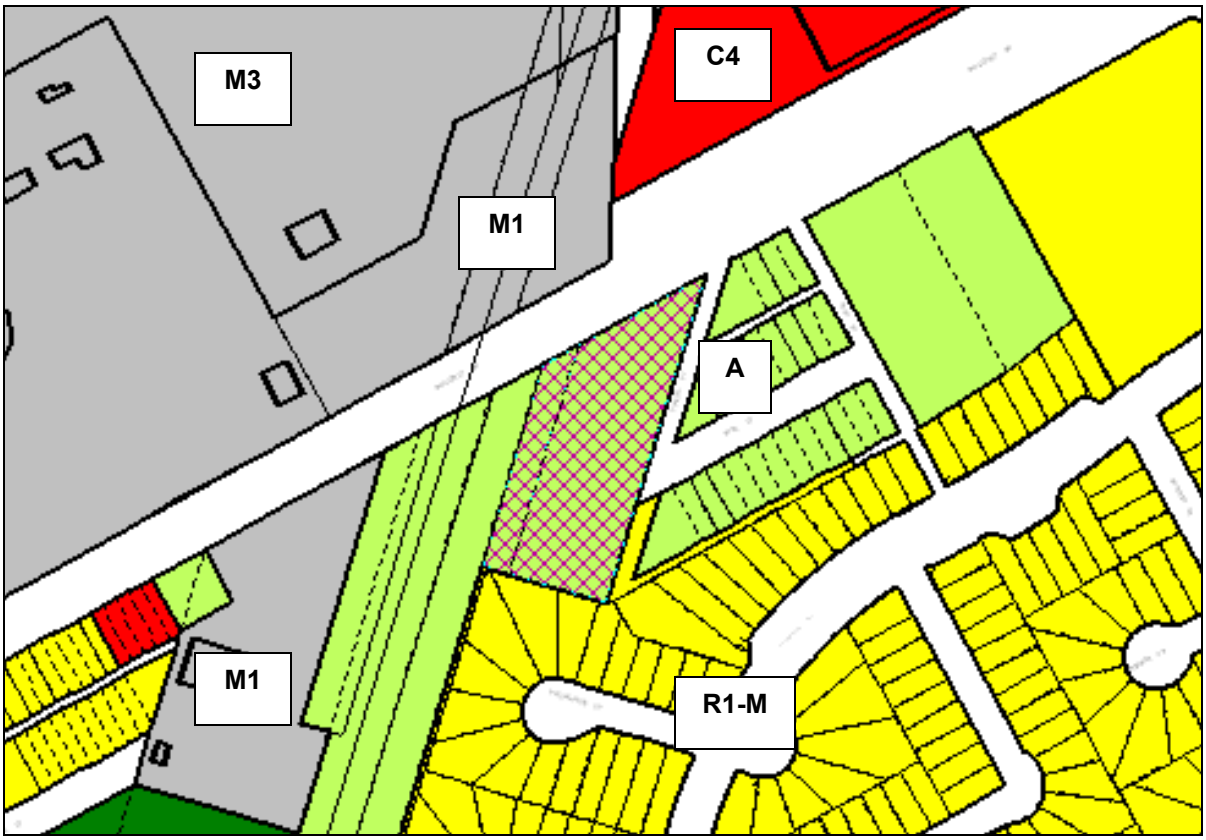

Figure 2: Zoning map of subject property and surrounding neighbourhood

- Section 62 of Zoning By-law No. 200/06 prescribes all permitted and conditional principal uses in each zoning district. The following uses are permitted or conditional in the "A" district:

Permitted	Conditional
Dwelling, single family detached	Agricultural grazing and feeding
Care home*	Apiary
Agricultural cultivation	Aviary
Post office/carrier depot	Feedlot
Protection and emergency services	Stable or riding academy
Community gardens	Community/recreation centre
Park/plaza/square/playground	Library
Animal hospital or veterinary clinic	College or university
Kennel	Commercial school
Landscape or garden supplies	Elementary or junior high school*
Utility facility, minor*	Senior high school*
Landscape/garden contractor or production	Boat dock, public access
Grain elevator	Cemetery, mausoleum, columbarium
Recycling collection centre	Day care centre*
	Place of worship*
	Gallery/museum
	Amusement enterprise, outdoor

	Camping ground Golf course Race track Sports or entertainment arena/stadium, outdoor Funeral chapel or mortuary Towing and storage facility Airport and associated facilities Commercial marina Utility facility, major Auction yard Heavy equipment sales, service, and rental Mining and extraction Garbage incineration and reduction Landfill/snow dump
* - Subject to use-specific standards	

Figure 3: Permitted and conditional uses in the "A" district

- The following uses are either permitted or conditional in the "RMF-M" district:

Permitted	Conditional
Dwelling, multi-family Dwelling, single-family detached Dwelling, two-family Assisted living facility Care home* Single room occupancy* Protection and emergency services Community gardens Park/plaza/square/playground Utility facility, minor*	Dwelling, live-work* Dormitory Neighbourhood rehabilitation home* Community/recreation centre Library College or university Elementary or junior high school* Senior high school* Boat dock, public access Day care centre* Place of worship* Transit station
* - Subject to use-specific standards	

Figure 4: Permitted and conditional uses in the "RMF-M" district

- Section 143 of the zoning by-law prescribes dimensional standards for the "RMF-M" district.

	Min. Lot Area (sq. ft.)	Min. Lot Area Per Dwelling Unit (sq. ft.)	Min. Front Yard (ft.)	Min. Rear Yard (ft.)	Min. Interior Side Yard (ft.)	Min. Corner Side Yard (ft.)	Principal Building Separation (ft.)	Max. Building Height (ft.)

RMF-M	9,000	800	25	25	8*	20	8	60
* - In the RMF-M district, where a building is more than one storey in height, the required interior side yard increases by 2 ft. for each storey above the ground floor to a maximum of 20 ft.								

Figure 5: Dimensional standards for the "RMF-M" district

- Section 161 of the zoning by-law prescribes general accessory parking requirements by land use. For multi-family dwellings, 1.5 spaces per unit are required, where 10% of the required parking spaces must be unassigned guest parking.

Public consultation

- Based on information provided by the applicant, the following is a summary of all public consultations following the first public hearing in December.
    - *January 17*: Developer met with several members of neighbourhood group OurWhyte Ridge (OWR) as well as City of Winnipeg planners and area Councillor. Developer stated their intent to make a new application that will incorporate feedback from area residents.
    - *January 26*: Developer met with 28 area residents at Whyte Ridge Community Centre. Area Councillor and planners were also in attendance. No plans were presented; discussion focused more on concerns.
    - *February 1*: Developer met with several members of OWR to discuss outcomes from January 26 meeting.
    - *February 13*: Developer met with OWR at Oxbow on the Seine to view a show-suite that was similar to what was being proposed. Developers presented several changes to the December 2011 site plan, including the removal of the fourth storey at the south end of the building, the removal of south-facing walls, the addition of privacy walls on south-facing balconies, alterations of the exterior façade, and increased landscaping including a higher berm in the south yard, a new berm in the east yard, and the addition of 70% more trees.
    - *February 19*: Developers launch project website "The Ridge".
    - *February 22*: A similar meeting was held as on February 13. Twenty-four homes in closest proximity to the property along Breckenridge and Scurfield were invited to Oxbow on the Seine to tour the show-suite and to view a presentation on the changes the developer was proposing to the December 2011 plan.
    - *February 28*: Developer met with 16 area residents at Whyte Ridge Community Centre. Intent was to ensure all attendees of the January 26 meeting could review the proposed changes.
    - *March 5*: Developer met with OWR and area Councillor where two new site plans were presented. One option included a three-storey apartment-style building that complies with the height and density maximums for the "RMF-S" zoning district, while the other option was a smaller four-storey building with a two-storey townhouse building on the south end of the site.
    - *March 7*: Developer hosted an open house at the Caboto Centre that was attended by 90 citizens.
    - *March 8*: Developer met with OWR to discuss the feedback received from the March 7 open house. They indicated that, based on feedback they received, they would proceed with the option that included townhouses along the south property line, but were open to other options.

Infill Guidelines for Multiple-Family Development

- In 2008, the Urban Planning Division produced infill development guidelines to help inform the design of multiple-family developments. While they have not been endorsed by Council and therefore cannot be considered as a policy direction, they are an articulation of design considerations to inform the Urban Planning Division's review.
- Below are a number of guidelines pulled from this document:
    - Site selection:
        - Encourage development along streets with sufficient capacity to accommodate the anticipated traffic generated by the development. For example, medium-density, multiple family infill housing that has the potential to generate a significant volume of vehicular traffic should be located on Artertial or Collector Streets to minimize the potential for traffic impact on Local Streets.
        - Encourage development on sites with reasonable access to Transit, AT pathways, public green space, and other public services and amenities.
    - Building setbacks:
        - Where the proposed building is taller than the maximum allowable height for the adjacent, existing zoning district, achieve an appropriate side yard setback to adjacent residential property by setting the building back so that it does not project into a 45° angular plane measured from the adjacent residential property line (starting at a six foot height above grade) to the top of the proposed infill building. This is illustrated in Figure 6 below.

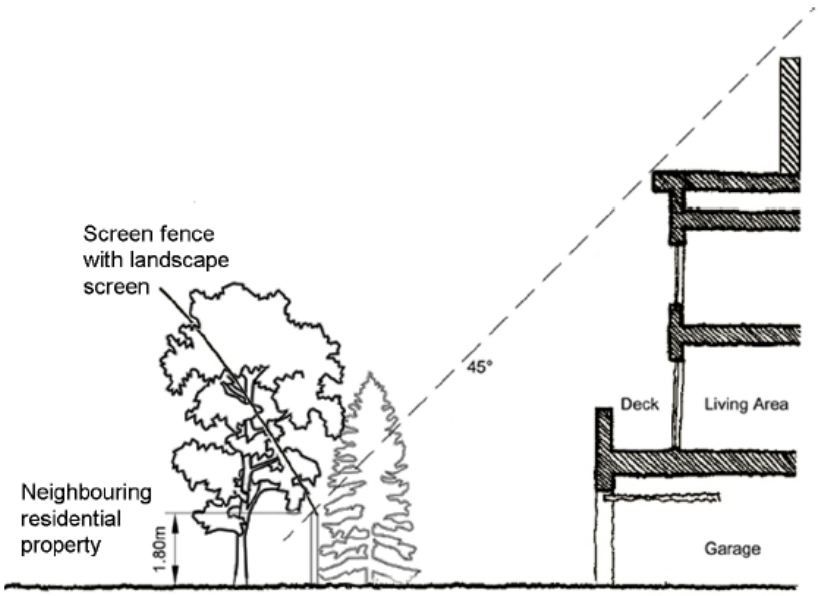

2.2.2 (ii) Achieve an appropriate rear yard setback to adjacent residential properties by setting the building back so it does not project into a 45º angular plane measured from the adjacent residential property line (starting at a six foot height above grade) to the top of the proposed infill building.

Figure 5: A tool promoted by the City of Winnipeg Infill Design Guidelines for Multiple Family Developments in Low Density Neighbourhoods

- Building orientation:
  - The main building façade should be oriented to face the public street and encourage opportunities for informal surveillance and human activity on the street.
  - Main building entrances should be clearly identifiable, visible, and accessible from the public street.
- Vehicular access and circulation:
  - Vehicular access and egress for medium-density, multiple-family infill housing developments should be oriented on Arterial or Collector streets, where possible.
  - The location and orientation of vehicle access and egress should minimize the impact on the pedestrian environment, pedestrian safety, and adjacent properties.
  - Limit the width and quantity of curb cuts as much as possible.
- Parking and service areas:
  - Reduce the prominence and extent of parking areas by incorporating them into building design, locating them in smaller clusters, locating them behind or between buildings, or screening them from public streets and adjacent properties.

        - Allow for greater amounts of landscaped open space by making driveways, garages, and parking lots as compact and discrete as possible.
        - Minimize the impact of service areas by incorporating them into the building design and/or integrating into the landscaped areas (screened with fencing and/or landscaping).
    - Built form guidelines:
        - Massing and height of new buildings should take into consideration the area context.
        - Encourage building design and use details that emphasize human scale and are pedestrian friendly at grade.
        - Reduce the perception of mass and height of large multiple-family buildings through the balanced use of colour, texture, and materials.
    - Landscaping:
        - Soften aspects of the infill development that would otherwise result in a jarring or harsh relationship to its immediate context.
        - Use landscaping to define the development's pedestrian and vehicle entry ways, walkways, and driveways.
        - Use landscaping to break-up or buffer the visual impacts of the development's paved areas, service areas, and secondary building walls on adjacent properties.
    - Lighting:
        - Light spill over and glare from any lighting source should be minimized.

Site design issues

- The site plans submitted at the time of application provide an overview of the proposed development. However, an additional level of detail will be required before final building permits can be issued. As a result, the Urban Planning Division is recommending that final site and building plans be approved by both the Assiniboia Community Committee and the Director of Planning, Property, and Development. The final design should address the following considerations:
    - Well-designed, safe, and universally accessible pedestrian pathways providing routes connecting the residential buildings to each other, the parking area, as well as Dunkley and McGillivray.
    - A detailed landscaping plan should be provided that conforms to the principles in the Infill Guidelines for Multiple-Family Developments.
        - Landscaping along McGillivray Blvd should be designed in such a way that positively contributes to the McGillivray streetscape.
    - An area of common open space should try to be provided as a focal point for community interaction and/or recreation. It should be purposefully integrated into the overall design of the development and not merely residual areas left over after the buildings and parking lot are sited. Common open space can include gardens, courtyards, recreation, or play areas and may include some of the following features:
        - Seasonal planting areas
        - Large, flowering trees
        - Seating areas
        - Pedestrian-scaled lighting
        - On-site community recreation amenities

- The overall building design should be made up of a distinctive, quality, architectural character and style that avoids monotonous and featureless building massing and design. Blank walls should be minimized – landscaping, aesthetic characters (such as projections and offsets), change in cladding material, glass, etc. can be used to break up tracts of continuous blank walls.
- Refuse storage areas and other building services should be located internal to the building. If not, they should be screened from view with appropriate fencing/landscaping. Enclosures should be clad with materials to match the exterior of the principal building.
- Any proposed fencing should be composed of high quality materials and design. The Urban Planning Division will look for the incorporation of brick pillars or other design features to enhance it.
- Details on the site's lighting plan should be provided to ensure any light trepass onto adjacent properties is minimized as much as possible.

RECOMMENDATION

At a macro-level scale, the proposed development is consistent with Council policy in the form of the Complete Communities Direction Strategy. The following Direction and Enabling Strategies are strongest in their support of the project:

- Focus a broad mix of residential, employment, and retail development within strategic locations along corridors such as McGillivray.
- Support Complete Communities by ensuring diverse and high quality housing stock.
- In order to meet the full life-cycle of housing needs within the community, promote a mix of housing type and tenure, such as duplexes, low rise apartments, secondary suites, semi-detached homes, and townhouses.

At a micro, site-level scale, the development is consistent by the Urban Planning Division's Infill Guidelines for Multiple-Family Developments. It is most strongly supported by the following guidelines:

- Encourage development along streets with sufficient capacity to accommodate the anticipated traffic generated by the development. For example, medium-density, multiple family infill housing that has the potential to generate a significant volume of vehicular traffic should be located on Artertial or Collector Streets to minimize the potential for traffic impact on Local Streets.
- Encourage development on sites with reasonable access to Transit, AT pathways, public green space, and other public services and amenities.
- Where the proposed building is taller than the maximum allowable height for the adjacent, existing zoning district, achieve an appropriate side yard setback to adjacent residential property by setting the building back so that it does not project into a 45° angular plane measured from the adjacent residential property line (starting at a six foot height above grade) to the top of the proposed infill building.
- Vehicular access and egress for medium-density, multiple-family infill housing developments should be oriented on Arterial or Collector streets, where possible.
- Soften aspects of the infill development that would otherwise result in a jarring or harsh relationship to its immediate context.

Given this consistency, the Urban Planning Division recommends approval of the proposed application.

This Report Submitted by: Michael Pyl
Planning, Property and Development Department
Urban Planning Division
Report Prepared by: PPD File # DASZ 2/2012

APPENDIX 'B'

Schedule "A" for File No. DASZ 2/12, Assiniboia Community Committee, dated April 3, 2012.

By-Law No. _____

File No. **DASZ 2/12**

Explanation

An application for the approval of the plan of subdivision shown outlined below and for a proposed zoning change to By-law No. 200/2006 by rezoning the land located on the southwest corner of McGillivray Boulevard and Dunkley Street from an "A" AGRICULTURAL DISTRICT to an "RMF-M" RESIDENTIAL MULTI-FAMILY DISTRICT to allow for the construction of a multiple family dwelling as shown outlined below.

Atlas Sheet No.

N

AJ19
ASSINIBOIA
COMMUNITY

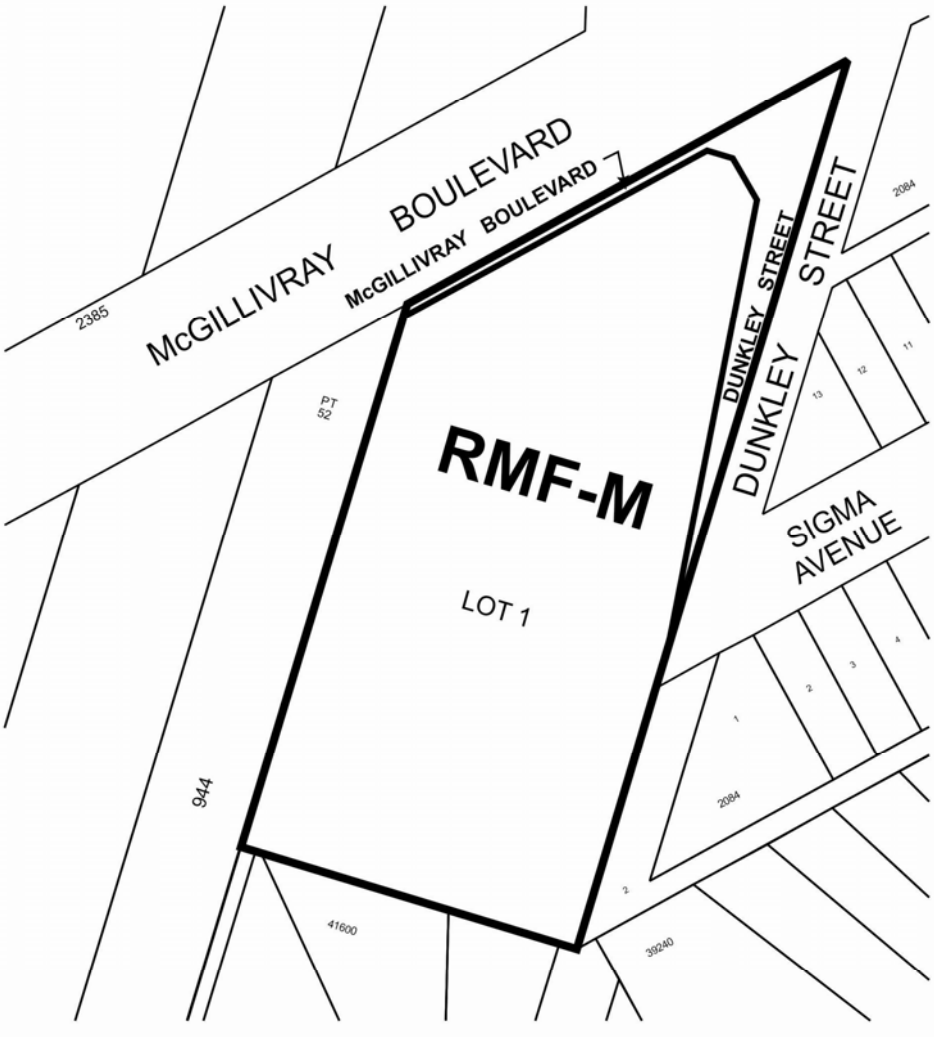

THIRD READING : _____ EFFECTIVE DATE : _____

ZONING AGREEMENT : YES ☐ NO ☐ CAVEAT No. _____

Schedule 'B'

REPORT OF THE ADMINISTRATIVE CO-ORDINATING GROUP – March 30, 2012

RE: PROPOSED REZONING ON LAND LOCATED AT SOUTHWEST CORNER OF MCGILLIVRAY BOULEVARD AND DUNKLEY STREET

It is recommended that the approval of DASZ 2/2012, if granted, be subject to the applicant entering into a Development Agreement with the City of Winnipeg, containing the following conditions:

1. The Developer shall, at no expense to the City, construct a wastewater sewer from Scurfield Boulevard and the projection of Post Street to the proposed development as determined by and to the satisfaction of the Director of Water and Waste.

2. The Developer shall, at no expense to the City, construct a land drainage sewer from Scurfield Boulevard and the projection of Post Street to the proposed development as determined by and to the satisfaction of the Director of Water and Waste.

3. The Developer shall, prior to the release of the subdivision mylars for registration in the Land Titles Office, pay for their share of the regional land drainage system (2012 rate = $10,891.19 /acre).

4. The Developer shall, at no expense to the City, transfer to the City and legally open, property required for a 2.325mm widening to the McGillivray Boulevard right-of-way along the full length of the subject property abutting McGillivray Boulevard, as determined by and to the satisfaction of the Director of Public Works.

5. The Developer shall, at no expense to the City, transfer to the City and legally open, property required for a widening to the Dunkley Street right-of-way along the full length of the subject property abutting Dunkley Street, in addition the Developer shall also, transfer to the City and legally open, property required for a right-of-way corner-cut in the southwest corner of the intersection of McGillivray Boulevard and Dunkley Street all as determined by and to the satisfaction of the Director of Public Works.

6. The Developer shall, pay to the City in cash, on demand, its share of the cost of the following services to be installed in McGillivray Boulevard in the future along the full length of the subject property abutting McGillivray Boulevard:

    a) a 4.0m in width by 200mm in thickness portland cement concrete lane of pavement and all related works;
    b) a1.5m in width by 100mm in thickness portland cement concrete sidewalk in the south boulevard;

c) street lighting in the south boulevard;
d) landscaping in the south boulevard;
all as determined by the Director of Public Works.

7.

a) The Developer shall pay, its share of the cost of the following services in Dunkley Street along the full length of the subject property abutting Dunkley Street:

    1. a 10.0m in width by 200mm in thickness portland cement concrete pavement and all related works;
    2. a 1.5m in width by 100mm in thickness portland cement concrete sidewalk on each side;
    3. ornamental street lighting;iv.) boulevard landscaping;v.) land drainage sewer all as determined by the Director of Public Works.

b) The Developer shall finance and construct the following of the above-referenced works as determined by and to the satisfaction of the Director of Public Works:

    1. an 10.0m in width by 200mm in thickness portland cement concrete pavement and all related works in Dunkley Street, from McGillivray Boulevard to a point approximately ½ way along the final proposed length of Dunkley Street or further, as determined by and to the satisfaction of the Director of Public Works;
    2. a 1.5m in width by 100mm in thickness portland cement concrete sidewalk in the west boulevard of Dunkley Street;
    3. street lighting in the west boulevard of Dunkley Street;
    4. landscaping in the west boulevard of Dunkley Street;
    5. land drainage sewer

c) The Developer's share of the cost of services as determined in a) above shall be off-set against the cost of services to be constructed pursuant to b) above and the City shall reimburse the Developer for the difference as determined by the Director of Public Works as it collects from the other benefiting lands in accordance with the City's Development Agreement Parameters prevailing at the time of reimbursement.

8. The Developer shall be responsible to control and to initiate the clean up of litter and refuse from the contractors and builders for this development, both on-site and off-site, during the installation of services and construction of buildings, until substantial completion of all construction. The clean up of litter and refuse shall be done on a regular basis as determined by the Director of Public Works. This shall include initiating action and assuming any costs in remedying the situation to the satisfaction of the Director of Public Works.

9. The Developer shall ensure that construction traffic uses access routes as determined by the Director of Public Works. The Developer shall maintain, at no expense to the City, the access routes in a clean, dust free and safe condition, free of dropped and tracked-on mud, and shall undertake regular scraping and

sweeping of streets until building construction, including landscaping is complete, all as determined by and to the satisfaction of the Director of Public Works.

10. The Developer shall, at no expense to the City, construct within the Planned Area abutting the Manitoba Hydro right-of-way, which abuts the CPR La Riviere Subdivision, a uniform fence 2.0m in height, as determined by and to the satisfaction of the Director of Public Works. The Developer is to permit the City to file a caveat against the title of the lot abutting the CPR La Riviere Subdivision requiring the owner to maintain and/or repair or replace the fence as originally constructed, to the satisfaction of the Director of Public Works. Said fence is intended to ensure that “pedestrian trespass”, to the railway tracks does not become a consequence of the subject development, thereby creating safety issues and jeopardizing existing and/or future anti-whistling regulations along the subject railway line. Said fence is consistent with the existing fence previously installed to the south and north of the subject property.

11. That vehicular access to the proposed development is to be to/from Dunkley Street in accordance with a design approved by and to the satisfaction of the Director of Public Works. No access to/from the proposed development is to be permitted off of McGillivray Boulevard.

12. The Developer shall, at no expense to the City, maintain the boulevard improvements for one year, in accordance with specifications approved by the Director of Public Works.

13. In lieu of dedication of land for public open space, the Developer shall pay to the City, prior to the release of the subdivision mylars for registration in the Land Titles Office, 8% of the appraised increase in value of the land plus the cost of landscaping and services which it would have contributed to the City if public open space had been dedicated.

14. Following completion of all major construction works, the Developer shall, at its cost, have the locations of the survey monuments within the Planned Are verified and, where the survey monuments have been disturbed, moved, covered, mutilated, or destroyed, have them replaced by a Manitoba Land Surveyor, who shall provide the Director of Planning, Property and Development with a certificate that all survey monuments within the Planned Area have been verified and/or replaced.

15. The Developer shall pay the full cost of engineering services provided by or on behalf of the City in connection with the installation of, and provision of as -built drawings by March 31 of the year following substantial performance showing, the services required to serve the Planned Area.

16. The Developer shall pay to the City, prior to the release of the subdivision mylars for registration in the Land Titles Office, $1,200.00 plus GST per acre of the Planned Area to defray the City's administration and related costs associated with the preparation and implementation of the Development Agreement.

THIS REPORT SUBMITTED BY:

Administrative Co-ordinating Group
File No. DASZ 2/2012
March 30, 2012

"K.T. Raban, P. Eng."
K.T. Raban, P. Eng.
Land Development Branch

R. J. Hartmann, P. Eng.
Public Works Department, Transportation Division

F. C. Mazur, P. Eng.
Water & Waste Department

D. Beaton, MLArch.
Parks, Riverbanks, & Community Initiatives Branch

Exhibit “6” referred to in File DASZ 2/2012

Home > Categories > Politics and Government > Our Whyte Ridge

Our Whyte Ridge

Sign Blog Signatures Email friends

Tweet 0

0

The Petition

I wish to express opposition to Pre-Con's 2nd proposal for the following reasons:

1. The 2nd proposal should be rejected for the same reasons used by the Assiniboia Community Committee to justify the rejection of the 1st proposal;

2. The proposal is not compatible with the area in which the apartment complex is to be situated, in that Whyte Ridge has always been characterized as a single family community.

3. The proposal will create a substantial adverse effect on our community: height issues, character of the building complex, impact on adjacent property values, privacy concerns, obstructed sight lines, and overall density issues (safety & security, increased traffic, and additional stress on community structures and programs).

Important: *Please enter in your information carefully and accurately. It is required for your entry to be deemed valid.*

*** All persons in your household 18 years old or older can sign this petition, it is not restricted to 1 per household!**

Sign petition

Fields marked with * are required

Name (First and Last): *

Email: *

Address: *

Phone #: *

Sponsor

Our Whyte Ridge Comn

Contact Petition Sponsc

Spread the word

Help promote this petitic widget on your site

Links

http://ourwhyteridge.wee

Sponsored links

The views expressed in th solely those of the petition do not in any way reflect tl iPetitions. iPetitions is sole of technical services to the sponsor and cannot be he any damages or injury or c arising from this petition. I adequate sponsor is name will consider the individual holder with which the petit created as the lawful spon

At least 18 years old?: * ☐ Yes, I verify that I am 18 years old or older

Display options

☑ Show my name in the online signature list

☐ Let iPetitions notify me on similar petitions

Sign now

iPetitions is owned and operated by Angle Three Associates, LLC - All material © Copyright Angle Three Associates, LLC, 1998-2012 -

#	Name
1	Tammy Becker
2	Charlene Wieler
3	Ryan Zaharia
4	JOHN bUKICH
5	Cindy Driedger
6	Kerry-Lynn McGregor
7	Pamela Piche
8	Jean R. Piche
9	Cherie MacEachern
10	Ivy Davy
11	Marie Davy
12	Steve LeClair
13	kevin mcwha
14	michelle d'souza
15	pat de jong
16	Hugh Sutherland
17	Amanda Cotterill
18	Shannon Hache
19	Darren Thorgilsson
20	Hosna Jabbari
21	Majid Khabbazian
22	Tricia Barrington
23	sarah fascione
24	Terry Fascione
25	Mohammad Jafari Jozani
26	doug zaporzan
27	Mahmoud Torabi
28	Elahe Askari
29	Shirley. Zaporzan
30	Maryam Bagheri
31	Erin White
32	Daniel White
33	Josh Cunningham