Agenda – Council – April 24, 2013

Report – Executive Policy Committee - April 17, 2013

Item No. 2 Text Amendment – Winnipeg Zoning By-law No. 200/2006 – Digital Signs and Billboards
File DAZ 201/2013

EXECUTIVE POLICY COMMITTEE RECOMMENDATION:

On April 17, 2013, the Executive Policy Committee concurred in the recommendation of the Standing Policy Committee on Property and Development, as amended, and submitted the following to Council:

1. That Winnipeg Zoning By-law No. 200/2006 be amended as per "Schedule A", with the following amendments:

    - That Section 5 of Schedule "A" be deleted in its entirety and replaced with the following:

      "Separation Distance from Traffic Decision Locations
      (5) A billboard, digital moving copy or a billboard, digital static copy sign must not be located within Restricted Areas as depicted in illustrations 9.1, 9.2, and 9.3."

    - That section 10 (c), of Schedule "A" be amended by deleting the words "12 square feet" and replacing it with the words "16 square feet".

2. That the Proper Officers of the City be authorized to do all things necessary to implement the intent of the foregoing.

Report – Executive Policy Committee - April 17, 2013

DECISION MAKING HISTORY:

EXECUTIVE POLICY COMMITTEE RECOMMENDATION:

On April 17, 2013, the Executive Policy Committee concurred in the recommendation of the Standing Policy Committee on Property and Development, with the following amendment:

- That Section 5 of Schedule "A" be deleted in its entirety and replaced with the following:

  "Separation Distance From Traffic Decision Locations
  (5) A billboard, digital moving copy or a billboard, digital static copy sign must not be located within Restricted Areas as depicted in illustrations 9.1, 9.2, and 9.3."

and submitted the matter to Council.

COMMUNITY COMMITTEE RECOMMENDATION:

On April 9, 2013, the Standing Policy Committee on Property and Development concurred in the recommendation of the Winnipeg Public Service with the following amendment:

- That section 10 (c), of Schedule "A" be amended by deleting the words "12 square feet" and replace it with the words "16 square feet".

and forwarded the matter to the Executive Policy Committee.

RE: **Text Amendment – Winnipeg Zoning By-law No. 200/2006 – Digital Signs and Billboards**
File DAZ 201/2013

For submission to: **Executive Policy Committee**

Prepared by: **Andrew Poitras, Senior Committee Clerk**
Standing Policy Committee on Property and Development

Report date: **April 10, 2013**

STANDING COMMITTEE RECOMMENDATION:

On April 9, 2013, the Standing Policy Committee on Property and Development concurred in the recommendation of the Winnipeg Public Service, as amended, and recommends to the Executive Policy Committee:

1. That Winnipeg Zoning By-law No. 200/2006 be amended as per "Schedule A", ***with the following amendment:***

A. That section 10 (c), of Schedule "A" be amended by deleting the words "12 square feet" and replacing it with the words "16 square feet".

2. That the proper officers of the City be authorized to do all things necessary to implement the intent of the foregoing.

Note: The wording in bold and italics denotes amendments made by the Standing Committee.

The Standing Policy Committee on Property and Development provided the following supporting reason(s) for its recommendation:

1. There has been substantial consultation and a great deal of information and education has been provided.

PUBLIC HEARING SUMMARY

File: DAZ 201/2013

Before: Standing Policy Committee on Property and Development
Councillor Browaty, Chairperson
Councillor Pagtakhan
Councillor Orlikow
Councillor Swandel

Public Hearing: April 9, 2013
Council Building, 510 Main Street

Applicant: The Director of Planning, Property and Development

Subject:

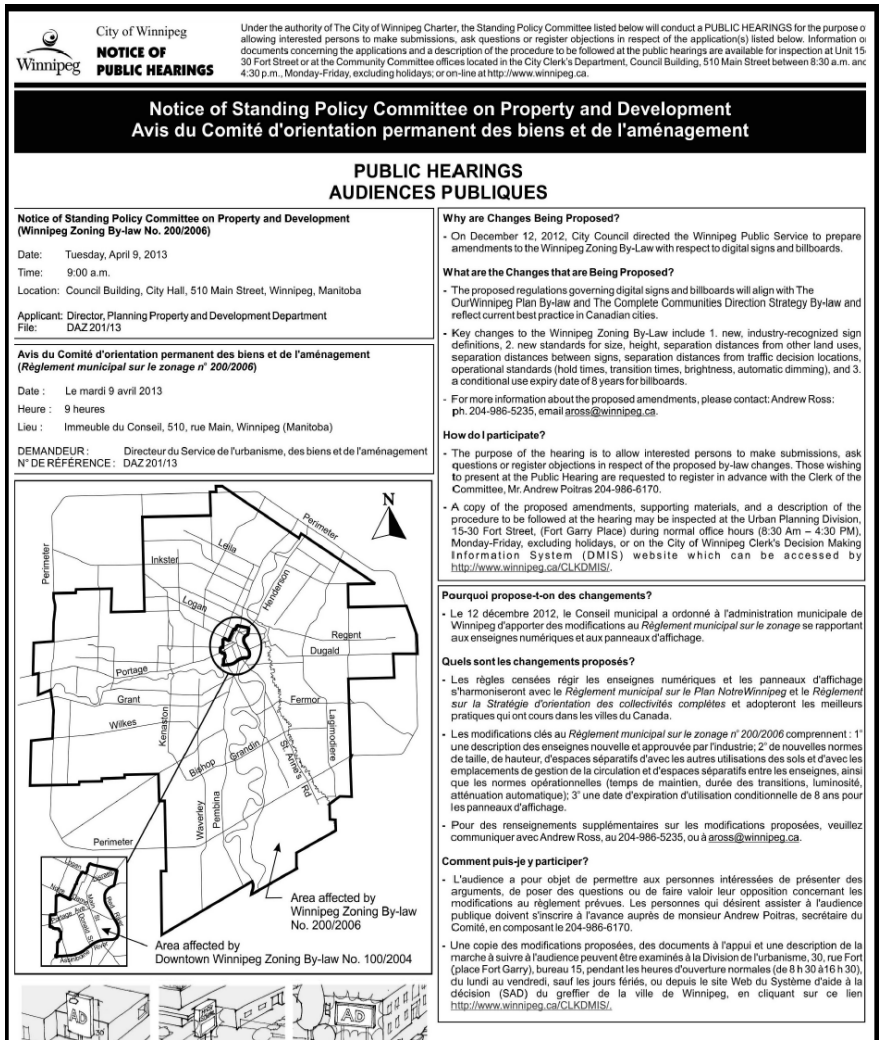

City of Winnipeg
NOTICE OF PUBLIC HEARINGS

Under the authority of The City of Winnipeg Charter, the Standing Policy Committee listed below will conduct a PUBLIC HEARINGS for the purpose o allowing interested persons to make submissions, ask questions or register objections in respect of the application(s) listed below. Information o documents concerning the applications and a description of the procedure to be followed at the public hearings are available for inspection at Unit 15- 30 Fort Street or at the Community Committee offices located in the City Clerk's Department, Council Building, 510 Main Street between 8:30 a.m. and 4:30 p.m., Monday-Friday, excluding holidays; or on-line at http://www.winnipeg.ca.

Notice of Standing Policy Committee on Property and Development
Avis du Comité d'orientation permanent des biens et de l'aménagement

PUBLIC HEARINGS
AUDIENCES PUBLIQUES

Notice of Standing Policy Committee on Property and Development
(Winnipeg Zoning By-law No. 200/2006)

Date: Tuesday, April 9, 2013
Time: 9:00 a.m.
Location: Council Building, City Hall, 510 Main Street, Winnipeg, Manitoba

Applicant: Director, Planning Property and Development Department
File: DAZ 201/13

Avis du Comité d'orientation permanent des biens et de l'aménagement
(*Règlement municipal sur le zonage n° 200/2006*)

Date : Le mardi 9 avril 2013
Heure : 9 heures
Lieu : Immeuble du Conseil, 510, rue Main, Winnipeg (Manitoba)

DEMANDEUR : Directeur du Service de l'urbanisme, des biens et de l'aménagement
N° DE RÉFÉRENCE : DAZ 201/13

Why are Changes Being Proposed?

- On December 12, 2012, City Council directed the Winnipeg Public Service to prepare amendments to the Winnipeg Zoning By-Law with respect to digital signs and billboards.

What are the Changes that are Being Proposed?

- The proposed regulations governing digital signs and billboards will align with The OurWinnipeg Plan By-law and The Complete Communities Direction Strategy By-law and reflect current best practice in Canadian cities.
- Key changes to the Winnipeg Zoning By-Law include 1. new, industry-recognized sign definitions, 2. new standards for size, height, separation distances from other land uses, separation distances between signs, separation distances from traffic decision locations, operational standards (hold times, transition times, brightness, automatic dimming), and 3. a conditional use expiry date of 8 years for billboards.
- For more information about the proposed amendments, please contact: Andrew Ross: ph. 204-986-5235, email aross@winnipeg.ca.

How do I participate?

- The purpose of the hearing is to allow interested persons to make submissions, ask questions or register objections in respect of the proposed by-law changes. Those wishing to present at the Public Hearing are requested to register in advance with the Clerk of the Committee, Mr. Andrew Poitras 204-986-6170.
- A copy of the proposed amendments, supporting materials, and a description of the procedure to be followed at the hearing may be inspected at the Urban Planning Division, 15-30 Fort Street, (Fort Garry Place) during normal office hours (8:30 Am – 4:30 PM), Monday-Friday, excluding holidays, or on the City of Winnipeg Clerk's Decision Making Information System (DMIS) website which can be accessed by http://www.winnipeg.ca/CLKDMIS/.

Pourquoi propose-t-on des changements?

- Le 12 décembre 2012, le Conseil municipal a ordonné à l'administration municipale de Winnipeg d'apporter des modifications au *Règlement municipal sur le zonage* se rapportant aux enseignes numériques et aux panneaux d'affichage.

Quels sont les changements proposés?

- Les règles censées régir les enseignes numériques et les panneaux d'affichage s'harmoniseront avec le *Règlement municipal sur le Plan NotreWinnipeg* et le *Règlement sur la Stratégie d'orientation des collectivités complètes* et adopteront les meilleurs pratiques qui ont cours dans les villes du Canada.
- Les modifications clés au *Règlement municipal sur le zonage n° 200/2006* comprennent : 1° une description des enseignes nouvelle et approuvée par l'industrie; 2° de nouvelles normes de taille, de hauteur, d'espaces séparatifs d'avec les autres utilisations des sols et d'avec les emplacements de gestion de la circulation et d'espaces séparatifs entre les enseignes, ainsi que les normes opérationnelles (temps de maintien, durée des transitions, luminosité, atténuation automatique); 3° une date d'expiration d'utilisation conditionnelle de 8 ans pour les panneaux d'affichage.
- Pour des renseignements supplémentaires sur les modifications proposées, veuillez communiquer avec Andrew Ross, au 204-986-5235, ou à aross@winnipeg.ca.

Comment puis-je y participer?

- L'audience a pour objet de permettre aux personnes intéressées de présenter des arguments, de poser des questions ou de faire valoir leur opposition concernant les modifications au règlement prévues. Les personnes qui désirent assister à l'audience publique doivent s'inscrire à l'avance auprès de monsieur Andrew Poitras, secrétaire du Comité, en composant le 204-986-6170.
- Une copie des modifications proposées, des documents à l'appui et une description de la marche à suivre à l'audience peuvent être examinés à la Division de l'urbanisme, 30, rue Fort (place Fort Garry), bureau 15, pendant les heures d'ouverture normales (de 8 h 30 à 16 h 30), du lundi au vendredi, sauf les jours fériés, ou depuis le site Web du Système d'aide à la décision (SAD) du greffier de la ville de Winnipeg, en cliquant sur ce lien http://www.winnipeg.ca/CLKDMIS/.

Exhibits Filed:

1. Council Decision of December 12, 2012; contains report from the Director of Planning, Property and Development dated November 15, 2012
2. Statutory Public Notice (newspaper Advertisements)
3. Notification of Public Hearing to adjacent Municipalities and Planning Districts
4. Report from the Planning and Land Use Division dated March 22, 2013
5. Communication dated April 4, 2013, from Charles L. Chappell, Aikins, MacAulay and Thorvaldson LLP, with respect to the application
6. Presentation submitted at the public hearing by Ross Andrew, Planning, Property and Development Department, with respect to the application
7. Communication submitted at the public hearing by John Prystanski, with respect to the application

REPRESENTATIONS:

In Support:

Barry Thorgrimson, Director, Planning, Property and Development (Applicant)

In Opposition:

Scott Baird
Charles L. Chappell
Ken Devine
Richard Grigaitis
John Hoeschen
Kimberley Labossiere
Peter Maconachie
Jeff Pinchin
John Prystanski

For Information:

Derrick Amy

For the City:

Mr. B. Smith, Chief Planner, Planning, Property and Development Department
Mr. A. Ross, Planner, Planning, Property and Development Department
Mr. M. Robinson, Senior Planner, Planning, Property and Development Department
Mr. M. Grady, Administrator of Zoning and Permits, Planning, Property and Development Department

Exhibit "1" referred to in File DAZ 201/2013

ADMINISTRATIVE REPORT

Title: **DAZ 201/13 - Zoning By-law Amendments – Digital Signs and Billboards**

Critical Path: **Standing Policy Committee on Property and Development - EPC - Council**

AUTHORIZATION

Author	Department Head	CFO	CAO
B. Smith	B. Thorgrimson	N/A	D. Joshi

RECOMMENDATIONS

1. That Winnipeg Zoning By-law No. 200/2006 be amended as per "Schedule A".

2. That the proper officers of the City be authorized to do all things necessary to implement the intent of the foregoing.

REASON FOR THE REPORT

This report presents a draft Zoning By-Law amendment for Council's consideration in response to Council's adoption of a previous report on December 12, 2012. As per Recommendation 1 of the report, "Digital Sign and Billboard Regulations and Fees", the Winnipeg Public Service was directed by Council to *"prepare amendments to the Winnipeg Zoning By-Law pertaining to Advertising Signs, Electronic Message Centres signs, Electronic Message Centres as 'Advertising Signs' and Electronic Message Centres as 'Event Signs', in accordance with Appendix 'A' as follows:*

Category 1: Sign Definitions
Category 2: Billboard Sign Locations
Category 3: Billboard Sign Sizes
Category 4: Billboard Sign Heights
Category 5: Billboard Separation from Other Land Uses
Category 6: Billboard Separation Distances Between Signs
Category 7: Billboard Expiry Dates
Category 8: Digital Accessory Sign Locations

Category 9: Digital Accessory Sign Sizes
Category 10: Digital Accessory Sign Heights
Category 11: Digital Accessory Sign Separation Between Signs
Category 12: All Digital Signs – Effective Operation of Public Streets
Category 13: All Digital Signs – Brightness

and amendments to the Planning, Development and Building Fees By-law, in accordance with Appendix "A" - Category 14: Fees.

The amendments herein, attached as "Schedule A", provide the by-law amendments for Categories 1-13. This report does not deal with Category 14: Fees, as on January 1, 2013, the Planning, Property and Development Department implemented the Permit and Conditional Use fee changes in Category 14, by making amendments to *The Planning, Development, Building and Vacant Building Fees & Charges 2013*.

IMPLICATIONS OF THE RECOMMENDATIONS

General Implications - If Council passes the proposed amending by-law, regulations governing Digital Signs and Billboards will 1) align with *OurWinnipeg* and the *Complete Communities Direction Strategy*, 2) reflect current best practice in Canadian cities, 3) include new, industry-recognized definitions, 4) help ensure these signs are sensitive to their context with respect to locations, dimensions, separation distances, and brightness, and 5) reflect a balanced approach that provides options for the sign industry.

Regulatory Implications - Regulations in the Winnipeg Zoning by-law related to Digital Signs and Billboards will be updated and amended.

HISTORY

On July 5, 2011, Standing Policy Committee on Property and Development recommended that the
Planning, Property and Development Department report back within 180 days on:

1. *A cross-jurisdictional analysis of the existing land-use regulations and civic revenue opportunities in*
   major North American Cities governing:
   A. Advertising Signs
   B. Electronic Message Centres signs
   C. Electronic Message Centres as 'Advertising Signs' and
   D. Electronic Message Centres as 'Event Signs'
2. *A summary of existing land-use regulations in Winnipeg governing Electronic Message Centres*
   (including the impact of various Neighbourhood Plans and Overlays);
3. *An examination of the current trends in Winnipeg with regards to Electronic Message Centres;*
4. *Recommendations and options regarding changes to regulations governing Advertising Signs,*
   Electronic Message Centres signs, Electronic Message Centres as 'Advertising Signs' and Electronic Message Centres as 'Event Signs' in the City of Winnipeg.

Best practice research was done and an inventory of existing billboard Advertising Signs (including
photos) was created and entered into GIS. Discussion took place with the cities of Edmonton, Calgary
and Toronto on their processes for consultation in their recent sign by-law reviews.

Stakeholder consultations took place with Business Improvement Zones, the Manitoba Sign Association, representatives from the outdoor sign industry and CentreVenture. Three separate rounds of consultations were held. Surveys were distributed to BIZ groups through the Winnipeg BIZ Association.

On November 30, 2012, Standing Policy Committee on Property and Development concurred with Recommendation 1 of the Public Service report, "Digital Signs and Billboard Regulations and Fees", with the following amendment:

> 1) *Category 7: Billboard Expiry Dates: Delete the words "5-year expiry date for all billboards" and replace with the words "8- year expiry date for all billboards";*

On December 5, 2012, the Executive Policy Committee concurred in the recommendations of Standing Policy Committee, with no amendments to Recommendation 1. At its December 12, 2012 meeting, Council concurred in the recommendations of EPC, and directed the Winnipeg Public Service to prepare corresponding amendments to the Zoning By-Law to be presented at a public hearing.

The present report provides the Zoning By-Law amendments, as per Recommendation 1, Categories 1-13. The following are the key amendments to the Zoning By-Law:

- Adding new sign definitions in *Section 48 of PART 2: DEFINITIONS*
- Adding a clause after *Section 59(3)(d) of PART 4: USE REGULATIONS* requiring a default conditional use expiry date of 8 years for billboard sign uses
- Adding a new *Section 98.1 (Billboard Signs),* containing use specific standards for billboards including size, height, roof signs, separation distances from other land uses, separation distances between signs, separation distances from traffic decision locations, and operational standards (hold times, transition times, brightness, automatic dimming).
- Amending *Table 5-15* in *subsection (2)* of *Section 183 (Accessory Signs)* to allow:
  - digital static copy signs in all C2 PDO-1, PR, RMF, R, RMU, CMU, and EI districts, and
  - digital reader boards in C1 and A districts,
  up to 12 square feet in size, and requiring a variance for such signs greater than 12 square feet in size.
- Adding a new *Section 183.1 (Digital moving copy signs, digital reader boards, digital static copy signs, and digital static copy, 24-hour hold signs),* containing standards for digital accessory signs including locations, maximum number of signs, separation distances from traffic decision locations, and operational standards (hold times, transition times, brightness, automatic dimming).

The following change was added by the Public Service after December 12, 2012, in order to provide additional clarity for an existing regulation:

- In *Section 184*, adding a clause after *subsection (9)* prohibiting digital accessory signs on mobile signs.

It is noted that other minor changes have been made to the wording of some of the proposed amendments since December 12, 2012, in order to add clarity or aid in interpretation. These changes are not substantive and do not change the intent of any clauses as originally proposed.

FINANCIAL IMPACT

Financial Impact Statement Date: February 12, 2013

Project Name:

Zoning By-law Amendments – Digital Signs and Billboards

COMMENTS:

There are no financial implications associated with this report.

"Original Signed By"
Mike McGinn, CA
Manager of Finance

CONSULTATION

In preparing this report there was consultation with:

Internal Consultation:
Lori Garet, Public Works

External Consultation:
The Winnipeg BIZ associations (BIZ)
The Manitoba Sign Association (MANSA)
Representatives of the Outdoor Sign Association

SUBMITTED BY

Department:	Planning, Property and Development
Division:	Urban Planning
Prepared by:	Andrew Ross, MCP
Date:	March 22, 2013
File No.	DAZ 201/13

O:\Reports Directive\Planning and Land Use\Long Range Planning\Digital Signs and Billboards Amending By-Law Mar 2013\RIS - Zoning By-Law Amendments - Digital Signs and Billboards Mar 19, 2013



Adobe Acrobat Document

Attachment: Schedule A - Amending By-Law - Digital Signs and Billboards

UD2013-028

Schedule A: Digital Signs and Billboards Amending By-law

THE CITY OF WINNIPEG

BY-LAW NO. 36/2013

A By-law of The City of Winnipeg to amend Winnipeg Zoning By-law No. 200/2006 with respect to digital signs and billboards.

THE CITY OF WINNIPEG, in Council assembled, enacts as follows:

1 *The Winnipeg Zoning By-law No. 200/2006 is amended*

(1) in section 48:

(a) by adding the following definitions after the definition "bed and breakfast":

"**billboard, digital moving copy**" means a sign or billboard with copy displayed utilizing electronic screens, televisions, computer video monitors, liquid crystal displays, light emitting diode displays, or any other electronic technology where the sign copy displays moving images, and which directs attention to a business, commodity, service, thing, message, or entertainment conducted, sold, or offered elsewhere than upon the same zoning lot on which that sign is located.

"**billboard, digital static copy**" means a sign or billboard capable of changing the message or copy on the sign electronically, where all the sign copy is fixed for a set period of time, and which directs attention to a business, commodity, service, thing, message, or entertainment conducted, sold, or offered elsewhere than upon the same zoning lot on which that sign is located.

"**billboard, poster**" means a sign or billboard that does not utilize digital message technology, and that directs attention to a business, commodity, service, thing, message, or entertainment conducted, sold, or offered elsewhere than upon the same zoning lot on which that sign is located.

(b) by adding the following definition after the definition "animated sign":

"**automatic dimming**" means technology that continually adjusts the brightness of a sign in relation to ambient light levels.

(c) by adding the following definitions after the definition "copy area":

"**digital moving copy**" means a sign with copy displayed utilizing electronic screens, televisions, computer video monitors, liquid crystal

displays, light emitting diode displays, or any other electronic technology where the sign copy is not fixed for a set period of time.

"**digital reader board**" means a changeable copy sign that uses light emitting diodes. Messages are composed of an ordered sequence of alphanumeric characters on a black or dark background.

"**digital static copy**" means a sign with copy displayed utilizing electronic screens, televisions, computer video monitors, liquid crystal displays, light emitting diode displays, or any other electronic technology where all the sign copy is fixed for a set period of time.

"**digital static copy, 24-hour hold**" means a sign with copy displayed utilizing electronic screens, televisions, computer video monitors, liquid crystal displays, light emitting diode displays, or any other electronic technology where the sign copy is fixed for 24 hours through the use of a factory preset that is not adjustable to the user and cannot be altered without the assistance of the manufacturer.

(d) by adding the following definition after the definition "free-standing sign":

"**hold time**" means the length of time a sign message is fixed in place before changing to a different sign message.

(e) by adding the following definition after the definition "sign surface area":

"**transition time**" means the length of time it takes to change from one sign message to another.

(f) by adding the following definition after the definition "towing and storage facility":

"**traffic decision location**" means an area adjacent to one of the following:

(i) an intersection with traffic signals;
(ii) a pedestrian corridor; or
(iii) a railway crossing.

(2) in section 48:

(a) in the definition "billboard sign", by striking out "See advertising sign" *and substituting* "means the following:
(i) billboard, digital moving copy;
(ii) billboard, digital static copy; or
(iii) billboard, poster."

(b) and in the definition "flashing sign", by striking out "an electronic message centre" *and substituting* "a digital moving copy sign, a digital

reader board, a digital static copy sign or a digital static copy, 24-hour hold sign".

(c) *by striking out the definitions* "advertising sign" and "electronic message board sign".

(3) *in subsection 59(3):*
by adding the following after clause (d):

(e) a Conditional Use Order to establish a billboard sign use expires 8 years from the date of the Order, unless the Order otherwise specifies.

(4) *in subsection 60(1):*
in "signs uses", by striking out "advertising signs and billboards" *and substituting* "billboard signs".

(5) *in Table 4-1: Principal Use Table:*
(a) *under Use Category/Type, by inserting "Billboard" before "Signs";*
(b) *under Use Category/Type "Signs", by striking out the row,* "Advertising sign" *and substituting the following rows:*

Billboard, Digital Moving Copy*																					98.1	
Billboard, Digital Static Copy												C*	C*					C*	C*	C*	98.1	0
Billboard, Poster												C*	C*					C*	C*	C*	98.1	0

(6) *by adding the following after section 98:*

Billboard Signs

98.1. All billboard signs must comply with the following standards:

Height and Size
(1) The height and size must not exceed the limits shown in Table 4-4 below:

TABLE 4-4: Height and Size

Maximum Height (ft)	Maximum Sign Surface Area (sq ft)
30 [Note a]	200
Note a: If the billboard sign is attached to a building or is free standing within 5 feet of a building, the maximum permitted height of the billboard sign is the height of the building wall.	

Roof Billboard Signs

(2) No billboard sign is permitted on the roof of a building.

Separation Distance From Other Uses

(3) Placement (including separation distance from other uses) must comply with Table 4-5 below:

TABLE 4-5: Placement Requirements

Residential	**Park, Plaza, Square, Playground/ Top of Riverbanks**	**Historic Buildings and Hospitals** [note c]
A billboard sign must not face an adjacent residential use unless the billboard sign is not visible from the adjacent residential use [note a]	There must be a minimum separation distance of 250 ft between a billboard sign and these uses unless the billboard sign is not visible from the Park, Plaza, Square, Playground/ Top of Riverbank	There must be a minimum separation distance of 150 ft between a billboard sign and a Historic Building or a Hospital unless the billboard sign is not visible from the Historic Building or Hospital. A billboard sign must not be mounted on a Historic Building

Notes:

a. If an existing billboard, digital moving copy or a billboard, digital static copy sign faces and is visible from an adjacent residential use which is established within 100 ft of the billboard, digital moving copy or billboard, digital static copy sign after the sign is put in place, the sign must be turned off from 10:00 PM to 7:00 AM every day of the week.

c. A Historic Building is a building on the "Buildings Conservation List" in the Historical Buildings By-Law.

Separation Distance From Other Billboard Signs

(4) A billboard sign must not be located closer than 500 ft from any other billboard sign which is on the same street and facing the same direction of traffic.

Separation Distance From Traffic Decision Locations

(5) A billboard sign must not be located within Restricted Areas as depicted in illustrations 9.1, 9.2, and 9.3.

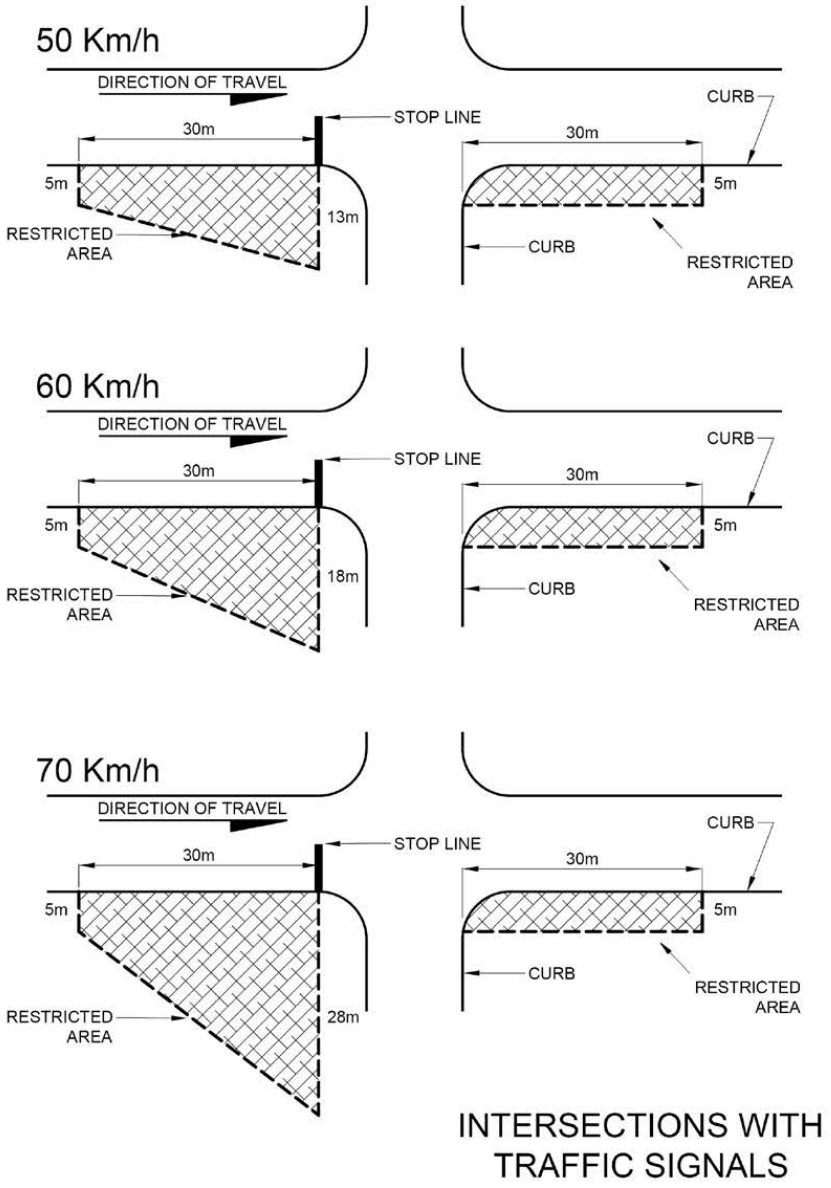

Illustration 9.1: Separation Distance From Intersections With Traffic Signals

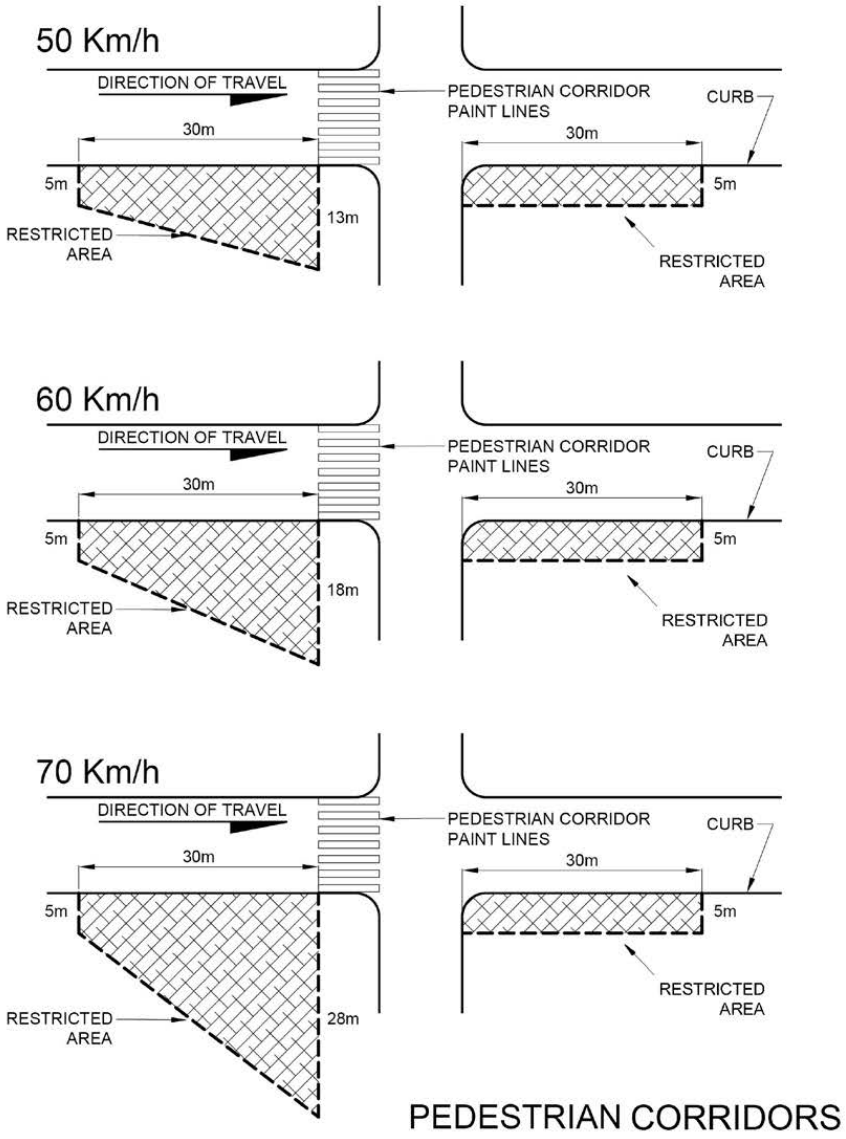

Illustration 9.2: Separation Distance From Pedestrian Corridors

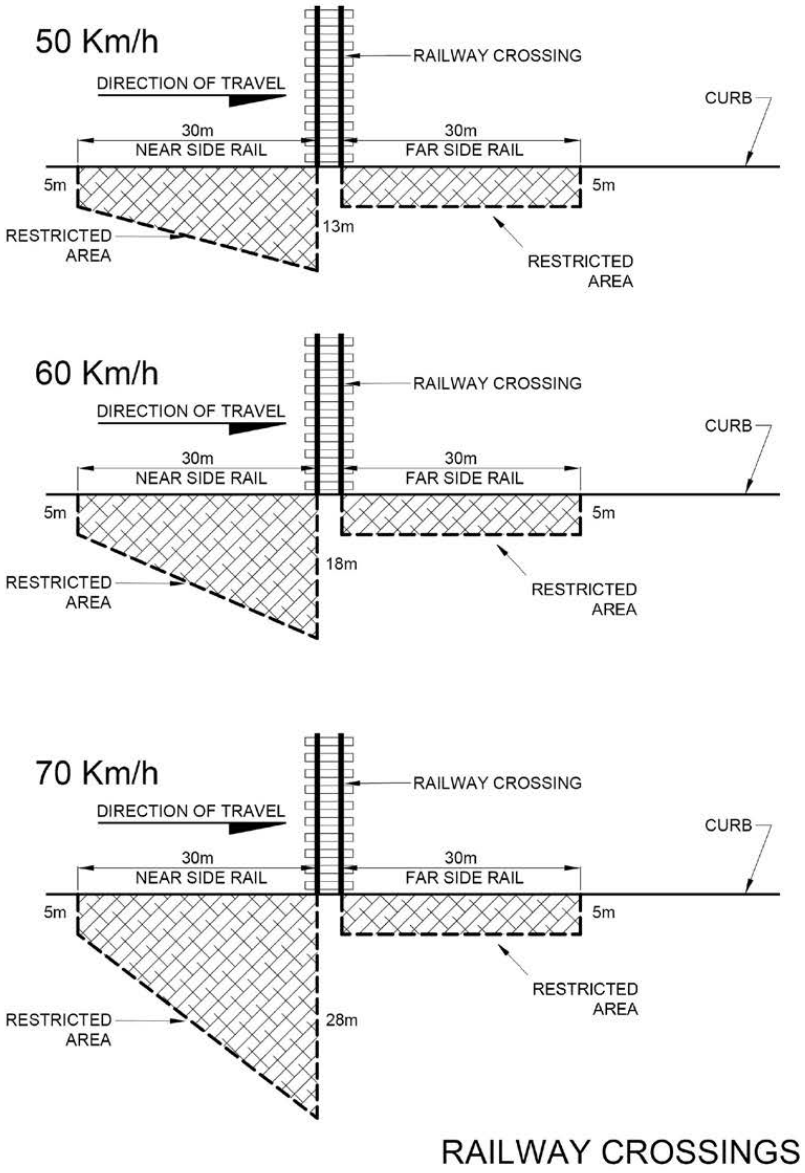

Illustration 9.3: Separation Distance From Railway Crossings

Operational Standards

(6) Billboard signs must comply with the following standards for the display of sign messages:

(a) must not display graphics which imitate or resemble any traffic control device;

(b) must have a minimum hold time of 6 seconds;

(c) must have a maximum transition time of .25 seconds;

(d) must not exceed a brightness level of .3 foot-candles above ambient light conditions;

(e) must utilize automatic dimming.

(7) in section 161,Table 5-9: General Accessory Parking Requirements

(a) under Parking Category 0 by striking out "Advertising Sign" and substituting "Billboard, Digital Moving Copy/ Billboard, Digital Static Copy/ Billboard, Poster"

(8) in section 182, by striking out subsection (2) and substituting the following:

Flashing, Scintillating and Rotating Signs

(2) (a) flashing signs, scintillating signs, rotating signs or beacons are not permitted in any zoning district except the C2, C3, C4, CMU, MMU, M1, M2 and M3, zoning districts.
(b) a Conditional Use Order is required for the erection of a flashing sign or scintillating sign that has copy height of more than 9 inches, or any rotating sign or beacon.
(c) flashing features, scintillating features, rotating features, and beacons are not permitted on mobile signs.

(9) in subsection 183(2), by striking out "Table 5-15" *wherever it occurs and substituting* "Table 5-15.1".

(10) in Table 5-15:

(a) by striking out "Table 5-15 wherever it occurs" *and substituting* "Table 5-15.1".

(b) in Note c, by adding the words "or digital reader board" *after* "board".

(c) by adding the following after Note d:

e. "Maximum size of digital static copy signs in all C2 PDO-1, PR, RMF, R, RMU, CMU, EI districts; and digital reader boards in C1, A districts, is 12 square feet."

(11) by adding the following after section 183*:*

Digital moving copy signs, digital reader boards, digital static copy signs, and digital static copy, 24-hour hold signs

183.1. The following standards apply to digital moving copy signs, digital reader boards, digital static copy signs, and digital static copy, 24-hour hold signs:

District-Specific Regulations

(1) All digital signs accessory to any use must be consistent with locations shown in Table 5-15.2.

Table 5-15.2: Digital Accessory Sign Locations

District	Digital Reader Boards	Digital Static Copy Signs	Digital Moving Copy Signs
C1, A	Allowed	Not allowed	Not allowed
C2, C3, C4, M1, M2, M3, MMU	Allowed	Allowed	Not allowed
CMU, EI, C2 PDO-1, RMU	Allowed	Allowed	Not allowed
PR, RMF, R	Allowed [note a]	Allowed [note a] [note b]	Not allowed
NOTES: a. For schools, community centres, and religious institutions only. b. Must be turned off from 10:00 PM to 7:00 AM every day of the week.			

Maximum Number of Signs

(2) Maximum number of free-standing digital signs allowed per lot is 1, except in:
(i) C3 districts, where the maximum is 2; and
(ii) C4 districts, where the maximum is the greater of 1 per frontage or 2.

Operational Standards

(3) Digital moving copy signs, digital reader boards, digital static copy signs, and digital static copy, 24-hour hold signs must comply with the following standards for the display of sign messages:

(a) must not display graphics which imitate or resemble any traffic control device;

(b) must have a minimum hold time of 6 seconds except in all PR, RMF and R districts, where a hold time of 60 seconds is required;

(c) must have a maximum transition time of 0.25 seconds;

(d) must not exceed a brightness level of 0.3 foot-candles above ambient light conditions; and

(e) must utilize automatic dimming.

Separation Distance From Traffic Decision Locations

(4) (a) Digital moving copy signs, digital reader boards and digital static copy signs must not be located within Restricted Areas as depicted in illustrations 18.1, 18.2, and 18.3.

(b) A digital static copy, 24-hour hold sign must not be located within Restricted Areas as depicted in illustrations 18.1, 18.2, and 18.3 unless the Director of Public Works first provides written approval.

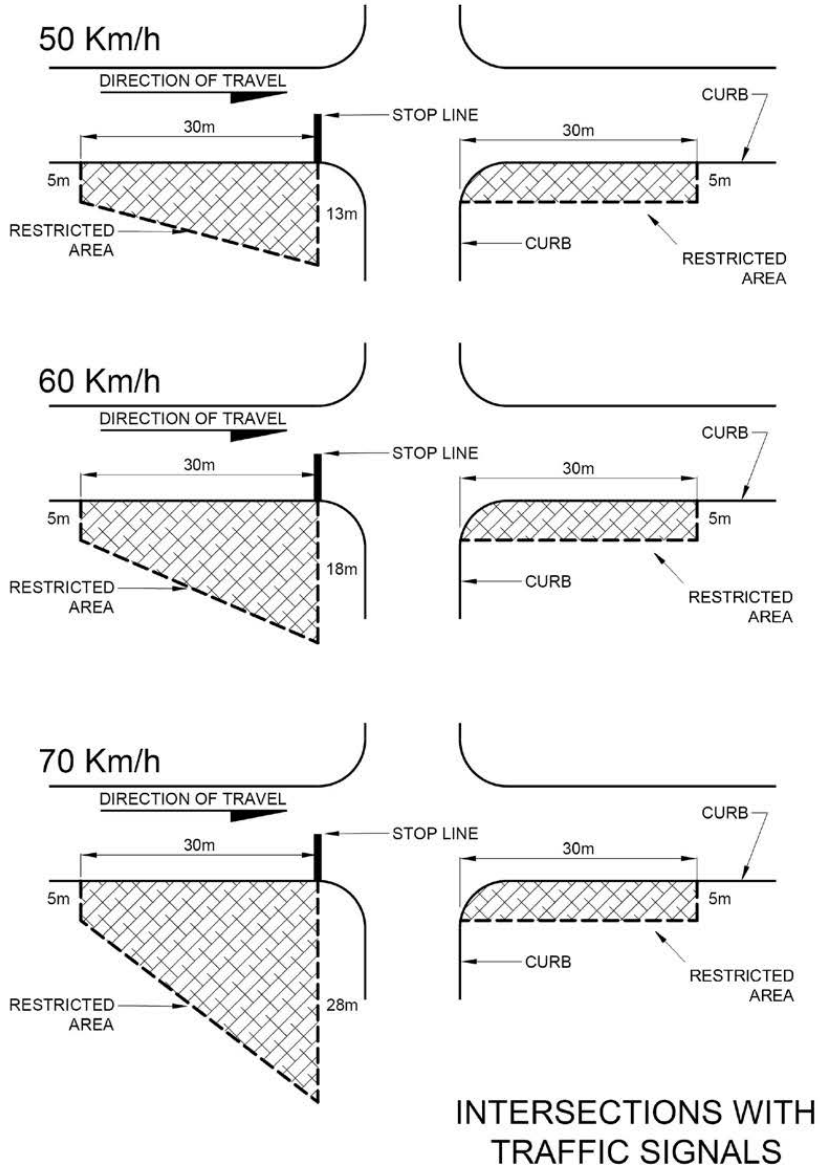

Illustration 18.1: Separation Distance From Intersections With Traffic Signals

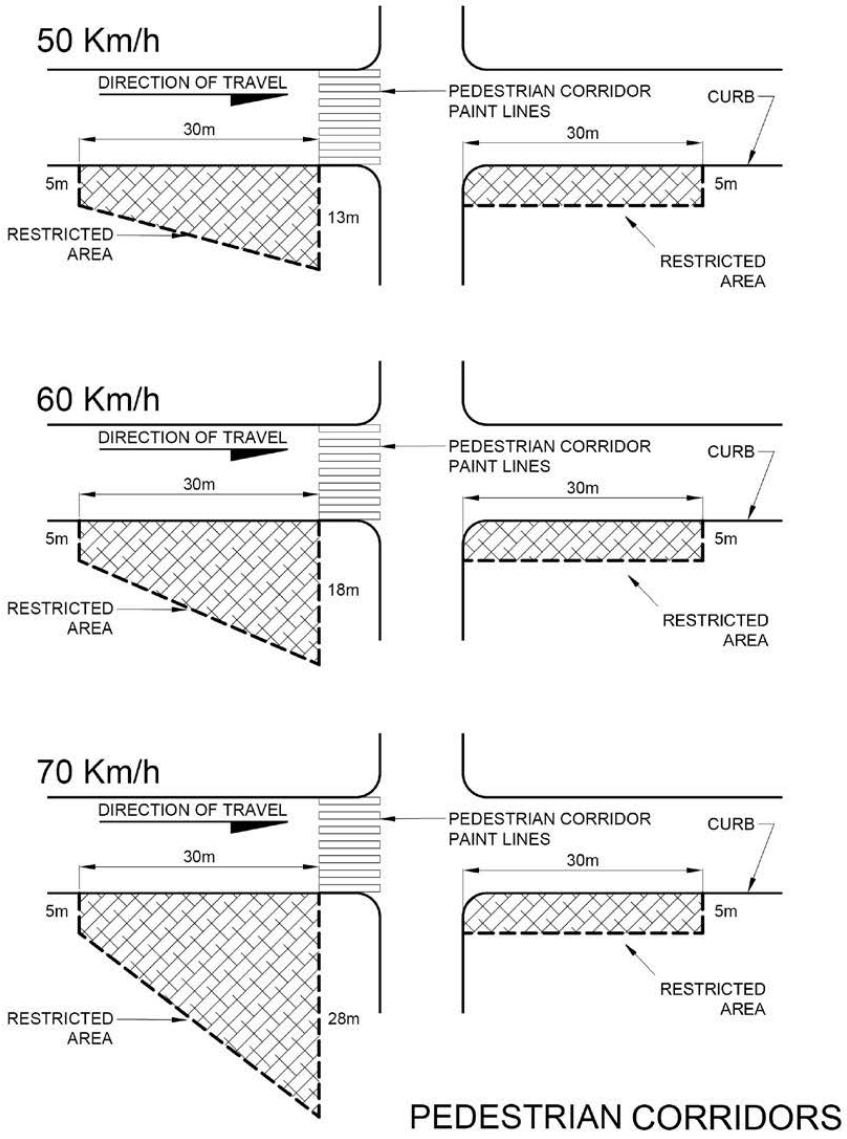

Illustration 18.2: Separation Distance From Pedestrian Corridors

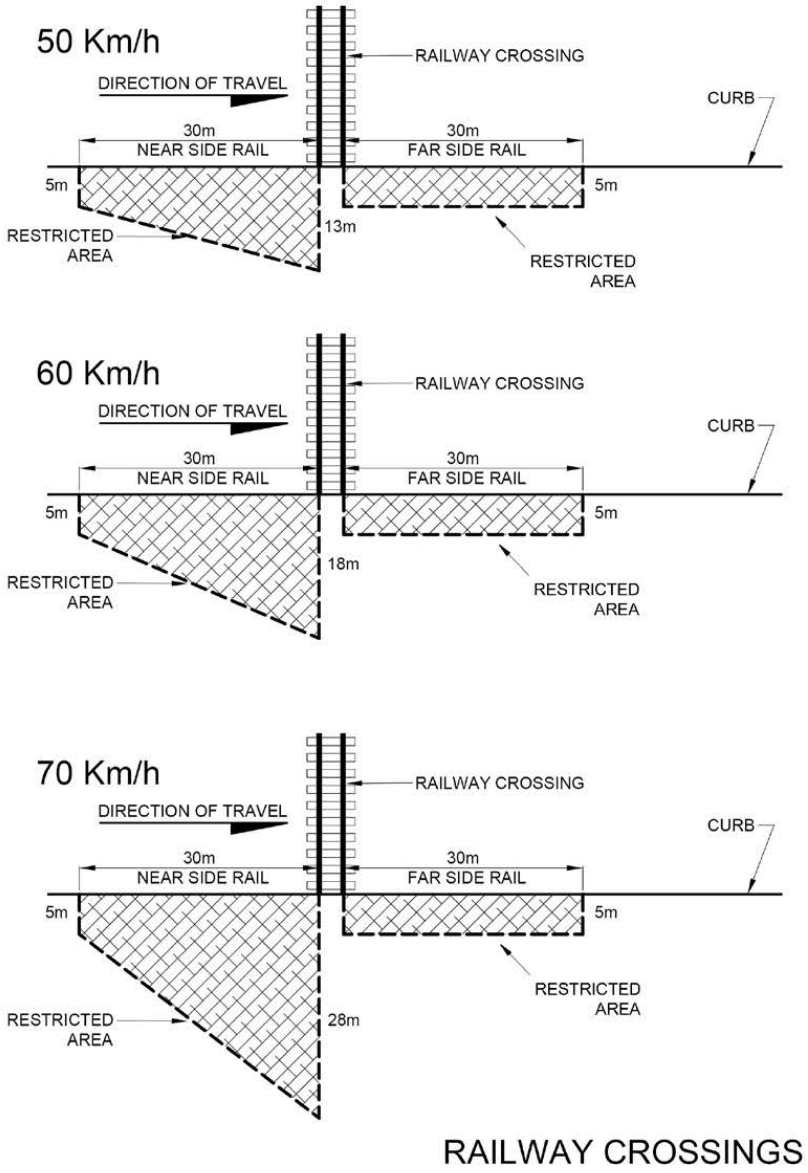

Illustration 18.3: Separation Distance From Railway Crossings

(12) *in clause 184(2)(e), by striking out* "an electronic message board" and substituting "a digital moving copy sign, a digital reader board, a digital static copy sign or a digital static copy, 24-hour hold sign".

(13) *by adding the following after subsection 184(9):*

"(10) Digital moving copy signs, digital reader boards, digital static copy signs and digital static copy, 24-hour hold signs are prohibited on mobile signs."

(14) *in Schedule G (Neighbourhood Main Streets PDO-1):*

in subsection 3(1), by striking out "Advertising sign" *and substituting* "Billboard, Digital Moving Copy/ Billboard, Digital Static Copy/ Billboard, Poster"

(15) *In Schedule M (Downtown Transcona PDO-1):*

(a) *in clause 4(3)(a), by striking out* "Advertising sign" *and substituting* "Billboard, Digital Moving Copy/ Billboard, Digital Static Copy/ Billboard, Poster;"

(b) *in clause 4(11)(a), by striking out* "Electronic message centre sign" *and substituting* "Digital moving copy signs, digital reader boards, digital static copy signs, and digital static copy, 24-hour hold signs;"

(c) *in clause 4(11)(b), by striking out* "animated"

(d) *in clause 5(3)(a), by striking out* "Advertising sign" *and substituting* "Billboard, Digital Moving Copy/ Billboard, Digital Static Copy/ Billboard, Poster;"

(e) *in clause 5(10)(a), by striking out* "Electronic message centre sign" *and substituting* "Digital moving copy signs, digital reader boards, digital static copy signs, and digital static copy, 24-hour hold signs;"

(f) *in clause 5(10)(b), by striking out* "animated"

(16) *In Schedule N (St. Norbert Main Street PDO-1):*

(a) *in clause 4(3)(a), by striking out* "Advertising sign" *and substituting* "Billboard, Digital Moving Copy/ Billboard, Digital Static Copy/ Billboard, Poster"

(b) *in clause 6(3)(a),* by striking out "Advertising sign" *and substituting* "Billboard, Digital Moving Copy/ Billboard, Digital Static Copy/ Billboard, Poster"

(17) In Schedule O (Academy Road Neighbourhood Main Street PDO-1):

(a) In clause 4.3(a), by striking out "Advertising sign" *and substituting* "Billboard, Digital Moving Copy/ Billboard, Digital Static Copy/ Billboard, Poster"; *and*

(b) in clause 4.10(a), by striking out "Electronic message centre sign" *and substituting* "Digital moving copy signs, digital reader boards, digital static copy signs, digital static copy, 24-hour hold signs;"

(18) In Schedule P (The Yards at Fort Rouge PDO-1):

in subsection 9(6), by striking out "billboard" *and substituting* "Billboards, Digital Moving Copy/ Billboards, Digital Static Copy/ Billboards, Poster".