**THE CITY OF WINNIPEG**

**BY-LAW NO. 36/2013**

**A By-law of The City of Winnipeg to amend Winnipeg Zoning By-law No. 200/2006 with respect to digital signs and billboards.**

**THE CITY OF WINNIPEG**, in Council assembled, enacts as follows:

1 *The Winnipeg Zoning By-law No. 200/2006 is amended*

*(1) in section 48:*

*(a) by adding the following definitions after the definition "bed and breakfast":*

**"billboard, digital moving copy"** means a sign or billboard with copy displayed utilizing electronic screens, televisions, computer video monitors, liquid crystal displays, light emitting diode displays, or any other electronic technology where the sign copy displays moving images, and which directs attention to a business, commodity, service, thing, message, or entertainment conducted, sold, or offered elsewhere than upon the same zoning lot on which that sign is located.

**"billboard, digital static copy"** means a sign or billboard capable of changing the message or copy on the sign electronically, where all the sign copy is fixed for a set period of time, and which directs attention to a business, commodity, service, thing, message, or entertainment conducted, sold, or offered elsewhere than upon the same zoning lot on which that sign is located.

**"billboard, poster"** means a sign or billboard that does not utilize digital message technology, and that directs attention to a business, commodity, service, thing, message, or entertainment conducted, sold, or offered elsewhere than upon the same zoning lot on which that sign is located.

*(b) by adding the following definition after the definition "animated sign":*

"**automatic dimming"** means technology that continually adjusts the brightness of a sign in relation to ambient light levels.

*(c) by adding the following definitions after the definition "copy area":*

"**digital moving copy"** means a sign with copy displayed utilizing electronic screens, televisions, computer video monitors, liquid crystal displays, light emitting diode displays, or any other electronic technology where the sign copy is not fixed for a set period of time.

**"digital reader board"** means a changeable copy sign that uses light emitting diodes. Messages are composed of an ordered sequence of alphanumeric characters on a black or dark background.

**"digital static copy"** means a sign with copy displayed utilizing electronic screens, televisions, computer video monitors, liquid crystal displays, light emitting diode displays, or any other electronic technology where all the sign copy is fixed for a set period of time.

**"digital static copy, 24-hour hold"** means a sign with copy displayed utilizing electronic screens, televisions, computer video monitors, liquid crystal displays, light emitting diode displays, or any other electronic technology where the sign copy is fixed for 24 hours through the use of a factory preset that is not adjustable to the user and cannot be altered without the assistance of the manufacturer.

(d) *by adding the following definition after the definition "free-standing sign":*

**"hold time"** means the length of time a sign message is fixed in place before changing to a different sign message.

(e) *by adding the following definition after the definition "sign surface area":*

**"transition time"** means the length of time it takes to change from one sign message to another.

(f) *by adding the following definition after the definition "towing and storage facility":*

**"traffic decision location"** means an area adjacent to one of the following:

(i) an intersection with traffic signals;
(ii) a pedestrian corridor; or
(iii) a railway crossing.

(2) *in section 48:*

(a) *in the definition "billboard sign", by striking out* "See advertising sign" *and substituting* "means the following:
(i) billboard, digital moving copy;
(ii) billboard, digital static copy; or
(iii) billboard, poster."

(b) *and in the definition "flashing sign", by striking out* "an electronic message centre" *and substituting* "a digital moving copy sign, a digital reader board, a digital static copy sign or a digital static copy, 24-hour hold sign".

*(c) by striking out the definitions* "advertising sign" and "electronic message board sign".

*(3) in subsection 59(3):*
*by adding the following after clause (d):*

(e) a Conditional Use Order to establish a billboard sign use expires 8 years from the date of the Order, unless the Order otherwise specifies.

*(4) in subsection 60(1):*
*in "signs uses", by striking out* "advertising signs and billboards" *and substituting* "billboard signs".

*(5) in Table 4-1: Principal Use Table:*
*(a) under Use Category/Type, by inserting "Billboard" before "Signs";*
*(b) under Use Category/Type "Signs", by striking out the row,* "Advertising sign*" and substituting the following rows:*

| | | | | | | | | | | | | | | | | | | | | | |
|---|---|---|---|---|---|---|---|---|---|---|---|---|---|---|---|---|---|---|---|---|---|
| Billboard, Digital Moving Copy* | | | | | | | | | | | | | | | | | | | | 98.1 | |
| Billboard, Digital Static Copy | | | | | | | | | | | | C* | C* | | | | C* | C* | C* | 98.1 | 0 |
| Billboard, Poster | | | | | | | | | | | | C* | C* | | | | C* | C* | C* | 98.1 | 0 |

*(6) by adding the following after section 98:*

***Billboard Signs***

98.1. All billboard signs must comply with the following standards:

***Height and Size***
(1) The height and size must not exceed the limits shown in Table 4-4 below:

**TABLE 4-4: Height and Size**

| Maximum Height (ft) | Maximum Sign Surface Area (sq ft) |
|---|---|
| 30<br>[Note a] | 200 |
| **Note a:** If the billboard sign is attached to a building or is free standing within 5 feet of a building, the maximum permitted height of the billboard sign is the height of the building wall. | |

***Roof Billboard Signs***

(2) No billboard sign is permitted on the roof of a building.

***Separation Distance From Other Uses***

(3) Placement (including separation distance from other uses) must comply with Table 4-5 below:

**TABLE 4-5: Placement Requirements**

| **Residential** | **Park, Plaza, Square, Playground/ Top of Riverbanks** | **Historic Buildings and Hospitals** [note c] |
|---|---|---|
| A billboard sign must not face an adjacent residential use unless the billboard sign is not visible from the adjacent residential use [note a] | There must be a minimum separation distance of 250 ft between a billboard sign and these uses unless the billboard sign is not visible from the Park, Plaza, Square, Playground/ Top of Riverbank | There must be a minimum separation distance of 150 ft between a billboard sign and a Historic Building or a Hospital unless the billboard sign is not visible from the Historic Building or Hospital.<br>A billboard sign must not be mounted on a Historic Building |

**Notes**:

a. If an existing billboard, digital moving copy or a billboard, digital static copy sign faces and is visible from an adjacent residential use which is established within 100 ft of the billboard, digital moving copy or billboard, digital static copy sign after the sign is put in place, the sign must be turned off from 10:00 PM to 7:00 AM every day of the week.

c. A Historic Building is a building on the "Buildings Conservation List" in the Historical Buildings By-Law.

***Separation Distance From Other Billboard Signs***

(4) A billboard, digital moving copy or a billboard, digital static copy sign must not be located closer than 500 ft from any other billboard sign which is on the same street and facing the same direction of traffic.

***Separation Distance From Traffic Decision Locations***

(5) A billboard, digital moving copy or a billboard, digital static copy sign must not be located within Restricted Areas as depicted in illustrations 9.1, 9.2, and 9.3.

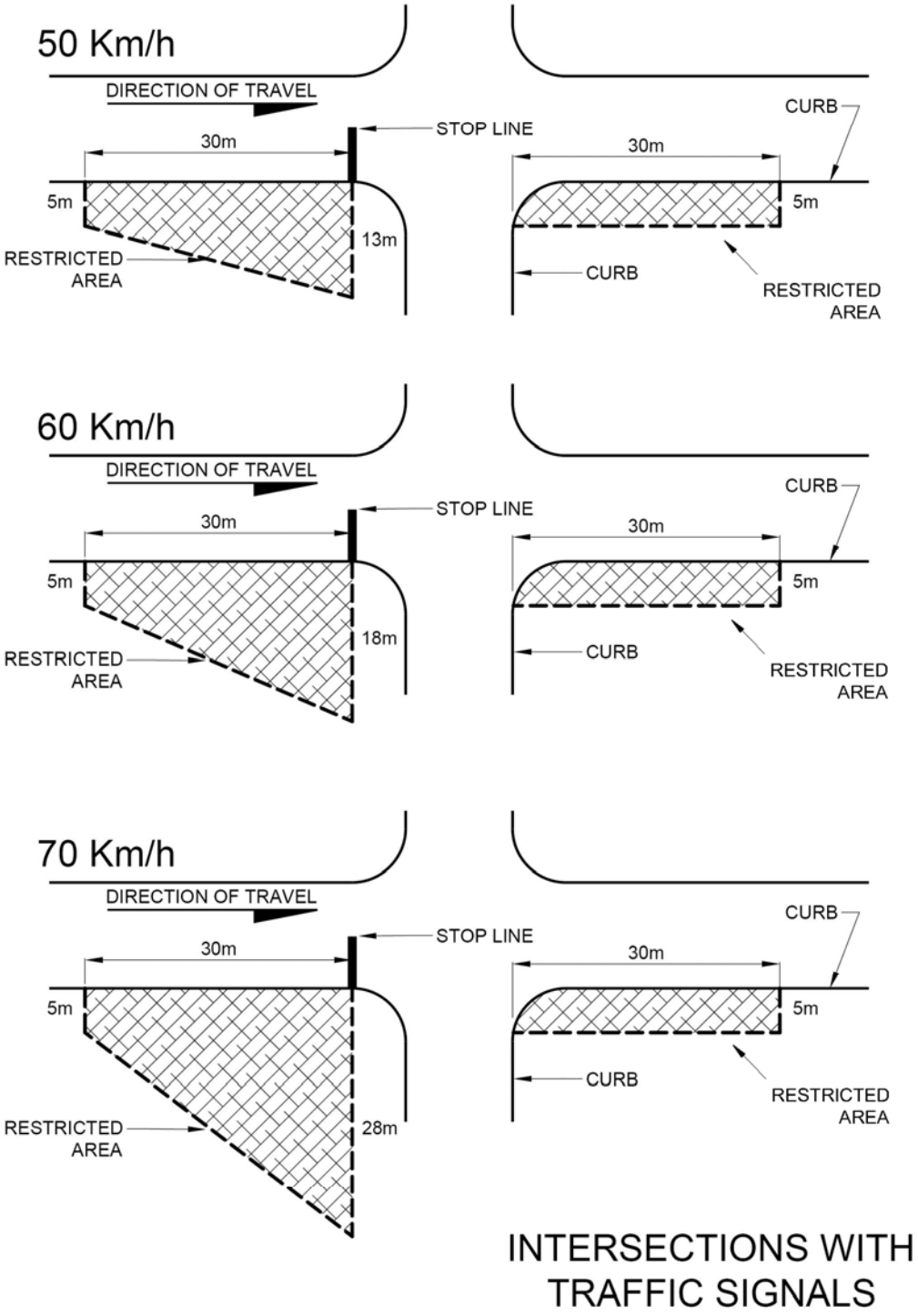


**Illustration 9.1: Separation Distance From Intersections With Traffic Signals**

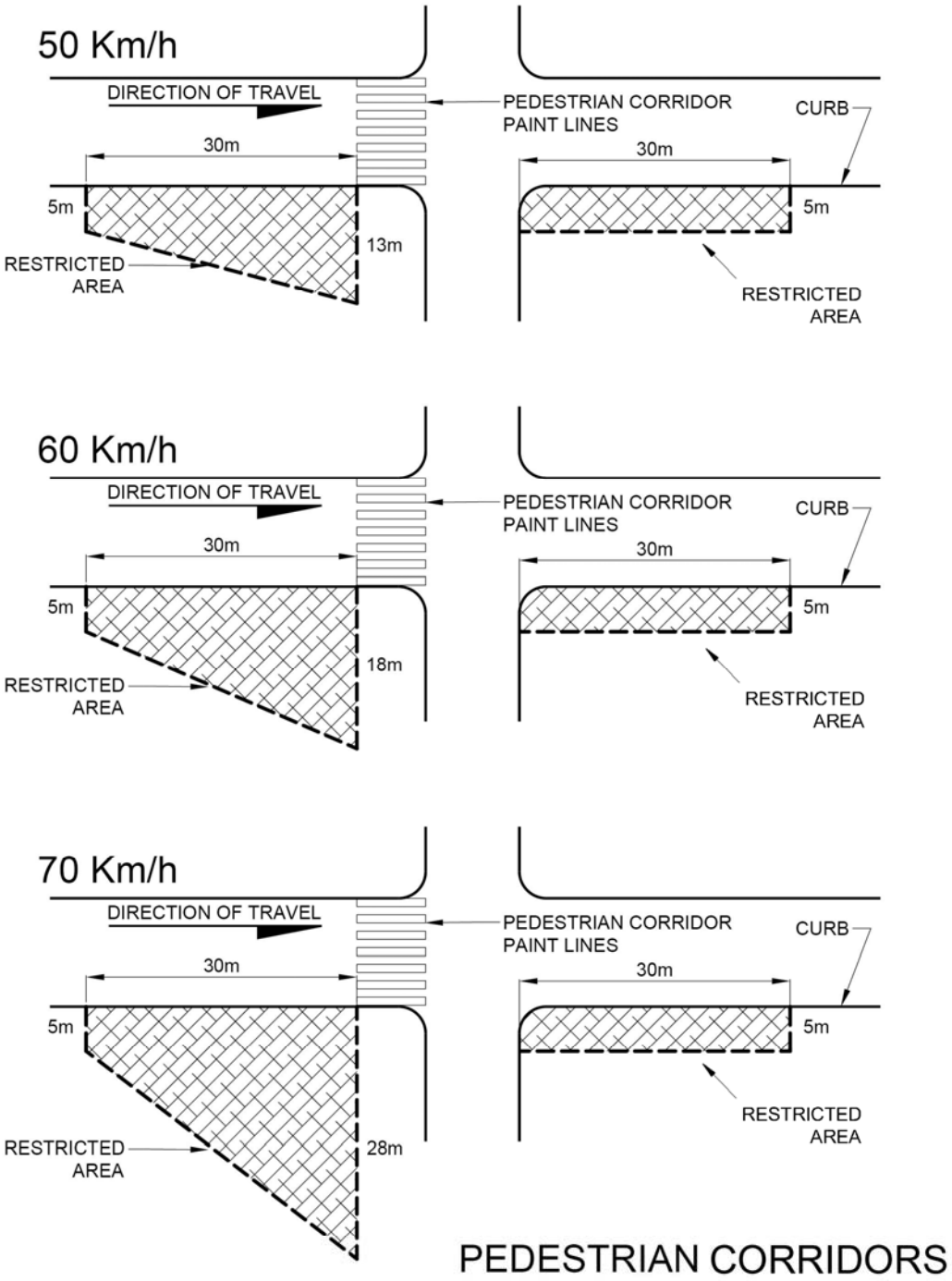


**Illustration 9.2: Separation Distance From Pedestrian Corridors**

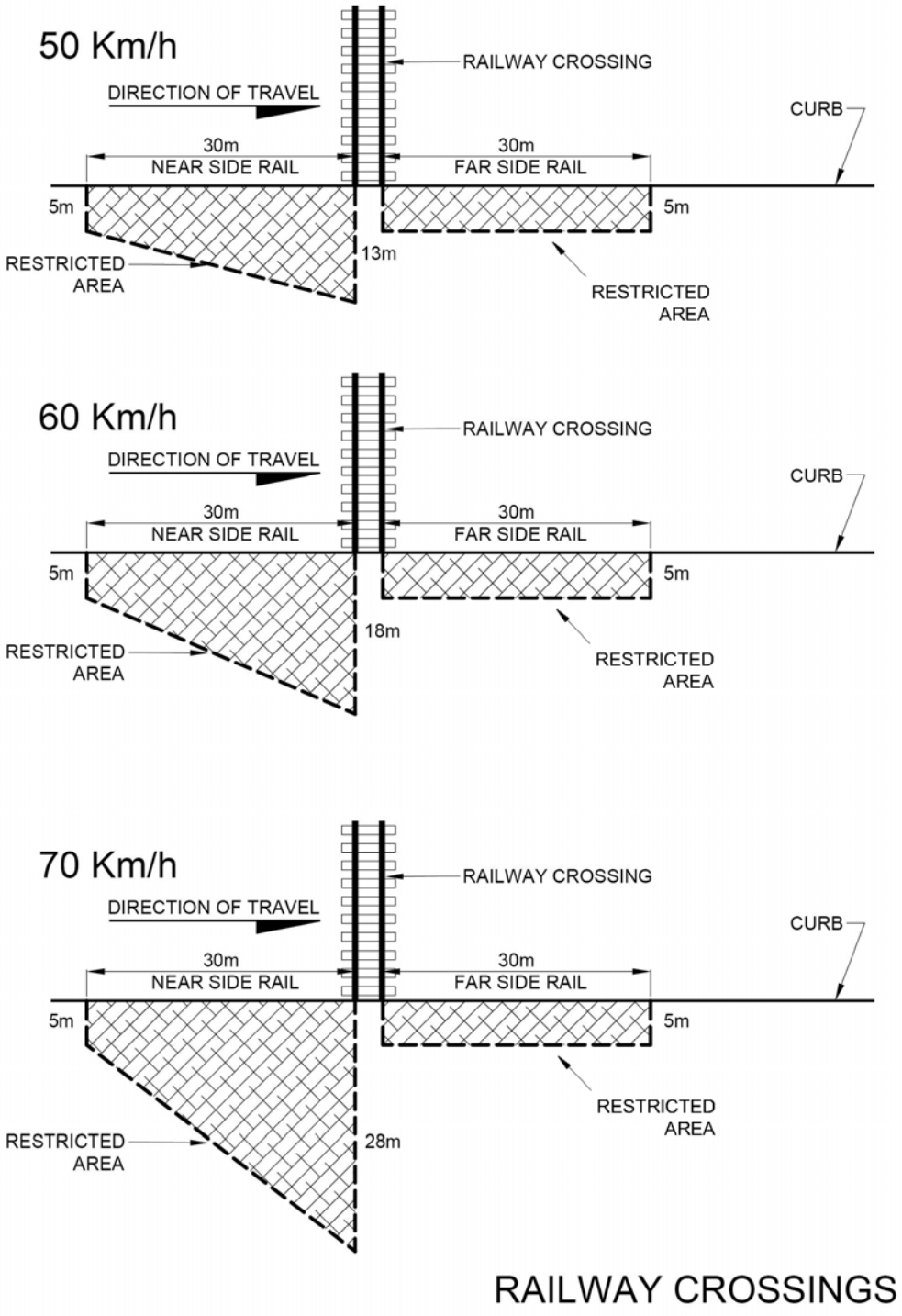


**Illustration 9.3: Separation Distance From Railway Crossings**

***Operational Standards***

(6) Billboard signs must comply with the following standards for the display of sign messages:

(a) must not display graphics which imitate or resemble any traffic control device;

(b) must have a minimum hold time of 6 seconds;

(c) must have a maximum transition time of .25 seconds;

(d) must not exceed a brightness level of .3 foot-candles above ambient light conditions;

(e) must utilize automatic dimming.

*(7) in section 161,Table 5-9: General Accessory Parking Requirements*

*(a) under Parking Category 0 by striking out* "Advertising Sign" and substituting "Billboard, Digital Moving Copy/ Billboard, Digital Static Copy/ Billboard, Poster"

*(8) in section 182, by striking out subsection (2) and substituting the following:*

***Flashing, Scintillating and Rotating Signs***

(2) (a) flashing signs, scintillating signs, rotating signs or beacons are not permitted in any zoning district except the C2, C3, C4, CMU, MMU, M1, M2 and M3, zoning districts.
(b) a Conditional Use Order is required for the erection of a flashing sign or scintillating sign that has copy height of more than 9 inches, or any rotating sign or beacon.
(c) flashing features, scintillating features, rotating features, and beacons are not permitted on mobile signs.

*(9) in subsection 183(2), by striking out* "Table 5-15" *wherever it occurs and substituting* "Table 5-15.1".

*(10) in Table 5-15:*

*(a) by striking out* "Table 5-15 wherever it occurs" *and substituting* "Table 5-15.1".

*(b) in Note c, by adding the words* "or digital reader board" *after* "board".

*(c) by adding the following after Note d:*

*e.* "Maximum size of digital static copy signs in all C2 PDO-1, PR, RMF, R, RMU, CMU, EI districts; and digital reader boards in C1, A districts, is 16 square feet."

*(11) by adding the following after* section 183*:*

**Digital moving copy signs, digital reader boards, digital static copy signs, and digital static copy, 24-hour hold signs**

183.1. The following standards apply to digital moving copy signs, digital reader boards, digital static copy signs, and digital static copy, 24-hour hold signs:

***District-Specific Regulations***

(1) All digital signs accessory to any use must be consistent with locations shown in Table 5-15.2.

**Table 5-15.2: Digital Accessory Sign Locations**

| District | Digital Reader Boards | Digital Static Copy Signs | Digital Moving Copy Signs |
|---|---|---|---|
| **C1, A** | Allowed | Not allowed | Not allowed |
| **C2, C3, C4, M1, M2, M3, MMU** | Allowed | Allowed | Not allowed |
| **CMU, EI, C2 PDO-1, RMU** | Allowed | Allowed | Not allowed |
| **PR, RMF, R** | Allowed [note a] | Allowed [note a] [note b] | Not allowed |

NOTES:
a. For schools, community centres, and religious institutions only.
b. Must be turned off from 10:00 PM to 7:00 AM every day of the week.

***Maximum Number of Signs***

(2) Maximum number of free-standing digital signs allowed per lot is 1, except in:
(i) C3 districts, where the maximum is 2; and
(ii) C4 districts, where the maximum is the greater of 1 per frontage or 2.

***Operational Standards***

(3) Digital moving copy signs, digital reader boards, digital static copy signs, and digital static copy, 24-hour hold signs must comply with the following standards for the display of sign messages:

(a) must not display graphics which imitate or resemble any traffic control device;

(b) must have a minimum hold time of 6 seconds except in all PR, RMF and R districts, where a hold time of 60 seconds is required;

(c) must have a maximum transition time of 0.25 seconds;

(d) must not exceed a brightness level of 0.3 foot-candles above ambient light conditions; and

(e) must utilize automatic dimming.

***Separation Distance From Traffic Decision Locations***

(4) (a) Digital moving copy signs, digital reader boards and digital static copy signs must not be located within Restricted Areas as depicted in illustrations 18.1, 18.2, and 18.3.

(b) A digital static copy, 24-hour hold sign must not be located within Restricted Areas as depicted in illustrations 18.1, 18.2, and 18.3 unless the Director of Public Works first provides written approval.

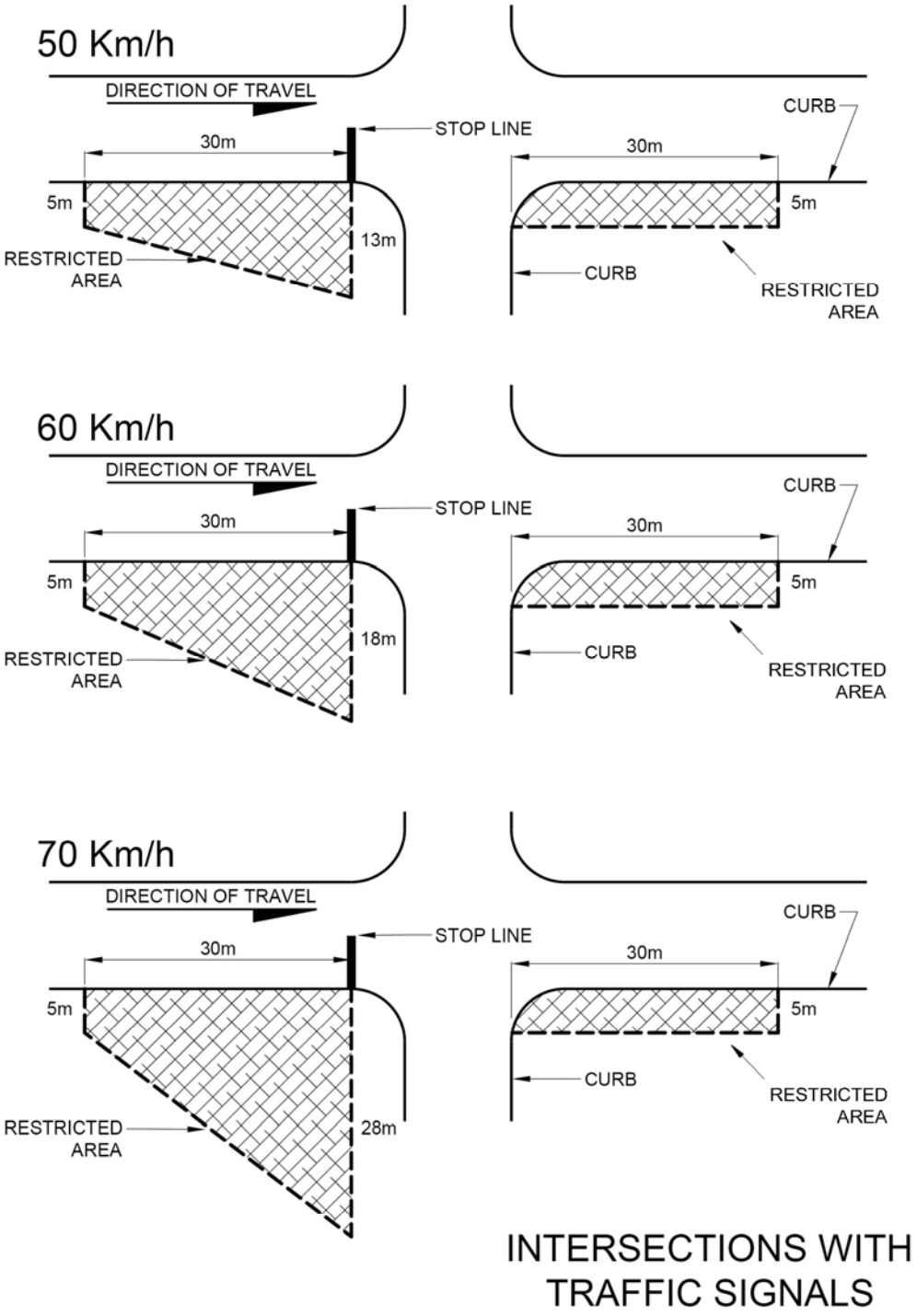


**Illustration 18.1: Separation Distance From Intersections With Traffic Signals**

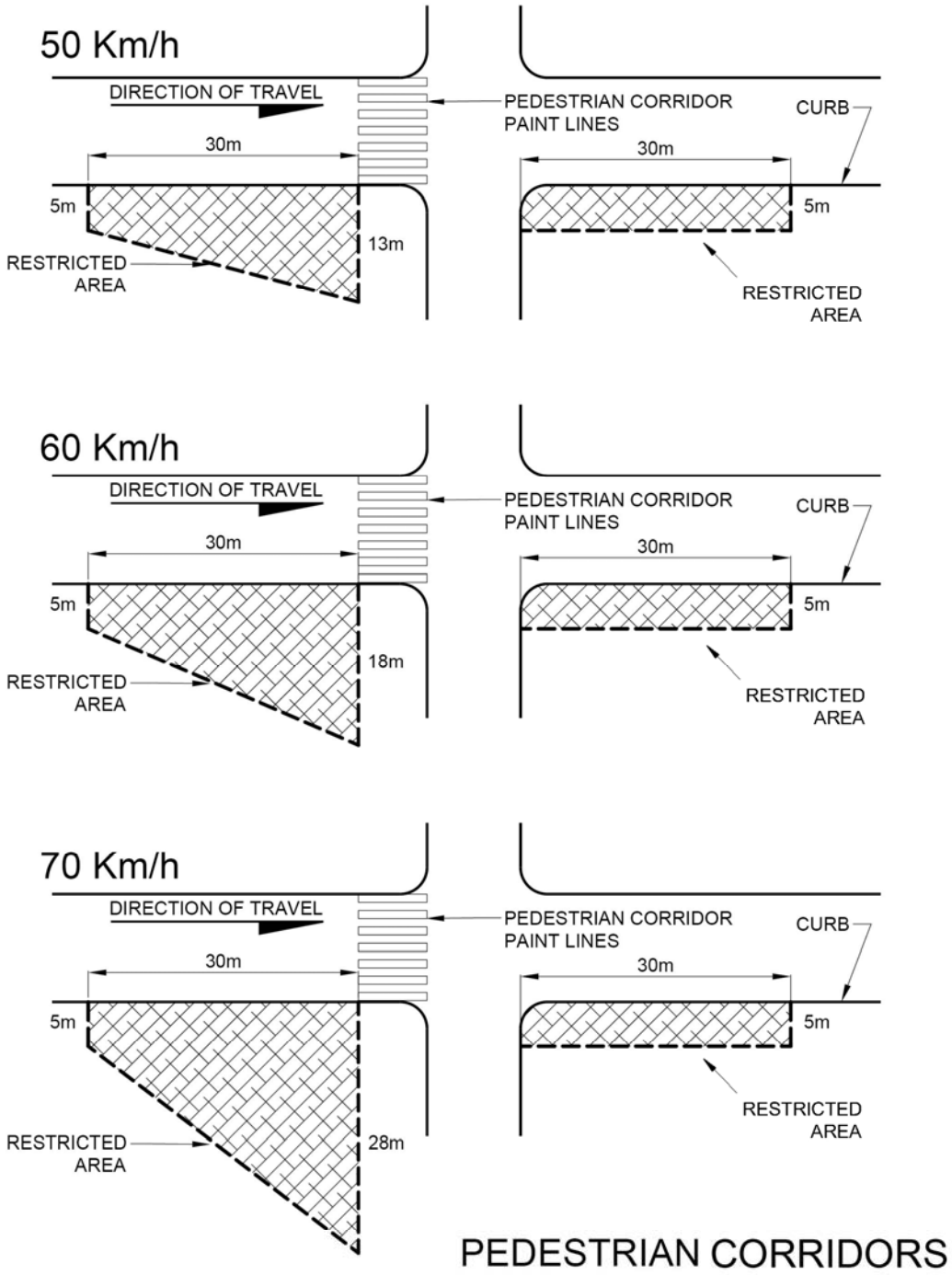


**Illustration 18.2: Separation Distance From Pedestrian Corridors**

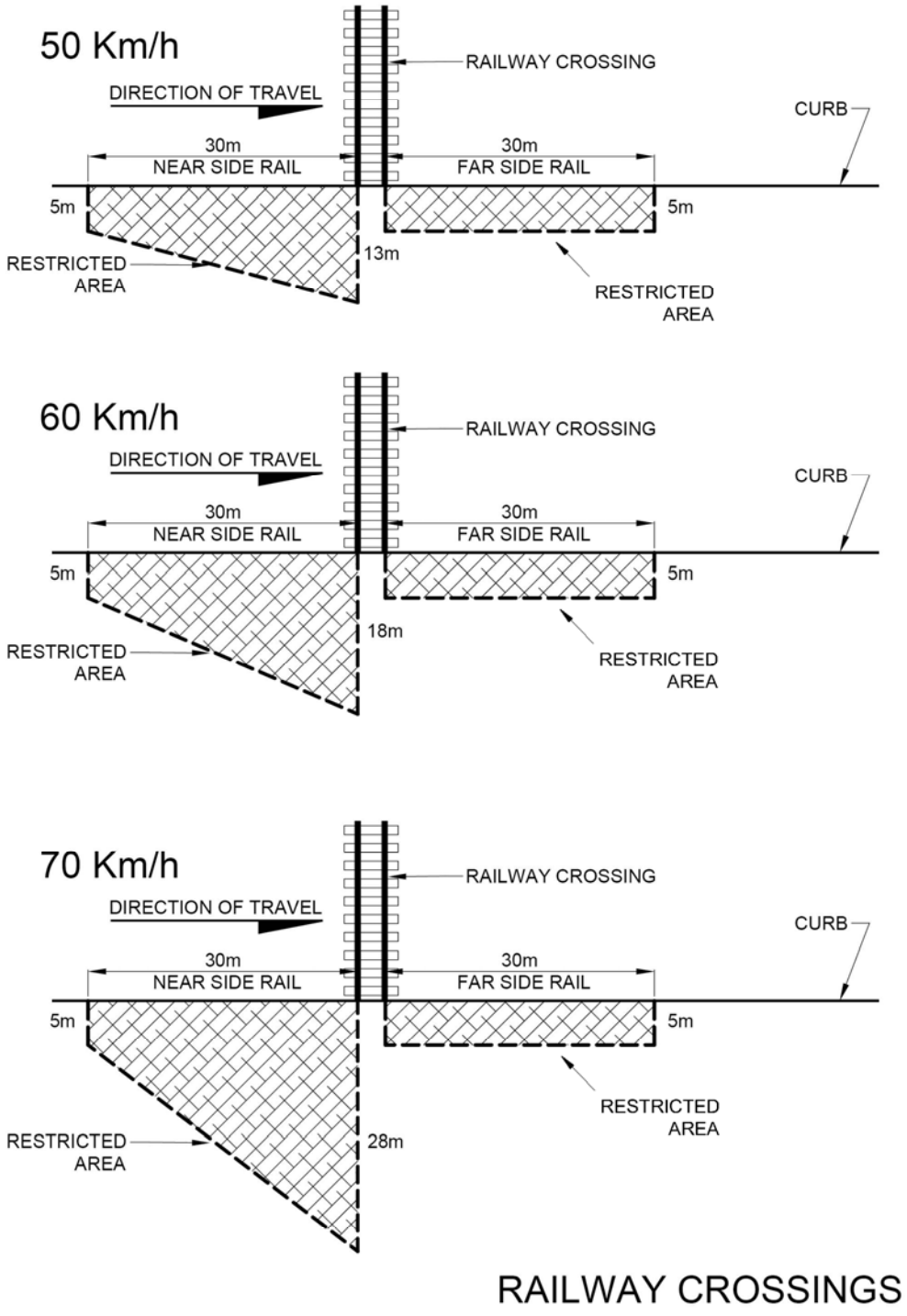


**Illustration 18.3: Separation Distance From Railway Crossings**

*(12)* *in clause 184(2)(e), by striking out* “an electronic message board” and substituting “a digital moving copy sign, a digital reader board, a digital static copy sign or a digital static copy, 24-hour hold sign”.

*(13)* *by adding the following after subsection 184(9):*

"(10) Digital moving copy signs, digital reader boards, digital static copy signs and digital static copy, 24-hour hold signs are prohibited on mobile signs.”

*(14)* *in Schedule G (Neighbourhood Main Streets PDO-1):*

*in subsection 3(1), by striking out* “Advertising sign” *and substituting* “Billboard, Digital Moving Copy/ Billboard, Digital Static Copy/ Billboard, Poster”

*(15)* *In Schedule M (Downtown Transcona PDO-1):*

*(a)* *in clause 4(3)(a), by striking out* “Advertising sign” *and substituting* “Billboard, Digital Moving Copy/ Billboard, Digital Static Copy/ Billboard, Poster;”

*(b)* *in clause 4(11)(a), by striking out* “Electronic message centre sign” *and substituting* “Digital moving copy signs, digital reader boards, digital static copy signs, and digital static copy, 24-hour hold signs;”

*(c)* *in clause 4(11)(b), by striking out* “animated”

*(d)* *in clause 5(3)(a), by striking out* “Advertising sign” *and substituting* “Billboard, Digital Moving Copy/ Billboard, Digital Static Copy/ Billboard, Poster;”

*(e)* *in clause 5(10)(a), by striking out* “Electronic message centre sign” *and substituting* “Digital moving copy signs, digital reader boards, digital static copy signs, and digital static copy, 24-hour hold signs;”

*(f)* *in clause 5(10)(b)*, *by striking out* “animated”

*(16)* *In Schedule N (St. Norbert Main Street PDO-1):*

*(a)* *in clause 4(3)(a), by striking out* “Advertising sign” *and substituting* **“**Billboard, Digital Moving Copy/ Billboard, Digital Static Copy/ Billboard, Poster”

*(b)* *in clause 6(3)(a),* by striking out “Advertising sign” *and substituting* “Billboard, Digital Moving Copy/ Billboard, Digital Static Copy/ Billboard, Poster”

*(17) In Schedule O (Academy Road Neighbourhood Main Street PDO-1):*

*(a) In clause 4.3(a), by striking out* "Advertising sign" *and substituting* "Billboard, Digital Moving Copy/ Billboard, Digital Static Copy/ Billboard, Poster"; *and*

*(b) in clause 4.10(a), by striking out* "Electronic message centre sign" *and substituting* "Digital moving copy signs, digital reader boards, digital static copy signs, digital static copy, 24-hour hold signs;"

*(18) In Schedule P (The Yards at Fort Rouge PDO-1):*

*in subsection 9(6), by striking out* "billboard" *and substituting* "Billboards, Digital Moving Copy/ Billboards, Digital Static Copy/ Billboards, Poster".

**DONE AND PASSED** this 24th day of April, 2013.

Mayor

City Clerk

Approved as to planning details:

*for* Director of Planning, Property and Development

Approved as to form:

James Carter
*for* Director of Legal Services and City Solicitor