Minute No. 721
Report – Executive Policy Committee – October 20, 2021

Item No. 7 Rezoning – 650 Union Avenue East
(Elmwood-East Kildonan Ward)
File DAZ 209/2021 [c/r DAV 153373/2021D]

COUNCIL DECISION:

Council concurred in the recommendation of the Executive Policy Committee and adopted the following:

1. That the Winnipeg Zoning By-law No. 200/2006 be amended under Development Application No. DAZ 209/2021 by rezoning the subject land to a "RMF-S" Residential Multi-Family (Small) District as shown on the map dated May 25, 2021 and attached as Schedule "A" to this report.

2. That the Developer shall meet all terms and conditions as outlined in Schedule "B", the report of the Administrative Coordinating Group, dated August 6, 2021 to the satisfaction of the Director of Planning, Property and Development.

3. That in lieu of the dedication of land, the Developer shall provide a cash payment in an amount equal to ten percent (10%) of the appraised value of the Development Application, as determined by the City's Director of Planning, Property and Development.

4. That this matter will be deemed to be concluded and all approvals in connection with this matter will expire if a by-law to implement this report (the "By-law") is not enacted within 2 years after the date on which this report is approved by Council unless the developer applies for an extension of time before the expiration of the 2-year period and Council approves the extension.

5. That upon instruction from the Director of Planning, Property and Development, the City Solicitor/Director of Legal Services shall prepare and bring directly to Council for enactment the By-law in accordance with the above.

6. That the Proper Officers of the City be authorized to do all things necessary to implement the intent of the foregoing.

7. That the variance order under File DAV 21-153373\D shall come into force and effect upon the coming into force and effect of the zoning by-law for the subject land under File DAZ 209/2021.

Report – Executive Policy Committee – October 20, 2021

DECISION MAKING HISTORY:

Moved by His Worship Mayor Bowman,

That the recommendation of the Executive Policy Committee be adopted by consent.

Carried

EXECUTIVE POLICY COMMITTEE RECOMMENDATION:

On October 20, 2021, the Executive Policy Committee concurred in the recommendation of the East Kildonan-Transcona Community Committee and submitted the matter to Council.

COMMUNITY COMMITTEE RECOMMENDATION:

On September 27, 2021, the East Kildonan-Transcona Community Committee concurred in the recommendation of the Winnipeg Public Service and, via the Priority Rezoning Process, submitted its recommendation to the Executive Policy Committee.

PUBLIC HEARING SUMMARY

File: DAZ 209/2021

Before: East Kildonan-Transcona Community Committee
Councillor Nason, Chairperson
Councillor Browaty
Councillor Schreyer

Public Hearing: September 27, 2021
Council Building, 510 Main Street

Applicant: Yevgeniy Yuldabayev

Subject:



Premises Affected: 650 Union Avenue East
For submission to: Executive Policy Committee

Prepared by: Tamara Pomanski, Committee Clerk
East Kildonan-Transcona Community Committee

Report date: September 27, 2021

Community Committee Recommendation:

On September 27, 2021, the East Kildonan-Transcona Community Committee concurred in the recommendation of the Winnipeg Public Service and, via the Priority Rezoning Process, recommended to the Executive Policy Committee:

1. That the Winnipeg Zoning By-law No. 200/2006 be amended under Development Application No. DAZ 209/2021 by rezoning the subject land to a "RMF-S" Residential Multi-Family (Small) District as shown on the map dated May 25, 2021 and attached as Schedule "A" to this report.

2. That the Developer shall meet all terms and conditions as outlined in Schedule "B", the report of the Administrative Coordinating Group, dated August 6, 2021 to the satisfaction of the Director of Planning, Property and Development.

3. That in lieu of the dedication of land, the Developer shall provide a cash payment in an amount equal to ten percent (10%) of the appraised value of the Development Application, as determined by the City's Director of Planning, Property and Development.

4. That this matter will be deemed to be concluded and all approvals in connection with this matter will expire if a by-law to implement this report (the "By-law") is not enacted within 2 years after the date on which this report is approved by Council unless the developer applies for an extension of time before the expiration of the 2-year period and Council approves the extension.

5. That upon instruction from the Director of Planning, Property and Development, the City Solicitor/Director of Legal Services shall prepare and bring directly to Council for enactment the By-law in accordance with the above.

6. That the Proper Officers of the City be authorized to do all things necessary to implement the intent of the foregoing.

7. That the variance order under File DAV 21-153373\D shall come into force and effect upon the coming into force and effect of the zoning by-law for the subject land under File DAZ 209/2021.

The East Kildonan-Transcona Community Committee provided the following supporting reasons for its recommendation:

1. It essentially can be considered a nominal change consistent with the buildings along that street, both in front of it and behind it. Given its location on a bus route, given the adequate notice as well as communication with the neighbours in the immediate vicinity. Given that there is no shown opposition at this hearing, given all that, I believe this is an adequate application for this development.

Exhibits Filed:

1. Application dated May 21, 2021
2. Notification of Public Hearing dated July 15, 2021
3. Manitoba Status of Title 3080648/1

4. Letter of authorization dated April 14, 2020 from Yevgeniy Yuldabayev to Yevgeniy Yuldabayev
5. Plans (10 pages)
6. Report from the Urban Planning Division dated September 15, 2021
7. Inspection Report

REPRESENTATIONS:

In Support:

Boris Mednikov
Yevgeniy Yuldabayev

In Opposition:

Nil

For Information:

Nil

For the City:

F. Ojo, Planner, Planning, Property and Development Department

Exhibit "6" referred to in File DAZ 209/2021

ADMINISTRATIVE REPORT

Title: DAZ 209/21 – 650 Union Avenue E

Issue: An application for consideration at the public hearing to rezone the property from an "R1-S" Residential Single-Family (Small) District to "RMF-S" Residential Multi-Family (Small) District to facilitate the construction of a 2-storey, four (4) unit multi-family dwelling.

Critical Path: East Kildonan - Community Committee – Standing Policy Committee on Property and Development – Executive Policy Committee – Council as per the *Development Procedures By-Law and The City of Winnipeg Charter.*

AUTHORIZATION

Author	Department Head	CFO	CAO
Femi Ojo, MCIP, RPP	N/A	N/A	

RECOMMENDATIONS

1. That the Winnipeg Zoning By-law No. 200/2006 be amended under Development Application No. DAZ 209/2021 by rezoning the subject land to a "RMF-S" Residential Multi-Family (Small) District as shown on the map dated May 25, 2021 and attached as Schedule "A" to this report.
2. That the Developer shall meet all terms and conditions as outlined in Schedule "B", the report of the Administrative Coordinating Group, dated August 6, 2021 to the satisfaction of the Director of Planning, Property and Development.
3. That in lieu of the dedication of land, the Developer shall provide a cash payment in an amount equal to ten percent (10%) of the appraised value of the Development Application, as determined by the City's Director of Planning, Property and Development.
4. That this matter will be deemed to be concluded and all approvals in connection with this matter will expire if a by-law to implement this report (the "By-law") is not enacted within 2 years after the date on which this report is approved by Council

unless the developer applies for an extension of time before the expiration of the 2-year period and Council approves the extension.

5. That upon instruction from the Director of Planning, Property and Development, the City Solicitor/Director of Legal Services shall prepare and bring directly to Council for enactment the By-law in accordance with the above.
6. That the proper Officers of the City be authorised to do all things necessary to implement the intent of the foregoing.
7. That the variance order under File DAV 21-153373\D shall come into force and effect upon the coming into force and effect of the zoning by-law for the subject land under File DAZ 209/202.

REASON FOR THE REPORT

- The applicant is proposing to rezone the property from an “R1-S” Residential Single-Family (Small) District to a “RMF-S” Residential Multi-Family (Small) District.
- The intent is to construct a four (4) unit, 2 storey multi-family development on a property that is being rezoned to “RMF-S” zoning district.
- Rezoning applications require a Public Hearing as per the *Development Procedures By-law* and *The City of Winnipeg Charter.*
- The Report is being submitted for the Committee’s consideration of the development application at the Public Hearing.

IMPLICATIONS OF THE RECOMMENDATIONS

- If the recommendations of the Urban Planning Division are concurred in, the rezoning for DAZ 209/2019 will be approved.

HISTORY

N/A

CONSULTATION

In preparing this report there was consultation with:
- Land Development Branch
- Water and Waste Division
- Zoning and Permit Branch

OURWINNIPEG POLICY ALIGNMENT

01 Area of Stability – Key Direction:

- Enhance the quality, diversity, completeness and sustainability of stable neighbourhoods and expand housing options for Winnipeg's changing population.

WINNIPEG CLIMATE ACTION PLAN ALIGNMENT

Strategic Opportunity #4:

- Facilitate Compact, Complete Development and Increase Density.
- 4.2: Ensure New Areas of Growth Are Designed according to the Principles of Complete Communities.

SUBMITTED BY

Department	Planning, Property and Development
Division	Urban Planning Division
Prepared by:	Femi Ojo, MCIP, RPP
Date:	September 15, 2021
File No.	DAZ 209/2021

List of Schedules and Attachments

1. Appendix A – Planning Discussion
2. Schedule "A" for File No. DAZ 209/21, East Kildonan – Transcona Community Committee, dated May 25, 2021.
3. Schedule "B", Report of the Administrative Co-ordinating Group – August 6, 2021. Re: Proposed Rezoning of Land Located at 650 Union Avenue W – File DAZ 209/2021.

APPENDIX 'A'

DATE: September 15, 2021

FILE: **DAZ 209/2021**
RELATED FILES: DAV 21-153373/D

COMMUNITY: East Kildonan - Transcona
NEIGHBOURHOOD #: 4.403 (Talbot-Grey)

SUBJECT: To rezone the subject land from "R1-S" Residential Single-Family (Small) District to "RMF-S" Residential Multi-Family (Small) District.

LOCATION: 650 Union Avenue E

LEGAL DESCRIPTION: SP LOT 64 PLAN 29580 WLTO IN RL 46 AND 47 PARISH OF ST JOHN

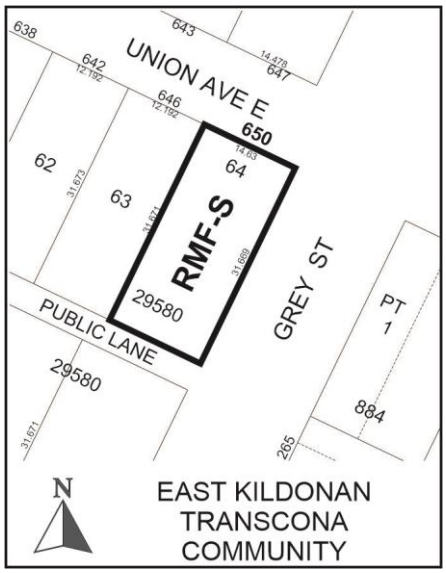

APPLICANT: Yevgeniy Yuldabayev
1392 Ravelston Avenue W
Winnipeg, MB R3W 1R1

OWNER: Yevgeniy Yuldabayev
650 Union Avenue E
Winnipeg, MB, R2L 1A4

RECOMMENDATION: Approval

SITE DESCRIPTION

- The subject property is located on the south west corner of Union Avenue E and Grey Street in the Talbot-Grey neighbourhood of the Elmwood – East Kildonan Ward.
- Currently on the property is a one storey single-family dwelling that was built in 1945 and has a building area of 798 square feet. All existing structures on site will be demolished.
- The property is 47 feet wide and +/- 104 feet deep; providing a total lot area of +/- 4,983 square feet.
- The subject property falls within the Area of Stability – Mature Community Policy Area of the *Complete Community Direction Strategies*. The property is zoned "R1-S" Residential Single-Family Small.



Figure 1: Aerial photograph showing subject property (flown 2018)

SURROUNDING LAND USES & ZONING (See Figure 2)

North: Union Avenue E, then residences zoned “R1-S” Residential Single-Family Small.

South: Backlane, then a 4-unit residential building and a single-family residence zoned “C1” Commercial Neighbourhood.

East: Grey Street, then George V School zoned “PR2” Parks and Recreation Community.

West: Residences zoned “R1-S” Residential Single-Family Small.

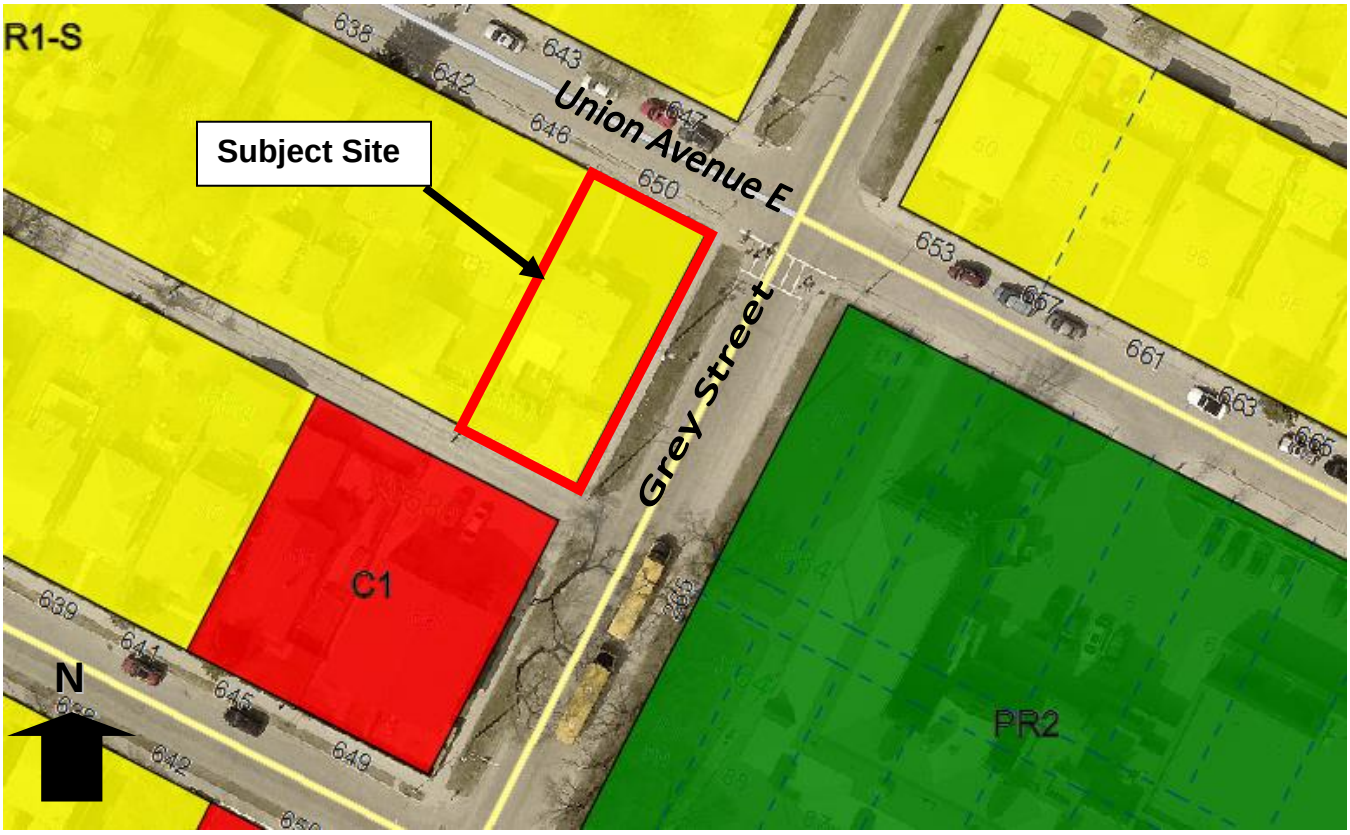

Figure 2: Zoning of the surrounding area.

DESCRIPTION OF THE PROPOSED DEVELOPMENT

- The applicant intends to demolish the existing single-family dwelling and rezone the property to an “RMF-S” Residential Multi-Family (Small) district in order to construct a multi-family building containing 4 dwelling units with accessory parking area with 5 stalls

- As noted in the associated Administrative Report under File DAV 21-153373/D, variances have been requested to accommodate aspects of the proposal and a report has been submitted for consideration in conjunction with this application. Please, refer to the related Administrative Report for analysis on the variance application.

- Submitted plans show that the proposed multi-family building would be two-storey in height (+/- 28 feet in height). Two entrances will be facing the street on Union Avenue E.
- The accessory parking area containing 5 parking stalls, including one (1) accessible parking stall, would be located behind the proposed multi-family building.

COLLABORRATIVE PLANNING & CONSULTATION

The applicant contacted with the Urban Planning Division during the preliminary stage of the development and the following issues were discussed;

Number of Units

The Urban Planning Division indicated support for a fourplex provided the building design is context sensitive to the surrounding single-family residential homes.

Water and Waste

The applicant was asked to confirm the adequacy of existing water and waste infrastructure in the area with Water and Waste Department. There are no concerns from the Water and Waste Department given the number of units being proposed.

Public Engagement

The Urban Planning Division had advised the applicant to consult with the area resident. The applicant had indicated willingness to engage the surrounding residents.



Figure 3: Proposed Site Plan



Figure 4: Photo Rendering of The Subject Proposal

ANALYSIS AND ISSUES

OUR WINNIPEG AND COMPLETE COMMUNITIES DIRECTION STRATEGY

The subject site is in an “Areas of Stability” policy area of *OurWinnipeg* and *Complete Communities.* The Key Direction in these documents that applies to Areas of Stability states: “Enhance the quality, diversity, completeness and sustainability of stable neighbourhoods and expand housing options for Winnipeg’s changing population.”

Under the *Complete Communities Direction Strategy*, relevant policies for Areas of Stability that apply directly to the proposed multi-family use include:

- *Support low to moderate change in low-density neighbourhoods through development and redevelopment that is complementary to the existing scale, character and built form;*

  The establishment of a fourplex on this block of Union Avenue E is a moderate density change that is consistent with the policy above (see “Compatibility and Planning discussion for more information.

- *Promote the form of buildings and spaces that are sensitive to the community context and address the transition between new and existing developments;*

  The scale and form of the subject proposal (being a 4 unit, two-storey building) is compatible with the immediate surrounding structures.

- *Focus housing growth to areas that have municipal service capacity to support intensification, in addition to commercial and recreational amenities;*

  The subject property falls within the Area of Stability-Mature Community; policies of which support minor - moderate intensification because of existing municipal services.

- *Support Complete Communities by ensuring diverse and high-quality housing stock;*

  The proposal to establish four (4) new residential units on Union Avenue E provides new housing stock within the neighbourhood.

The subject proposal would add to the variety of housing types in the neighbourhood in a manner that is compatible with and complimentary to surrounding properties in terms of building massing, scale and built form.

In addition, the proposed development would contain sufficient parking supply, which would be located behind the proposed building, in a manner that mitigates any potential impact on the surrounding area.

Thus, the proposed rezoning and the establishment of a fourplex in this location is generally consistent with the *Complete Communities Direction Strategy of OurWinnipeg.*

ZONING AND LAND USE BY-LAW 200/2006

Existing Zoning

- **R1-S Residential Single-Family (Small) -** is intended to accommodate primarily single-family residential development in lower density areas.

Proposed Zoning

- **RMF-S Residential Multi-Family (Small) -** is intended to accommodate the development of multi-family units in areas with medium to high residential densities.

Rezoning (DAZ 209/2021)

- The applicant is proposing to rezone the land from “R1-S” to “RMF-S” for the establishment of a 4-unit multi-family development. As per the Winnipeg Zoning

By-Law Principal Use table, multi-family dwellings are not permitted in the “R1” zoning district.

- Rezoning the subject site to “RMF-S” will ensure that the subject proposal complies with the Winnipeg Zoning By-Law 200/2006.

Variances (see DAV 21-153373/D)

- The applicant has applied for five (5) variances to facilitate the proposal. These variances relate to reduced lot area, density, setbacks, landscaping and the accessory parking area.
- This Administrative Report only speaks to issues relating to the rezoning of the subject property. Further discussion relating to the variance is addressed in associated Administrative Report for the variance.

COMPATIBILITY WITH SURROUNDING USES

- The proposed rezoning of the subject property to “RMF-S” Residential Multi-Family Small will be compatible with the area and is unlike to pose any detrimental effect on existing surrounding properties for the following reasons:
    - The subject property falls within the Area of Stability of *Complete Communities Direction Strategy* which supports low to moderate change in low-density neighbourhoods through developments and redevelopments that is complementary to the existing scale, character and built form. The proposed “RMF-S” zoning and the future construction of a four-unit residential dwelling on the lot is consistent with the above policy.
    - The property to the south (649 Chalmers Avenue) is zoned “C1” and contains 4 dwelling units, which is consistent with what the applicant is proposing.
    - It is also important to note that the subject site is a corner lot where moderate intensification is encouraged.
    - The overall intensity of the proposed development, in terms of density, built form and scale is considered compatible, and unlikely to cause any adverse effect on the use, safety, and convenience of the adjoining properties and adjacent area.
- Thus, the Urban Planning Division recommends approval of the subject application, subject to one condition.

ADDITIONAL CONSIDERATIONS:

Small Scale and Low-Rise Residential Development Guidelines for Mature Communities

- The Small Scale and Low-Rise Residential Development Guidelines for Mature Communities were approved as Council Policy on June 24, 2021.
- The application was submitted to the Urban Planning Division for comment and review prior to the adoption of the *Infill Guidelines*.
- The Urban Planning Division had provided a supportive recommendation for the proposed fourplex at 650 Union Avenue E prior to the adoption of the *Infill Guidelines.*
- Given the aforementioned, the Infill Guidelines have not been applied to the subject application.
- Despite this application not being formally subject to the infill Guidelines, the proposal does adhere to a number of *Infill Guideline* policies.
    - The property has access to rear lane.
    - The proposed dwelling is approximately +/- 28 feet tall.
    - The proposed development employs four (4) foot side yards on both sides.
    - The proposed front yard setback of 15 feet meets the front yard alignment.
    - A rear yard setback of 30 feet is provided.
    - The proposal shows varied roof articulation.
    - Building facades use a mix of high-quality cladding materials and architectural details, which include projections/recess of wall planes.
- The subject proposal meets most of the preferred location criteria of the *Infill Guideline.*
    - The subject property abuts a lane.
    - It's a corner lot.
    - The site is located within 2,625 ft. of a Primary Transit Network.
    - The property abuts a non-residential use to the east

KEY COMMENT PROVIDED BY OTHER CIVIC DEPARTMENTS

- It is noted that the subject DAZ application (209/2021) has been reviewed by civic departments through the Administrative Coordinating Group (ACG).

- This review process is used to determine developer obligations such as servicing requirements, land dedication and other considerations.
- The ACG Report in this instance outlined servicing considerations that needs to be met as part of the DAZ 209/2021 approval.

LAND DEDICATION

- When a developer rezones and/or subdivides a parcel of land, they are required to file an application with the City of Winnipeg.
- As a condition of rezoning or subdivision, a developer is required to contribute a portion of the land to be developed to the City for parks purposes of not less than 10%; OR
- The Public Service is recommending 'cash in lieu' with respect to this application.

RECOMMENDATION

The Urban Planning Division recommends **approval** for the following reasons:

- The rezoning of subject land from "R1-S" Residential Single-Family Small to "RMF-S" Residential Multi-Family Small aligns with the policies in the *Complete Communities Direction Strategy* for Areas of Stability – Mature Communities;
    - *Support low to moderate change in low-density neighbourhoods through development and redevelopment that is complimentary to the existing scale, character and built form.*
- The proposal is consistent and compatible with the surrounding properties given that;
    - The massing and scale of the subject proposal is consistent with an existing fourplex within the immediate vicinity at 649 Chalmers Avenue.

This Report Submitted by:
Planning, Property and Development Department
Planning and Land Use Division
Report Prepared By: Femi Ojo, MCIP, RPP
PPD File # DAZ 209/2021

Schedule "A" for File No. DAZ 209/2021, East Kildonan - Community Committee, dated May 25, 2021

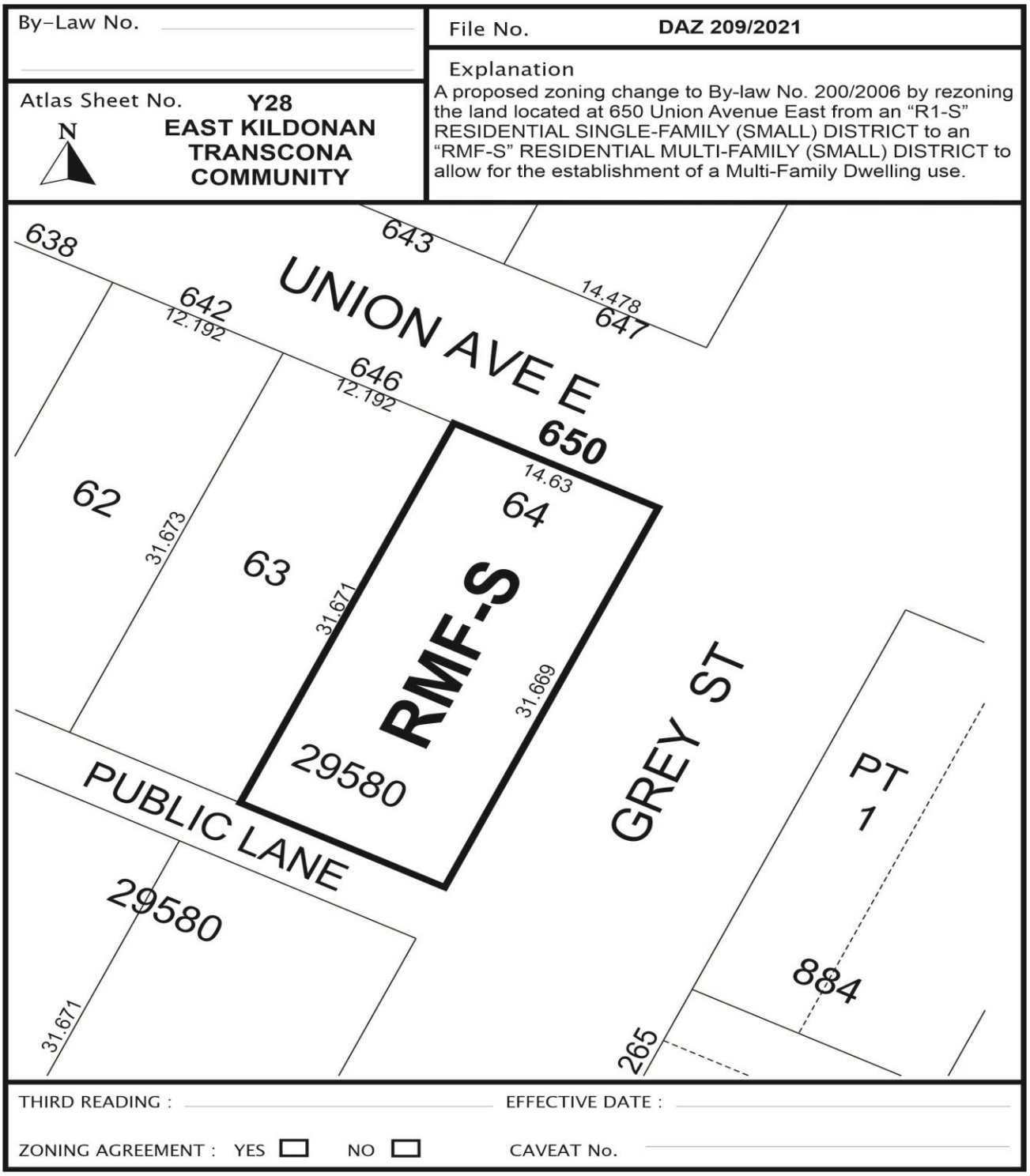

SCHEDULE B

REPORT OF THE ADMINISTRATIVE COORDINATING GROUP

RE: PROPOSED REZONING OF LAND LOCATED AT 650 UNION AVENUE EAST

The Administrative Coordinating Group (ACG) reviewed the servicing requirements for DASZ 209/2021. The Developer should take into consideration the following servicing and design requirements and considerations in the redevelopment of the site:

Section I - Servicing Considerations

1) Combined Sewer District

The proposed development is located in a combined sewer district; the sum of the wastewater and land drainage runoff peak discharge from the proposed development cannot exceed the allowable discharge rate:

i. The allowable discharge rate will be the sum of the existing peak wastewater and the peak land drainage discharged.

ii. The peak land drainage discharged from the site must be based on a c-value of 0.35, with a 5 year rainfall event applied.

iii. The existing and proposed peak wastewater discharge must be estimated using the Wastewater Flow Estimation guidelines found on the City of Winnipeg website (http://winnipeg.ca/waterandwaste/dept/wastewaterFlow.stm), unless otherwise approved.

THIS REPORT SUBMITTED BY:

Administrative Co-ordinating Group
File No. DAZ 209/2021
August 6, 2021

"*Original Signed by D. Trenchard"*
D. Trenchard, P. Eng.
Land Development Branch
Planning, Property and Development Department

"*Original Signed by M. Gajda"*
M. Gajda, P. Eng.
Engineering Division
Water and Waste Department

Exhibit "5" referred to in File DAZ 209/2021



Four-Plex

650 Union Avenue East
Winnipeg, Manitoba

ALEKSANDR OLIVSON
ARCHITECT, MAA, MRAIC

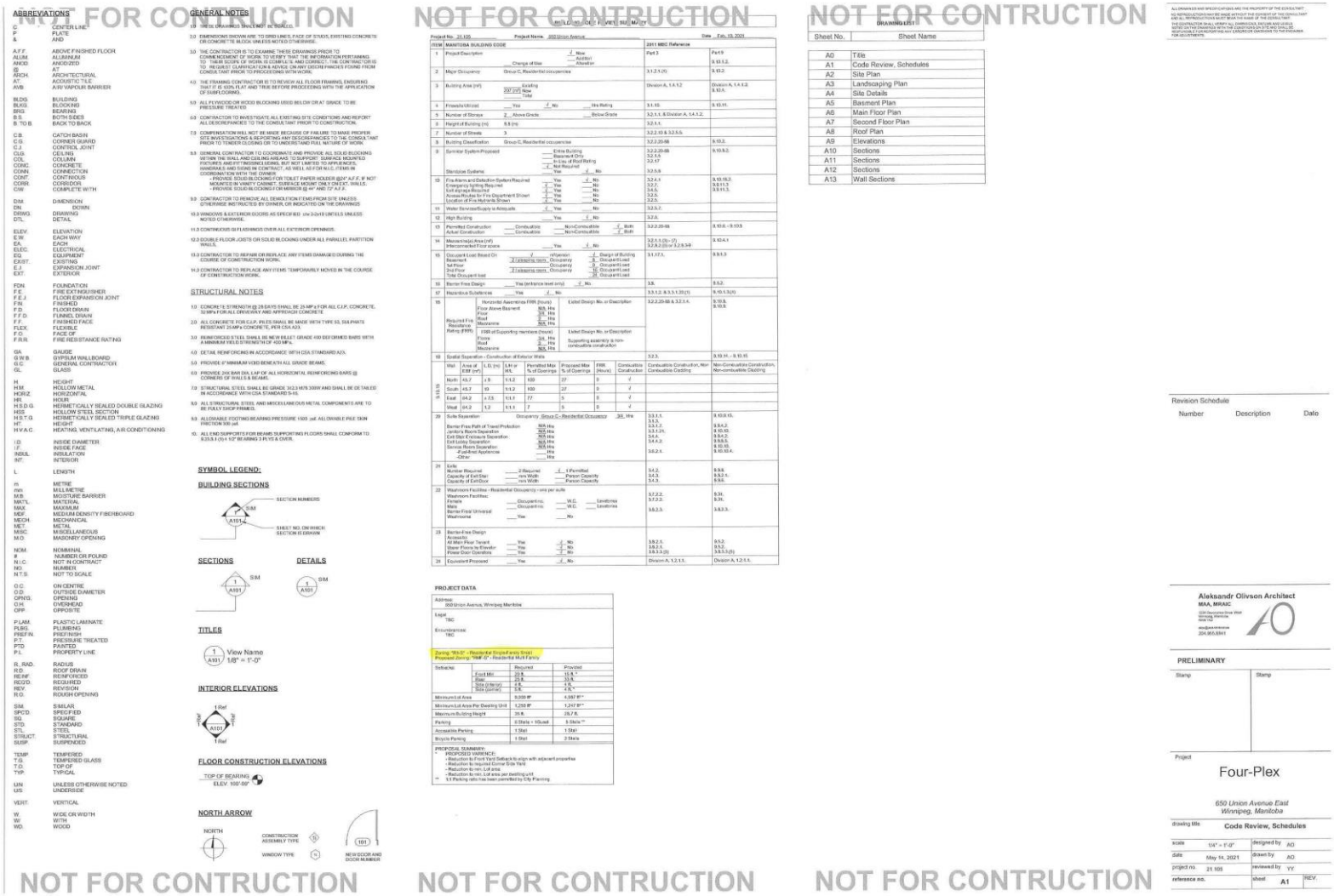

ABBREVIATIONS

C	CENTER LINE
P	PLATE
&	AND
A.F.F.	ABOVE FINISHED FLOOR
ALUM.	ALUMINUM
AW/D	AW/D/ZED
@	AT
ARCH.	ARCHITECTURAL
AT.	ACOUSTIC TILE
AVB	A/W VAPOUR BARRIER
BLDG.	BUILDING
BLKG.	BLOCKING
BRG.	BEARING
B.S.	BOTH SIDES
B. TO B.	BACK TO BACK
C.B.	CATCH BASIN
C.G.	CORNER GUARD
C.J.	CONTROL JOINT
CLG.	CEILING
COL.	COLUMN
CONC.	CONCRETE
CONN.	CONNECTION
CONT.	CONTINOUS
CORR.	CORRIDOR
CW	COMPLETE WITH
DIM.	DIMENSION
DN.	DOWN
DRWG.	DRAWING
DTL.	DETAIL
ELEV.	ELEVATION
E.W.	EACH WAY
EA.	EACH
ELEC.	ELECTRICAL
EQ.	EQUIPMENT
EXIST.	EXISTING
E.J.	EXPANSION JOINT
EXT.	EXTERIOR
FDN.	FOUNDATION
F.E.	FIRE EXTINGUISHER
F.E.J.	FLOOR EXPANSION JOINT
FIN.	FINISHED
F.D.	FLOOR DRAIN
F.F.D.	FUNNEL DRAIN
F.F.	FINISHED FACE
FLEX.	FLEXIBLE
F.O.	FACE OF
F.R.R.	FIRE RESISTANCE RATING
GA.	GAUGE
G.W.B.	GYPSUM WALLBOARD
G.C.	GENERAL CONTRACTOR
GL.	GLASS
H.	HEIGHT
H.M.	HOLLOW METAL
HORIZ.	HORIZONTAL
HR.	HOUR
H.S.D.G.	HERMETICALLY SEALED DOUBLE GLAZING
HSS	HOLLOW STEEL SECTION
H.S.T.G.	HERMETICALLY SEALED TRIPLE GLAZING
HT.	HEIGHT
H.V.A.C.	HEATING, VENTILATING, AIR CONDITIONING
I.D.	INSIDE DIAMETER
I.F.	INSIDE FACE
INSUL.	INSULATION
INT.	INTERIOR
L.	LENGTH
m	METRE
mm	MILLIMETRE
M.B.	MOISTURE BARRIER
MAT'L.	MATERIAL
MAX.	MAXIMUM
MDF.	MEDIUM DENSITY FIBERBOARD
MECH.	MECHANICAL
MET.	METAL
MISC.	MISCELLANEOUS
M.O.	MASONRY OPENING
NOM.	NOMINAL
#	NUMBER OR POUND
N.I.C.	NOT IN CONTRACT
NO.	NUMBER
N.T.S.	NOT TO SCALE
O.C.	ON CENTRE
O.D.	OUTSIDE DIAMETER
OPNG.	OPENING
O.H.	OVERHEAD
OPP.	OPPOSITE
P.LAM.	PLASTIC LAMINATE
PLBG.	PLUMBING
PREFIN.	PREFINISH
P.T.	PRESSURE TREATED
PTD	PAINTED
P.L.	PROPERTY LINE
R. /RAD.	RADIUS
R.D.	ROOF DRAIN
REINF.	REINFORCED
REQ'D.	REQUIRED
REV.	REVISION
R.O.	ROUGH OPENING
SIM.	SIMILAR
SPCD.	SPECIFIED
SQ.	SQUARE
STD.	STANDARD
STL.	STEEL
STRUCT.	STRUCTURAL
SUSP.	SUSPENDED
TEMP.	TEMPERED
T.G.	TEMPERED GLASS
T.O.	TOP OF
TYP.	TYP/CAL
U/N	UNLESS OTHERWISE NOTED
U/S	UNDERSIDE
VERT.	VERTICAL
W.	WIDE OR WIDTH
W/	WITH
WD.	WOOD

GENERAL NOTES

1.0 THESE DRAWINGS SHALL NOT BE SCALED.

2.0 DIMENSIONS SHOWN ARE TO GRID LINES, FACE OF STUDS, EXISTING CONCRETE OR CONCRETE BLOCK UNLESS NOTED OTHERWISE.

3.0 THE CONTRACTOR IS TO EXAMINE THESE DRAWINGS PRIOR TO COMMENCEMENT OF WORK TO VERIFY THAT THE INFORMATION PERTAINING TO THEIR SCOPE OF WORK IS COMPLETE AND CORRECT. THE CONTRACTOR IS TO REQUEST CLARIFICATION & ADVICE ON ANY DISCREPANCIES FOUND FROM CONSULTANT PRIOR TO PROCEEDING WITH WORK.

4.0 THE FRAMING CONTRACTOR IS TO REVIEW ALL FLOOR FRAMING, ENSURING THAT IT IS 100% FLAT AND TRUE BEFORE PROCEEDING WITH THE APPLICATION OF SUBFLOORING.

5.0 ALL PLYWOOD OR WOOD BLOCKING USED BELOW OR AT GRADE TO BE PRESSURE TREATED.

6.0 CONTRACTOR TO INVESTIGATE ALL EXISTING SITE CONDITIONS AND REPORT ALL DISCREPANCIES TO THE CONSULTANT PRIOR TO CONSTRUCTION.

7.0 CONFIRMATION WILL NOT BE MADE BECAUSE OF FAILURE TO MAKE PROPER SITE INVESTIGATIONS & REPORTING ANY DISCREPANCIES TO THE CONSULTANT PRIOR TO TENDER CLOSING OR TO UNDERSTAND FULL NATURE OF WORK.

8.0 GENERAL CONTRACTOR TO COORDINATE AND PROVIDE ALL SOLID BLOCKING WITHIN THE WALL AND CEILING AREAS TO SUPPORT: SURFACE MOUNTED FIXTURES AND FITTINGS INCLUDING, BUT NOT LIMITED TO APPLIANCES, HANDRAILS AND SIGNS IN CONTRACT, AS WELL AS FOR N.I.C. ITEMS IN COORDINATION WITH THE OWNER
- PROVIDE SOLID BLOCKING FOR TOILET PAPER HOLDER @24" A.F.F. IF NOT MOUNTED IN VANITY CABINET, SURFACE MOUNT ONLY ON EXT. WALLS.
- PROVIDE SOLID BLOCKING FOR MIRROR @ 48" AND 72" A.F.F.

9.0 CONTRACTOR TO REMOVE ALL DEMOLITION ITEMS FROM SITE UNLESS OTHERWISE INSTRUCTED BY OWNER, OR INDICATED ON THE DRAWINGS.

10.0 WINDOWS & EXTERIOR DOORS AS SPECIFIED. c/w 3x3x10 LINTELS UNLESS NOTED OTHERWISE.

11.0 CONTINUOUS GYP FLASHINGS OVER ALL EXTERIOR OPENINGS.

12.0 DOUBLE FLOOR JOISTS OR SOLID BLOCKING UNDER ALL PARALLEL PARTITION WALLS.

13.0 CONTRACTOR TO REPAIR OR REPLACE ANY ITEMS DAMAGED DURING THE COURSE OF CONSTRUCTION WORK.

14.0 CONTRACTOR TO REPLACE ANY ITEMS TEMPORARILY MOVED IN THE COURSE OF CONSTRUCTION WORK.

STRUCTURAL NOTES

1.0 CONCRETE STRENGTH @ 28 DAYS SHALL BE 25 MPa FOR ALL C.I.P. CONCRETE, 32 MPa FOR ALL DRIVEWAY AND APPROACH CONCRETE

2.0 ALL CONCRETE FOR C.I.P. PILES SHALL BE MADE WITH TYPE 50, SULPHATE RESISTANT 25 MPa CONCRETE, PER CSA A23.

3.0 REINFORCED STEEL SHALL BE NEW BILLET GRADE 400 DEFORMED BARS WITH A MINIMUM YIELD STRENGTH OF 400 MPa.

4.0 DETAIL REINFORCING IN ACCORDANCE WITH CSA STANDARD A23.

5.0 PROVIDE 6" MINIMUM VOID BENEATH ALL GRADE BEAMS.

6.0 PROVIDE 2-#15 BAR DIA. LAP OF ALL HORIZONTAL REINFORCING BARS @ CORNERS OF WALLS & BEAMS.

7.0 STRUCTURAL STEEL SHALL BE GRADE 350 MPa 300W AND SHALL BE DETAILED IN ACCORDANCE WITH CSA STANDARD S-16.

8.0 ALL STRUCTURAL STEEL AND MISCELLANEOUS METAL COMPONENTS ARE TO BE FULLY SHOP FINISHED.

9.0 ALLOWABLE FOOTING BEARING PRESSURE 150 psf. ALL ALLOWABLE PILE SKIN FRICTION 300 psf.

10.0 ALL END SUPPORTS FOR BEAMS SUPPORTING FLOORS SHALL CONFORM TO 9.23.5.1 (1) I. 127 BEARING 3 IN. TO & OVER.

SYMBOL LEGEND:

BUILDING SECTIONS

SECTIONS

DETAILS

TITLES

INTERIOR ELEVATIONS

FLOOR CONSTRUCTION ELEVATIONS

NORTH ARROW

Project No. 21.105	Project Name 650 Union Avenue	Date Feb. 19, 2021

ITEM	MANITOBA BUILDING CODE		2011 NBC Reference	
1	Project Description	√ New / Addition / Alteration	Part 3	Part 9
	Change of Use			9.10.1.3.
2	Major Occupancy	Group C, Residential occupancies	3.1.2.1.(1)	9.10.2.
3	Building Area (m²)	Existing 297 (m²) Now / Total	Division A, 1.4.1.2	Division A, 1.4.1.2. 9.10.1.
4	Firewalls Utilized	Yes / √ No — Hrs Rating	3.1.10.	9.10.11.
5	Number of Storeys	2 Above Grade — Below Grade	3.2.1.1. & Division A, 1.4.1.2.	
6	Height of Building (m)	8.8 (m)	3.2.1.1.	
7	Number of Streets	3	3.2.2.10 & 3.2.5.5.	
8	Building Classification	Group C, Residential occupancies	3.2.2.20-68	9.10.2.
9	Sprinkler System Proposed	Entire Building / Basement Only / In Lieu of Roof Rating / √ Not Required	3.2.2.20-68 3.2.1.5 3.2.17	9.10.8.2.
	Standpipe Systems	Yes / √ No	3.2.5.9	
10	Fire Alarm and Detection System Required	Yes / √ No	3.2.4.1	9.10.18.2.
	Emergency lighting Required	√ Yes / No	3.2.7.	9.9.11.3.
	Exit signage Required	√ Yes / No	3.4.5.	9.9.11.3.
	Access Routes for Fire Department Shown	√ Yes / No	3.2.5.	
	Location of Fire Hydrants Shown	√ Yes / No	3.2.5.	
11	Water Services/Supply is Adequate	√ Yes / No	3.2.5.7.	
12	High Building	Yes / √ No	3.2.6.	
13	Permitted Construction	Combustible / Non-Combustible / √ Both	3.2.2.20-68	9.10.6. - 9.10.9.
	Actual Construction	Combustible / Non-Combustible / √ Both		
14	Mezzanine(s) Area (m²)		3.2.1.1.(3)- (7) 3.2.8.2.(5) or 3.2.9.3.(2)	9.10.4.1
	Interconnected Floor areas	Yes / √ No		
15	Occupant Load Based On	√ 1 person per ___ m² of Occupancy	A - Assign of Building	3.1.17.1.	9.9.1.3
	Basement	2	Occupancy	B - Occupant Load		
	1st Floor	2	Occupancy	D - Occupant Load		
	2nd Floor	2	Occupancy	TE - Occupant Load		
	Total Occupant load	4		24 - Occupant Load		
16	Barrier Free Design	Yes (entrance level only) / √ No	3.8.	9.5.2.
17	Hazardous Substances	Yes / √ No	3.3.1.2. & 3.3.1.20.(1)	9.10.1.3.(4)
18	Required Fire Resistance Rating (FRR)	Horizontal Assemblies FRR (hours): Basement / Floor Above Basement / Floor / Roof / Mezzanine — Hrs	Listed Design No. or Description	3.2.2.20-68 & 3.2.1.4.	9.10.8. 9.10.9.
		1/2 of Supporting members (hours): Floors / Roof / Mezzanine — Hrs	Listed Design No. or Description / Supporting assembly is non-combustible construction		
19	Spatial Separation - Construction of Exterior Walls			3.2.3.	9.10.14. - 9.10.15.
9.10.15.	Wall: North / South / East / West	Area of EBF (m²): 45.7 / 45.7 / 64.2 / 64.2	L.D. (m): x 9 / 1.1.2 / x 7.5 / 1.2	L/H or H/L: 1.1.2 / 1.1.2 / 1.1.1 / 1.1.1	Permitted Max % of Openings: 100 / 100 / 77 / 77	Proposed Max % of Openings: 27 / 27 / 5 / 5	FRR (Hours): 0 / 0 / 0 / 0	Combustible Construction: √ / √ / √ / √	Combustible Construction, Max Combustible Cladding	Non-Combustible Construction, Non-combustible Cladding
20	Suite Separation	Occupancy: Group C - Residential Occupancy — 30 Hrs							3.3.1.1. 3.3.3. 3.3.1.2. 3.3.1.21. 3.4.4. 3.4.4.2. 3.6.2.1.	9.10.8.10. 9.8.4.2. 9.10.10. 9.8.4.2. 9.10.8.5. 9.10.10. 9.10.10.4.
	Barrier Free Path of Travel Protection	30 Hrs								
	Janitor's Room Separation	30 Hrs								
	Exit Stair Enclosure Separation	30 Hrs								
	Exit Lobby Separation	30 Hrs								
	Service Room Separation	30 Hrs								
	Fuel-fired Appliances	___ Hrs								
	Other	___ Hrs								
21	Exits								3.4.2. 3.4.3. 3.4.3.	9.9.8. 9.9.2.5. 9.9.6.
	Number Required	___ 2 Required								
	Capacity of Exit/Stair	___ mm Width								
	Capacity of Exit/Door	___ mm Width								
		√ 1 Permitted / ___ Person Capacity / ___ Person Capacity								
22	Washroom Facilities - Residential Occupancy - one per suite								3.7.2.2. 3.7.2.1. 3.6.2.3.	9.31. 9.39. 9.8.3.3.
	Washroom Facilities:									
	Female	___ Occupant no.	___ W.C.	___ Lavatories						
	Male	___ Occupant no.	___ W.C.	___ Lavatories						
	Barrier Free/ Universal	___ Yes	___ No							
	Washrooms									
23	Barrier-free Design									
	Accessibly									
	All Main Floor Tenant	___ Yes	√ No						3.8.2.1.	9.5.2.
	Upper Floors by Elevator	___ Yes	√ No						3.8.2.1.	9.8.2.
	Power Door Operators	___ Yes	√ No						3.8.3.3.(5)	9.5.3.(5)
24	Equivalent Proposed	___ Yes	√ No						Division A, 1.2.1.1.	Division A, 1.2.1.1.

PROJECT DATA

Address: 650 Union Avenue, Winnipeg Manitoba

Legal: TBC

Encumbrances: TBC

Zoning: "RMD" - Residential Single Family Small
Proposed Zoning: "RMF-D" - Residential Multi Family

Setbacks		Required	Provided
	Front Min	20 ft.	15 ft. *
	Rear	25 ft.	33 ft.
	Side (Interior)	4 ft.	4 ft.
	Side (corner)	10 ft.	4 ft. *
Minimum Lot Area		9,000 ft²	4,997 ft² *
Minimum Lot Area Per Dwelling Unit		1,250 ft²	1,247 ft² *
Maximum Building Height		35 ft.	25.7 ft.
Parking		8 Stalls + 10(use)	8 Stalls **
Accessible Parking		1 Stall	1 Stall
Bicycle Parking		1 Stall	3 Stalls

PROPOSAL SUMMARY:
* PROPOSED VARIENCE:
- Reduction to Front Yard Setback to align with adjacent properties
- Reduction to required Corner Side Yard
- Reduction to min. Lot area
- Reduction to min. Lot area per dwelling unit
** 1:1 Parking ratio has been permitted by City Planning

Sheet No.	Sheet Name
A0	Title
A1	Code Review, Schedules
A2	Site Plan
A3	Landscaping Plan
A4	Site Details
A5	Basment Plan
A6	Main Floor Plan
A7	Second Floor Plan
A8	Roof Plan
A9	Elevations
A10	Sections
A11	Sections
A12	Sections
A13	Wall Sections

ALL DRAWINGS AND SPECIFICATIONS ARE THE PROPERTY OF THE CONSULTANT. NO REPRODUCTION MAY BE MADE WITHOUT THE CONSENT OF THE CONSULTANT AND ALL REPRODUCTIONS MUST BEAR THE NAME OF THE CONSULTANT. THE CONTRACTOR SHALL VERIFY ALL DIMENSIONS, NOTES AND LEVELS SHOWN ON THESE DRAWINGS BEFORE PROCEEDING WITH THE WORK. THE CONTRACTOR IS RESPONSIBLE FOR REPORTING ANY DISCREPANCIES OR OMISSIONS TO THE CONSULTANT FOR ADJUSTMENTS.

Revision Schedule

Number	Description	Date

Aleksandr Olivson Architect
MAA, MRAIC
204.955.6941

PRELIMINARY

Stamp | Stamp

Project

Four-Plex

650 Union Avenue East
Winnipeg, Manitoba

drawing title: Code Review, Schedules

scale	1/4" = 1'-0"	designed by	AO
date	May 14, 2021	drawn by	AO
project no.	21.105	reviewed by	YY
reference no.		sheet	A1
			REV.

NOT FOR CONTRUCTION
NOT FOR CONTRUCTION
NOT FOR CONTRUCTION
NOT FOR CONTRUCTION
NOT FOR CONTRUCTION
NOT FOR CONTRUCTION

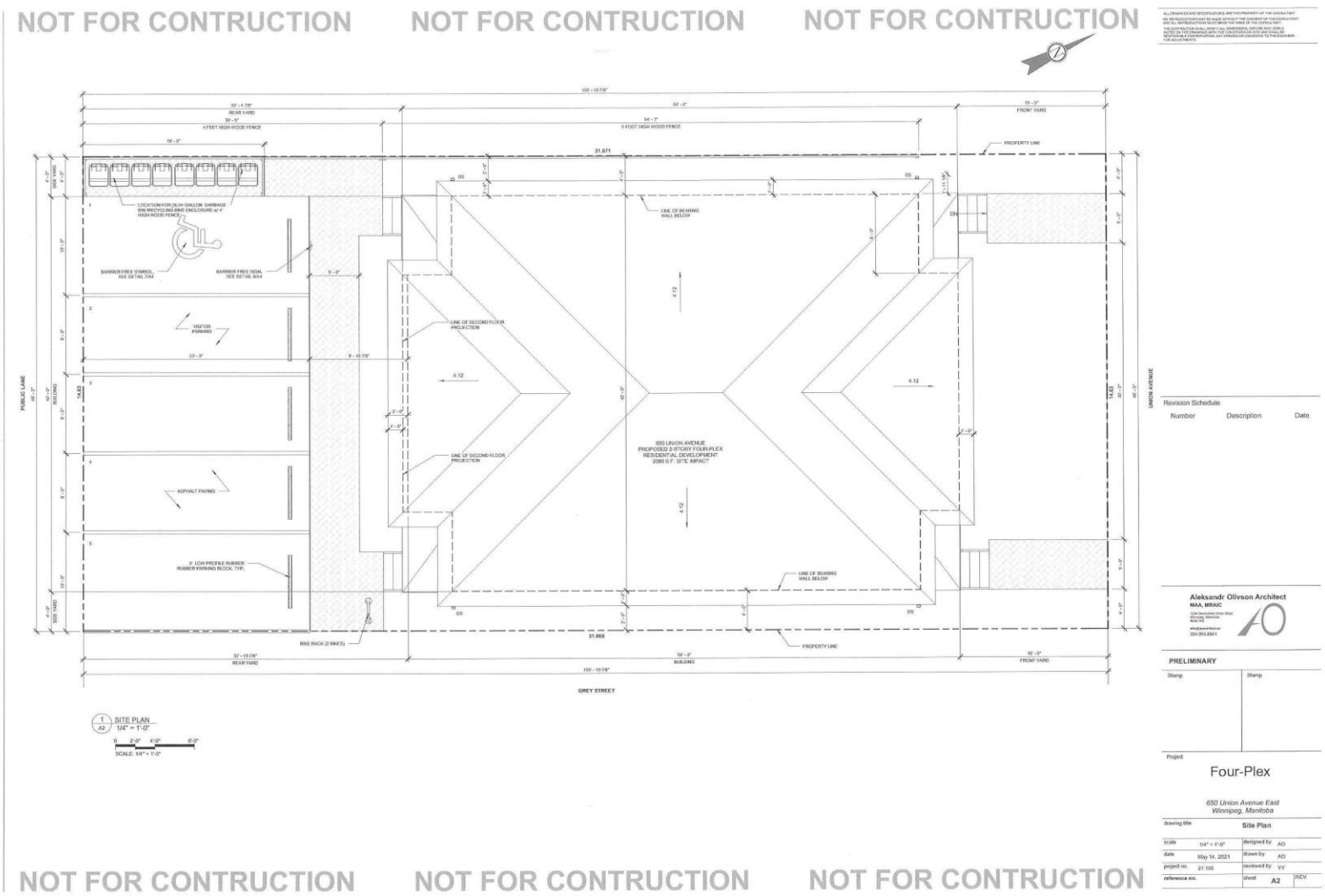

Revision Schedule

Number	Description	Date

Aleksandr Olivson Architect
MAA, MRAIC

PRELIMINARY

Stamp

Stamp

Project

Four-Plex

650 Union Avenue East
Winnipeg, Manitoba

drawing title	Site Plan		
scale	1/4" = 1'-0"	designed by	AO
date	May 14, 2021	drawn by	AO
project no.	21.108	reviewed by	YY
reference no.		sheet	A2
			REV.

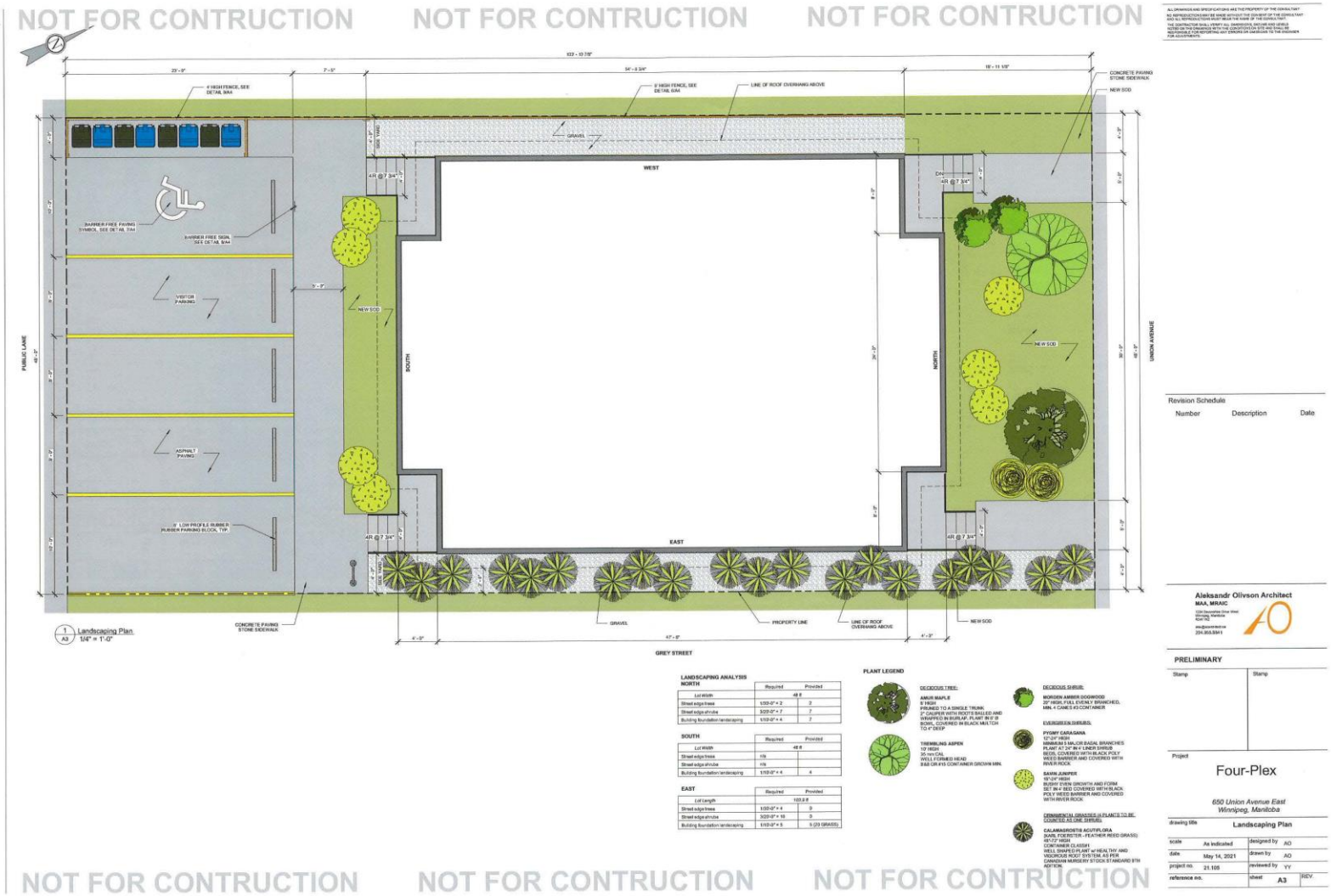
NOT FOR CONTRUCTION
NOT FOR CONTRUCTION
NOT FOR CONTRUCTION
6' HIGH FENCE, SEE DETAIL 9/A4
5' HIGH FENCE, SEE DETAIL 9/A4
LINE OF ROOF OVERHANG ABOVE
CONCRETE PAVING STONE SIDEWALK
NEW SOD
GRAVEL
WEST
BARRIER FREE PAVING SYMBOL, SEE DETAIL 8/A4
BARRIER FREE SIGN, SEE DETAIL 8/A4
VISITOR PARKING
ASPHALT PAVING
9' LOW PROFILE RUBBER RUBBER PARKING BLOCK, TYP.
SOUTH
NORTH
EAST
PUBLIC LANE
UNION AVENUE
GREY STREET
CONCRETE PAVING STONE SIDEWALK
GRAVEL
PROPERTY LINE
LINE OF ROOF OVERHANG ABOVE
NEW SOD
1 Landscaping Plan
A3 1/4" = 1'-0"
LANDSCAPING ANALYSIS
NORTH
SOUTH
EAST
PLANT LEGEND
DECIDUOUS TREE:
AMUR MAPLE
6' HIGH
PRUNED TO A SINGLE TRUNK
2" CALIPER WITH ROOTS BALLED AND WRAPPED IN BURLAP. PLANT IN 6' Ø BOWL, COVERED IN BLACK MULCH TO 4" DEEP
TREMBLING ASPEN
10' HIGH
35 mm CAL
WELL FORMED HEAD
B&B OR #15 CONTAINER GROWN MIN.
DECIDUOUS SHRUB:
MORDEN AMBER DOGWOOD
20" HIGH, FULL EVENLY BRANCHED, MIN. 4 CANES #3 CONTAINER
EVERGREEN SHRUBS:
PYGMY CARAGANA
12"-24" HIGH
MINIMUM 5 MAJOR BASAL BRANCHES
PLANT AT 24" IN 4' UNDER SHRUB
BEDS, COVERED WITH BLACK POLY WEED BARRIER AND COVERED WITH RIVER ROCK
SAWN JUNIPER
15"-24" HIGH
BUSHY, DENSE GROWTH AND FORM
PLANT IN 4' BED COVERED WITH BLACK POLY WEED BARRIER AND COVERED WITH RIVER ROCK
ORNAMENTAL GRASSES (3 PLANTS TO BE CONSTED AS ONE SHRUB):
CALAMAGROSTIS ACUTIFLORA
(KARL FOERSTER - FEATHER REED GRASS)
48"-72" HIGH
CONTAINER CLASS#1
WELL SHAPED PLANT w/ HEALTHY AND VIGOROUS ROOT SYSTEM, AS PER CANADIAN NURSERY STOCK STANDARD 8TH EDITION
Revision Schedule
Number Description Date
Aleksandr Olivson Architect
MAA, MRAIC
PRELIMINARY
Stamp
Stamp
Project
Four-Plex
650 Union Avenue East
Winnipeg, Manitoba
drawing title
Landscaping Plan
scale As indicated
date May 14, 2021
project no. 21.105
reference no.
designed by AO
drawn by AO
reviewed by YY
sheet A3
REV.
NOT FOR CONTRUCTION
NOT FOR CONTRUCTION
NOT FOR CONTRUCTION

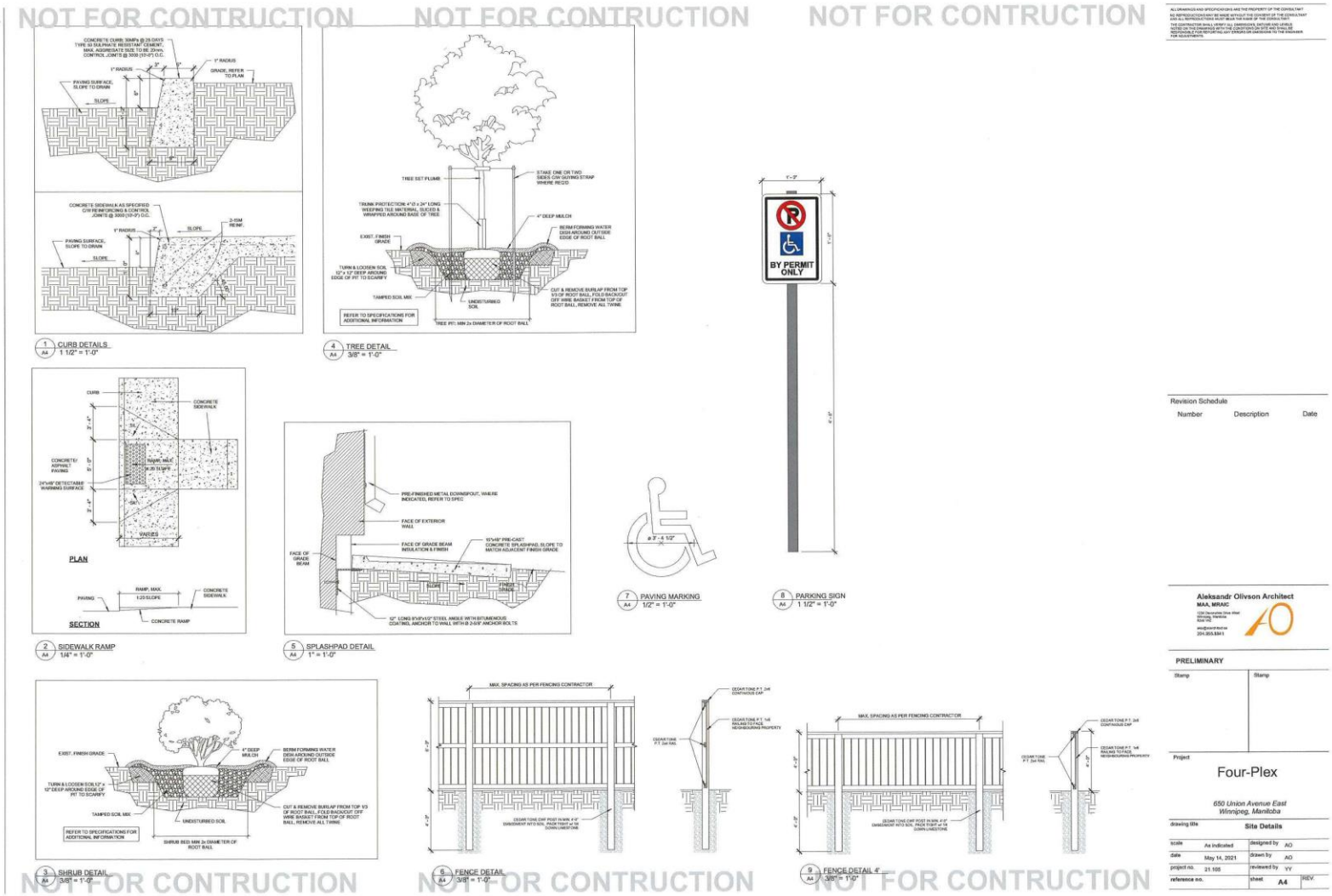
NOT FOR CONTRUCTION
NOT FOR CONTRUCTION
NOT FOR CONTRUCTION
1 CURB DETAILS
A4 1 1/2" = 1'-0"
4 TREE DETAIL
A4 3/8" = 1'-0"
BY PERMIT ONLY
PLAN
SECTION
2 SIDEWALK RAMP
A4 1/4" = 1'-0"
5 SPLASHPAD DETAIL
A4 1" = 1'-0"
7 PAVING MARKING
A4 1/2" = 1'-0"
8 PARKING SIGN
A4 1 1/2" = 1'-0"
3 SHRUB DETAIL
A4 3/8" = 1'-0"
6 FENCE DETAIL
A4 3/8" = 1'-0"
9 FENCE DETAIL 4'
A4 3/8" = 1'-0"
NOT FOR CONTRUCTION
NOT FOR CONTRUCTION
NOT FOR CONTRUCTION
Revision Schedule
Number
Description
Date
Aleksandr Olivson Architect
MAA, MRAIC
PRELIMINARY
Stamp
Stamp
Project
Four-Plex
650 Union Avenue East
Winnipeg, Manitoba
drawing title
Site Details
scale
As indicated
designed by
AO
date
May 14, 2021
drawn by
AO
project no.
21.105
reviewed by
YY
reference no.
sheet
A4
REV.

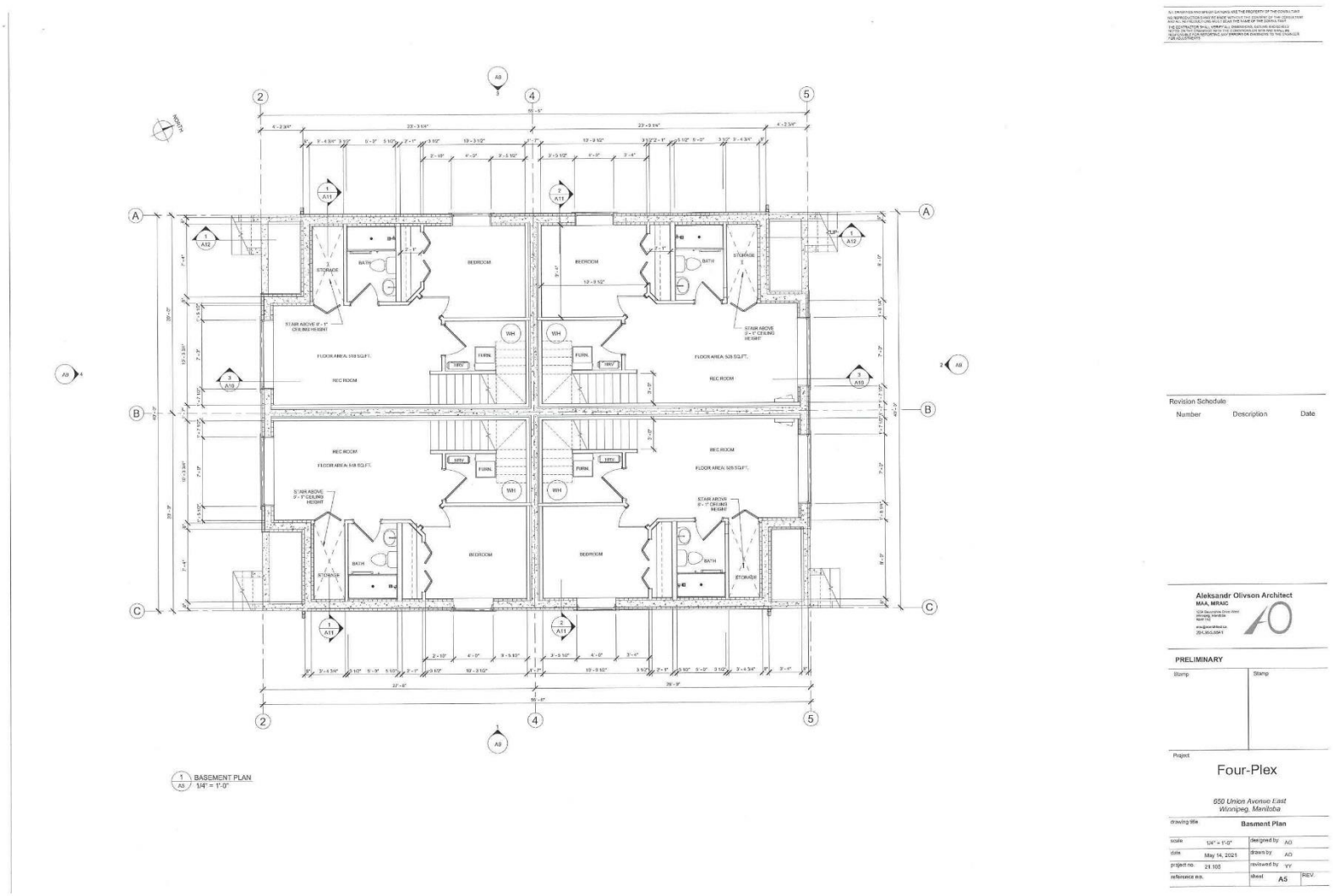
BEDROOM
BATH
STORAGE
REC ROOM
FURN.
WH
BASEMENT PLAN
1/4" = 1'-0"
Revision Schedule
Number
Description
Date
Aleksandr Olivson Architect
MAA, MRAIC
PRELIMINARY
Stamp
Project
Four-Plex
650 Union Avenue East
Winnipeg, Manitoba
drawing title
Basment Plan
scale
1/4" = 1'-0"
designed by
AO
date
May 14, 2021
drawn by
AO
project no.
21.105
reviewed by
YY
reference no.
sheet
A5
REV.

NOT FOR CONTRUCTION NOT FOR CONTRUCTION NOT FOR CONTRUCTION

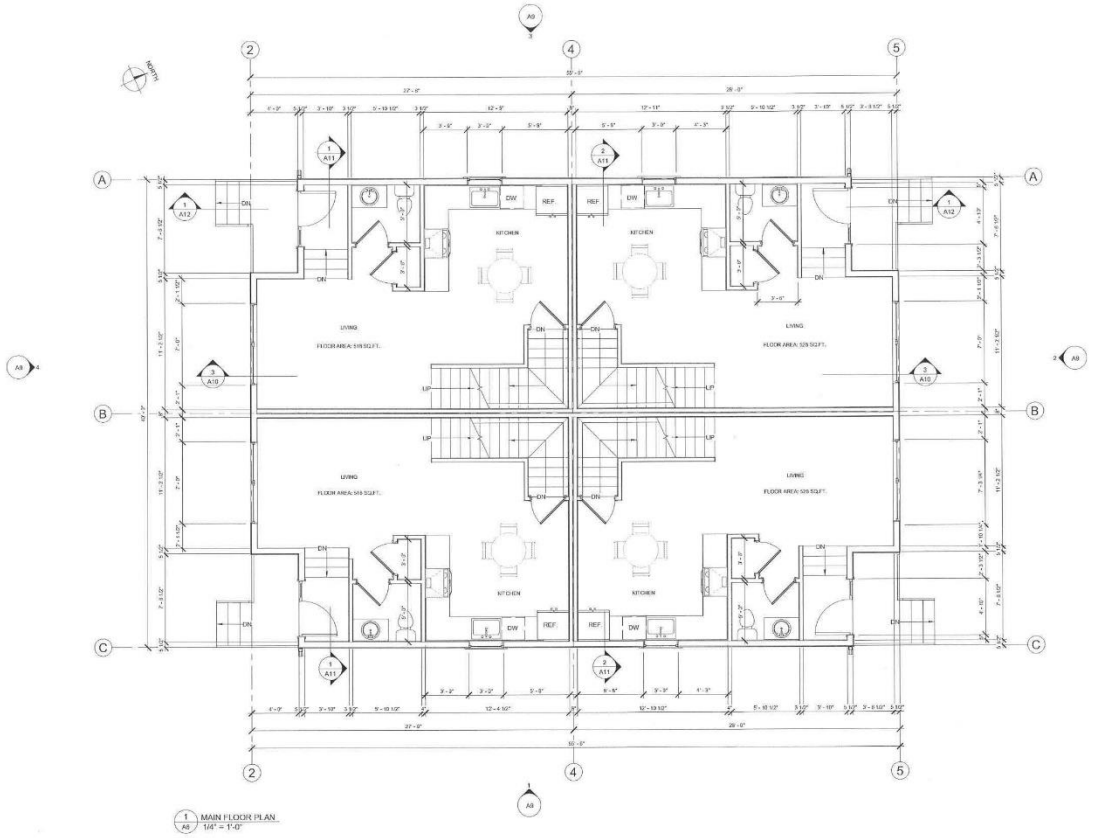

1 MAIN FLOOR PLAN
A6 1/4" = 1'-0"

Revision Schedule

Number	Description	Date

Aleksandr Olivson Architect
MAA, MRAIC

PRELIMINARY

Stamp

Stamp

Project

Four-Plex

650 Union Avenue East
Winnipeg, Manitoba

Drawing title: Main Floor Plan

scale	1/4" = 1'-0"	designed by	AO
date	May 14, 2021	drawn by	AO
project no.	21.105	reviewed by	YY
reference no.		sheet	A6

REV.

NOT FOR CONTRUCTION NOT FOR CONTRUCTION NOT FOR CONTRUCTION

NOT FOR CONTRUCTION NOT FOR CONTRUCTION NOT FOR CONTRUCTION

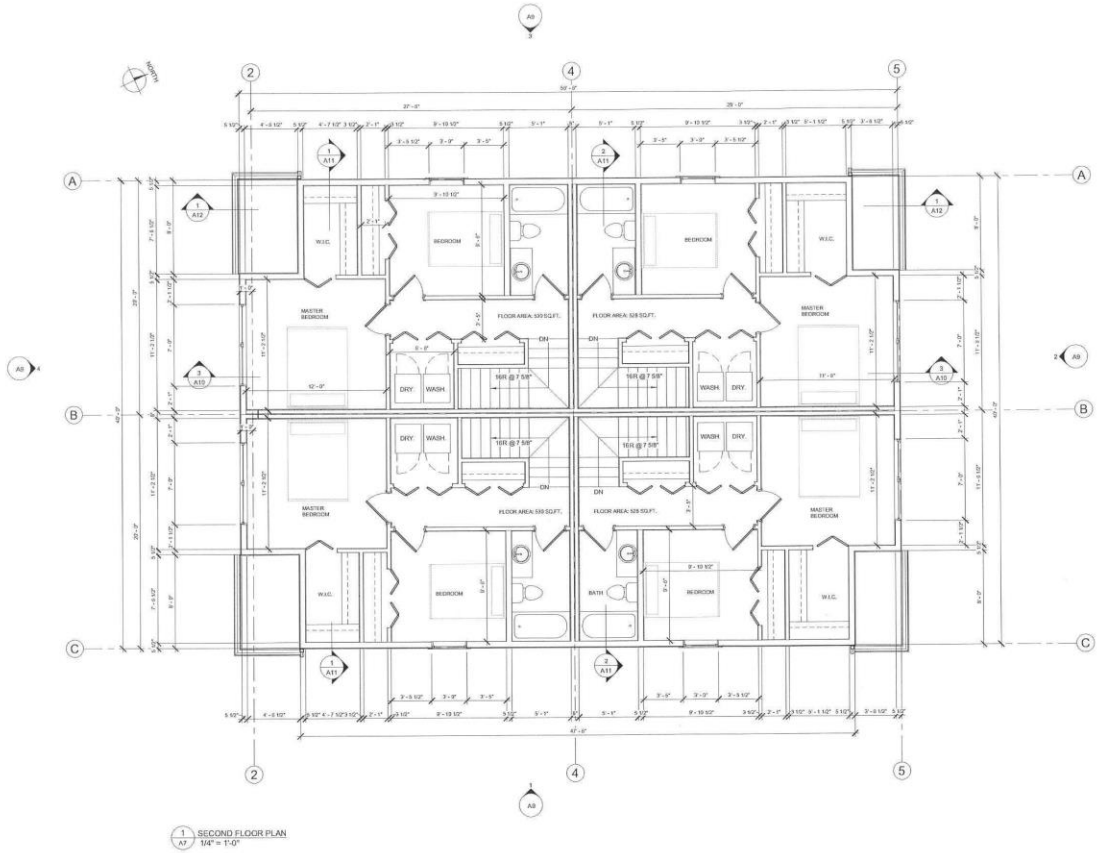

1 SECOND FLOOR PLAN
1/4" = 1'-0"

Revision Schedule

Number	Description	Date

Aleksandr Olivson Architect
MAA, MRAIC

PRELIMINARY

Stamp

Stamp

Project

Four-Plex

650 Union Avenue East
Winnipeg, Manitoba

drawing title: Second Floor Plan

scale	1/4" = 1'-0"	designed by	AO
date	May 14, 2021	drawn by	AO
project no.	21-105	reviewed by	YY
reference no.		sheet	A7

REV.

NOT FOR CONTRUCTION NOT FOR CONTRUCTION NOT FOR CONTRUCTION

NOT FOR CONTRUCTION NOT FOR CONTRUCTION NOT FOR CONTRUCTION

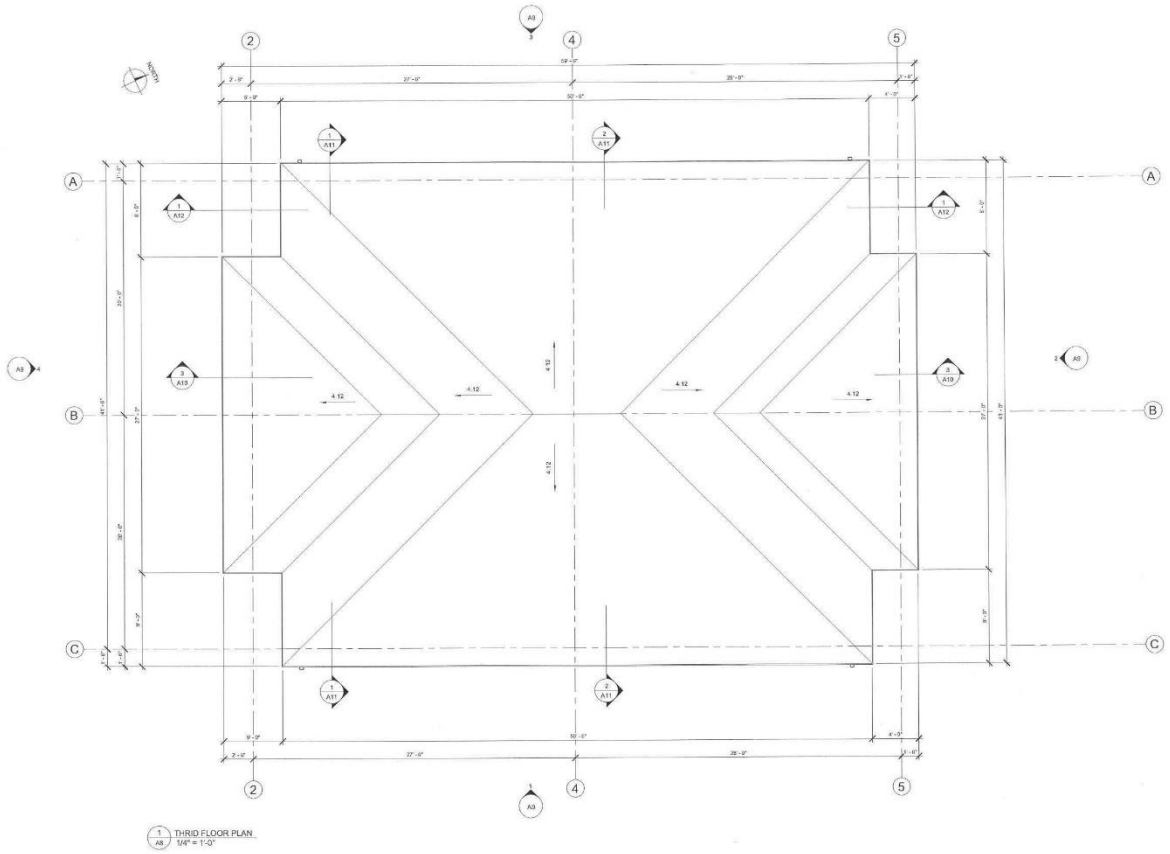

1 / A8 THIRD FLOOR PLAN
1/4" = 1'-0"

Revision Schedule

Number	Description	Date

Aleksandr Olivson Architect
MAA, MRAIC

PRELIMINARY

Stamp | Stamp

Project

Four-Plex

650 Union Avenue East
Winnipeg, Manitoba

drawing title	Roof Plan		
scale	1/4" = 1'-0"	designed by	AO
date	May 14, 2021	drawn by	AO
project no.	21.105	reviewed by	YY
reference no.		sheet	A8

NOT FOR CONTRUCTION NOT FOR CONTRUCTION NOT FOR CONTRUCTION

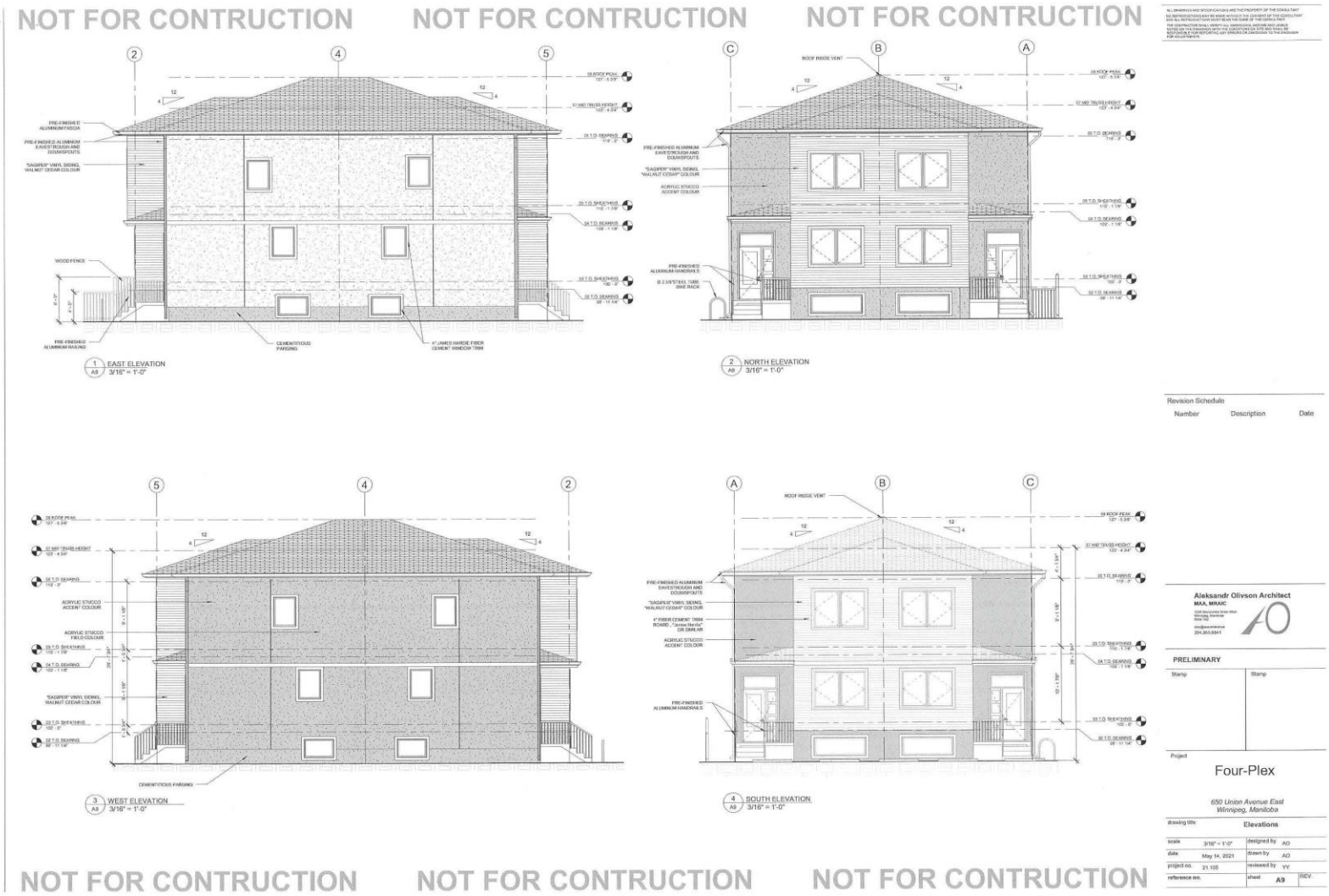
NOT FOR CONTRUCTION
NOT FOR CONTRUCTION
NOT FOR CONTRUCTION
1 EAST ELEVATION
A9 3/16" = 1'-0"
2 NORTH ELEVATION
A9 3/16" = 1'-0"
3 WEST ELEVATION
A9 3/16" = 1'-0"
4 SOUTH ELEVATION
A9 3/16" = 1'-0"
NOT FOR CONTRUCTION
NOT FOR CONTRUCTION
NOT FOR CONTRUCTION
Revision Schedule
Number
Description
Date
Aleksandr Olivson Architect
MAA, MRAIC
PRELIMINARY
Stamp
Stamp
Project
Four-Plex
650 Union Avenue East
Winnipeg, Manitoba
drawing title
Elevations
scale
3/16" = 1'-0"
designed by
AO
date
May 14, 2021
drawn by
AO
project no.
21.105
reviewed by
YY
reference no.
sheet
A9
REV.