Agenda – Council – February 24, 2022

Report – Standing Policy Committee on Property and Development, Heritage and Downtown Development – February 7, 2022

Item No. 13 Subdivision and Rezoning – 197 to 213 Osborne Street (Fort Rouge-East Fort Garry Ward) File DASZ 36/2021 [c/r DAV 192297/2021D]

STANDING COMMITTEE RECOMMENDATION:

On February 16, 2022, the Executive Policy Committee concurred in the recommendation of the Standing Policy Committee on Property and Development, Heritage and Downtown Development and submitted the following to Council:

1. That the subdivision under Development Application No. DASZ 36/2021 be approved for preparation as a plan of subdivision (the "Plan") by a Manitoba Land Surveyor in accordance with the map dated February 1, 2022 and attached as Schedule "A" to this report, with such changes as may be required, and registration in the Winnipeg Land Titles Office, subject to the following conditions:

    A. That the developer be required to enter into a Servicing Agreement with the City pursuant to subsection 259(1) of The City of Winnipeg Charter in accordance with the report of the Administrative Coordinating Group dated January 14, 2022 and attached as Schedule "B" to this report.

    B. That the City enter into, execute and deliver with the developer a Servicing Agreement in accordance with Recommendation 1.A., and such other agreements as determined necessary by the City Solicitor/Director of Legal Services to implement the intent of the foregoing (the "Ancillary Agreements").

    C. That authority be delegated to the City's Director of Planning, Property and Development to negotiate and approve the terms and conditions of the Servicing Agreement, and any Ancillary Agreements, in accordance with this report and such other terms and conditions determined necessary by the City Solicitor/Director of Legal Services to protect the interests of the City.

2. That the Winnipeg Zoning By-law No. 200/2006 be amended by giving first reading to the by-law, attached as Appendix "B" to this report, that rezones the subject land to an "RMU PDO-1 Nbhd Main Streets & PDO-1 Corydon Osborne" District as shown on the map dated February 1, 2022 and included within Schedule "A", subject to the following condition:

Report – Standing Policy Committee on Property and Development, Heritage and Downtown Development – February 7, 2022

STANDING COMMITTEE RECOMMENDATION (continued):

A. That the foregoing amendment to The Winnipeg Zoning By-law No. 200/2006 be brought into conformity with any changes recommended by the Administrative Coordinating Group in their report dated January 14, 2022 and attached as Schedule "B."

3. That in lieu of the dedication of land, the developer shall provide a cash payment in an amount equal to ten percent (10%) of the appraised value of Development Application No. DASZ 36/2021, as determined by the City's Director of Planning, Property and Development.

4. That the Public Service be directed to return the By-law to Council to be given second and third reading to the By-law if a legal plan of subdivision (the "Plan"), prepared by the Manitoba Land Surveyor in accordance with Recommendations 1 and 4 of this Report, and all associated ancillary fees (the "Fees") are submitted to the City within 2 years after the By-law has been given first reading.

5. That the matter will be deemed to be concluded and all approvals in connection with this matter will expire if the Plan and all associated ancillary fees (the "Fees") are not submitted within 2 years after the By-law has been given first reading unless the developer applies for an extension of time before the expiration of the 2 year period and Council approves the extension.

6. That the subdivision section of the By-law will come into force when the Servicing Agreement is fully executed and the Plan is registered in the Winnipeg Land Titles Office.

7. That the zoning section of the By-law will come into force when the Plan is registered in the Winnipeg Land Titles Office.

8. That the By-law will be repealed without coming into force 1 year after the date it is enacted if the Plan is not registered in accordance with recommendation 9 unless the developer applies for an extension of time before the expiration of the 1 year period and Council approves the extension.

Report – Standing Policy Committee on Property and Development, Heritage and Downtown Development – February 7, 2022

STANDING COMMITTEE RECOMMENDATION (continued):

9. That this matter will be deemed to be concluded and all approvals in connection with this matter will expire if the necessary Plan approval signatures on behalf of the City have not been secured within 1 year after the date on which the By-law is enacted unless the developer applies for an extension of time before the expiration of the 1 year period and Council approves the extension.

10. That the Proper Officers of the City be authorized to do all things necessary to implement the intent of the foregoing.

Report – Standing Policy Committee on Property and Development, Heritage and Downtown Development – February 7, 2022

DECISION MAKING HISTORY:

EXECUTIVE POLICY COMMITTEE RECOMMENDATION:

On February 16, 2022, the Executive Policy Committee concurred in the recommendation of the Standing Policy Committee on Property and Development, Heritage and Downtown Development and submitted the matter to Council.

STANDING COMMITTEE RECOMMENDATION:

On February 7, 2022, the Standing Policy Committee on Property and Development, Heritage and Downtown Development concurred in the recommendation of the City Centre Community Committee, with the following amendments:

- In Recommendation 1.A., delete the words ", with the following amendments:"
- Delete Recommendation 1.A.i.a. in its entirety

and submitted the matter to the Executive Policy Committee and Council.

COMMUNITY COMMITTEE RECOMMENDATION:

On February 1, 2022, the City Centre Community Committee concurred in the recommendation of the Winnipeg Public Service, with the following amendment:

- In Recommendation 1.A., delete the period after "Schedule "B" of this report", and replace with the following:

  ", with the following amendments:

  "i. In Section II – Servicing Conditions:

  a. Add the following new conditions:

Report – Standing Policy Committee on Property and Development, Heritage and Downtown Development – February 7, 2022

DECISION MAKING HISTORY (continued):

COMMUNITY COMMITTEE RECOMMENDATION (continued):

"5) c) That the developer ensure public sidewalk access throughout the demolition and construction periods by installing, at no expense to the City, fully protected sidewalk covers (hoarding) running the full length of all public sidewalks abutting the property (along Gertrude Avenue and Osborne street), to be maintained until final construction completion, to the satisfaction of the Director of Public Works.

5) d) That construction activities and construction-related equipment, storage, and materials be contained so that they at no time encroach onto or disturb neighbouring private properties."

and forwarded the matter to the Standing Policy Committee on Property and Development, Heritage and Downtown Development.

PUBLIC HEARING SUMMARY

File: DASZ 36/2021

Before: City Centre Community Committee
Councillor Gilroy, Chairperson
Councillor Orlikow
Councillor Rollins

Public Hearing: February 1, 2022
Council Building, 510 Main Street

Applicant: Landmark Planning & Design Inc. (Brendan Salakoh)

Subject:

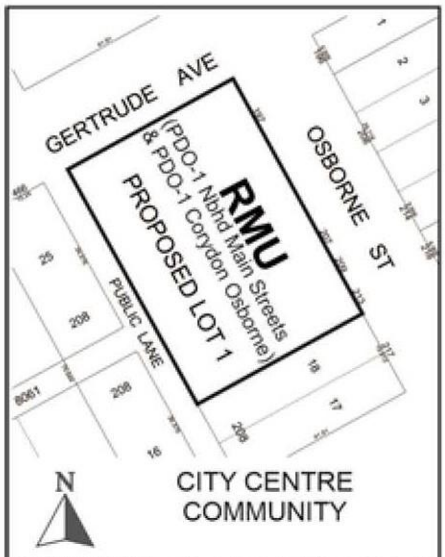

APPLICANT : Landmark Planning & Design Inc. (Brendan Salakoh)
FILE : DASZ 36/2021
PROPOSAL : An application for the approval of the plan of subdivision shown outlined above as may be determined by Council and for a proposed zoning change to By-law No. 200/2006 by rezoning the land shown outlined above from a "C2 PDO-1 NEIGHBOURHOOD MAIN STREETS and PDO-1 CORYDON OSBORNE" COMMERCIAL COMMUNITY DISTRICT to an "RMU PDO-1 NEIGHBOURHOOD MAIN STREETS and PDO-1 CORYDON OSBORNE" RESIDENTIAL MIXED USE DISTRICT to facilitate the consolidation of lands for the construction of a mixed use (residential/commercial) building. **For information, phone Mr. A. Ross,** Planner at 204-986-5235.

Premises Affected: 197 to 213 Osborne Street

For submission to: The Standing Policy Committee on Property and Development, Heritage and Downtown Development

Prepared by: Kate McMillan, Senior Committee Clerk
City Centre Community Committee

Report date: February 1, 2022

Community Committee Recommendation:

On February 1, 2022, the City Centre Community Committee concurred in the recommendation of the Winnipeg Public Service, as amended, and recommended to the Standing Policy Committee on Property and Development, Heritage and Downtown Development:

1. That the subdivision under Development Application No. DASZ 36/2021 be approved for preparation as a plan of subdivision (the "Plan") by a Manitoba Land Surveyor in accordance with the map dated February 1, 2022 and attached as Schedule "A" to this report, with such changes as may be required, and registration in the Winnipeg Land Titles Office, subject to the following conditions:

    A. That the developer be required to enter into a Servicing Agreement with the City pursuant to subsection 259(1) of The City of Winnipeg Charter in accordance with the report of the Administrative Coordinating Group dated January 14, 2022 and attached as Schedule "B" to this report***, with the following amendments:***

        i. In 'Section II – Servicing Conditions':

            a. Add the following new conditions:

                "5) c) That the developer ensure public sidewalk access throughout the demolition and construction periods by installing, at no expense to the City, fully protected sidewalk covers (hoarding) running the full length of all public sidewalks abutting the property (along Gertrude Avenue and Osborne street), to be maintained until final construction completion, to the satisfaction of the Director of Public Works.

                5) d) That construction activities and construction-related equipment, storage, and materials be contained so that they at no time encroach onto or disturb neighbouring private properties."

    B. That the City enter into, execute and deliver with the developer a Servicing Agreement in accordance with Recommendation 1.A., and such other agreements as determined necessary by the City Solicitor/Director of Legal Services to implement the intent of the foregoing (the "Ancillary Agreements").

C. That authority be delegated to the City's Director of Planning, Property and Development to negotiate and approve the terms and conditions of the Servicing Agreement, and any Ancillary Agreements, in accordance with this report and such other terms and conditions determined necessary by the City Solicitor/Director of Legal Services to protect the interests of the City.

2. That the Winnipeg Zoning By-law No. 200/2006 be amended by giving first reading to the by-law, attached as Appendix "B" to this report, that rezones the subject land to an "RMU PDO-1 Nbhd Main Streets & PDO-1 Corydon Osborne" District as shown on the map dated February 1, 2022 and included within Schedule "A", subject to the following condition:

   A. That the foregoing amendment to The Winnipeg Zoning By-law No. 200/2006 be brought into conformity with any changes recommended by the Administrative Coordinating Group in their report dated January 14, 2022 and attached as Schedule "B."

3. That in lieu of the dedication of land, the developer shall provide a cash payment in an amount equal to ten percent (10%) of the appraised value of Development Application No. DASZ 36/2021, as determined by the City's Director of Planning, Property and Development.

4. That the Public Service be directed to return the By-law to Council to be given second and third reading to the By-law if a legal plan of subdivision (the "Plan"), prepared by the Manitoba Land Surveyor in accordance with Recommendations 1 and 4 of this Report, and all associated ancillary fees (the "Fees") are submitted to the City within 2 years after the By-law has been given first reading.

5. That the matter will be deemed to be concluded and all approvals in connection with this matter will expire if the Plan and all associated ancillary fees (the "Fees") are not submitted within 2 years after the By-law has been given first reading unless the developer applies for an extension of time before the expiration of the 2 year period and Council approves the extension.

6. That the subdivision section of the By-law will come into force when the Servicing Agreement is fully executed and the Plan is registered in the Winnipeg Land Titles Office.

7. That the zoning section of the By-law will come into force when the Plan is registered in the Winnipeg Land Titles Office.

8. That the By-law will be repealed without coming into force 1 year after the date it is enacted if the Plan is not registered in accordance with recommendation 9 unless the developer applies for an extension of time before the expiration of the 1 year period and Council approves the extension.

9. That this matter will be deemed to be concluded and all approvals in connection with this matter will expire if the necessary Plan approval signatures on behalf of the City have not been secured within 1 year after the date on which the By-law is enacted unless the developer applies for an extension of time before the expiration of the 1 year period and Council approves the extension.

10. That the Proper Officers of the City be authorized to do all things necessary to implement the intent of the foregoing.

Note: The wording in bold and italics denotes amendments made by the Community Committee.

The City Centre Community Committee provided the following supporting reasons for its recommendation:

1. As the local Councillor for Osborne Village, the small storefronts are the rhythm of the day and the night in Osborne Village.

2. The mixed-used is ideal, the street level commercial is ideal and will be welcomed by residents in the village as well as by all of Winnipeg in this important business district.

3. I don't take the urban development lightly here. The setbacks, you heard my concern about the wading pool and if there was one inch of sun on that wading pool it would have been a no-go zone for this Councillor.

4. The block parents that are so protective are also really important and you heard that in the words of Mr. Swayze today, but the traffic calming is a serious business and that is coming. And it's important when you're doing infill that you're considering the streetscape. As a local Councillor that prioritizes control zones and speed tables and raised pedestrian crossings is going to be built almost simultaneously here, if not before.

5. The encouragement of the age friendly and existing enabled accesses and different mobility treatments that are here are important.

6. I want to acknowledge that there will be some people who will not be pleased with their Councillor, in particular residents of Gertrude who will have a flurry of construction and have experienced already issues related to traffic, but the aesthetic, including green aesthetic and the sustainability that is inherent in infill but also and inherent in a design that is met with a walkability of the neighborhood in mind, let alone some of the more expensive building materials, will be a beautiful addition to Osborne Village.

7. In short, the small storefronts, the continued street level commercial use, the design, the encouragement of age friendly and differing mobilities, the aesthetic including green build and that traffic calming.

Objections under the Charter:

Total number of **v**alid objections as per section 125(2) – 2

In accordance with section 236.1(1), the threshold for sufficient objection has not been met.

Exhibits Filed:

1. Application dated November 9, 2021
2. Notification of Public Hearing dated December 15, 2021
3. Manitoba Status of Titles 3079614/1 and 3079615/1
4. Letter of authorization dated December 22, 2020 from 10068457 Manitoba Ltd. (Adam Sharfe, President) to Landmark Planning & Design Inc.
5. Caveat 151061
6. Title Plot
7. Plans (18 pages)
8. Shadow Study
9. Report from the Urban Planning Division dated January 24, 2022
10. Communication dated November 3, 2021 from Lindsay Somers in support of the application, submitted by Brendan Salakoh on January 20, 2022
11. Communication from Kevin Byrne in support of the application, submitted by Brendan Salakoh on January 20, 2022
12. Communication from Matt Stephenson in support of the application, submitted by Brendan Salakoh on January 20, 2022
13. Communication dated January 24, 2022 from Lindsay Somers in support of the application
14. Inspection Report
15. Communication dated January 26, 2022 from Adam Sharfe in support of the application
16. Communication dated January 27, 2022 from Alexander Hutfluss in support of the application
17. Communication dated January 27, 2022 from Andrew Thiessen in support of the application
18. Communication dated January 29, 2022 from Steve Snyder in support of the application
19. Communication dated January 31, 2022 from Ryan Lavich with respect to the application
20. Presentation in support of the application, submitted by Brendan Salakoh (Applicant) on January 31, 2022
21. Presentation in opposition to the application, submitted by Shirley Forsyth on January 31, 2022
22. Communication dated January 31, 2022 from DJ Trudeau in support of the application
23. Recording of Representations

REPRESENTATIONS:

In Support:

Kevin Byrne
Stephen Chapman
Alexander Hutfluss
Brendan Salakoh
Adam Sharfe
Steve Snyder
Lindsay Somers
Matt Stephenson
Andrew Thiessen
Donovan Toews
DJ Trudeau

In Opposition:

Shirley Forsyth
Dennis Swayze

For Information:

Ryan Lavich

For the City:

A. Ross, Planner, Planning, Property and Development Department

Exhibit “9” referred to in File DASZ 36/2021

ADMINISTRATIVE REPORT

Title: DASZ 36/2021 – 197-213 Osborne Street

Issue: For consideration at the public hearing for a Subdivision and Rezoning for the construction of a 6-storey mixed-use residential and commercial building.

Critical Path: City Centre Community Committee – Standing Policy Committee on Property and Development, Heritage and Downtown Development – Executive Policy Committee – Council.

AUTHORIZATION

Author	Department Head	CFO	CAO
A. Ross, RPP, MCIP	n/a	n/a	

RECOMMENDATIONS

1. That the subdivision under Development Application No. DASZ 36/2021 be approved for preparation as a plan of subdivision (the “Plan”) by a Manitoba Land Surveyor in accordance with the map dated February 1, 2022 and attached as Schedule “A” to this report, with such changes as may be required, and registration in the Winnipeg Land Titles Office, subject to the following conditions:

    A. That the developer be required to enter into a Servicing Agreement with the City pursuant to subsection 259(1) of The City of Winnipeg Charter in accordance with the report of the Administrative Coordinating Group dated January 14, 2022 and attached as Schedule “B” to this report.

    B. That the City enter into, execute and deliver with the developer a Servicing Agreement in accordance with Recommendation 1.A., and such other agreements as determined necessary by the City Solicitor/Director of Legal Services to implement the intent of the foregoing (the "Ancillary Agreements").

    C. That authority be delegated to the City’s Director of Planning, Property and Development to negotiate and approve the terms and conditions of the Servicing Agreement, and any Ancillary Agreements, in accordance with this report and such other terms and conditions determined necessary by the City Solicitor/Director of Legal Services to protect the interests of the City.

2. That the Winnipeg Zoning By-law No. 200/2006 be amended by giving first reading to the by-law, attached as Appendix “B” to this report, that rezones the subject land to an "RMU PDO-1 Nbhd Main Streets & PDO-1 Corydon Osborne” District as shown on the map dated February 1, 2022 and included within Schedule “A”, subject to the following condition:

    A. That the foregoing amendment to The Winnipeg Zoning By-law No. 200/06 be brought into conformity with any changes recommended by the Administrative Coordinating Group in their report dated January 14, 2022 and attached as Schedule “B.”

3. That, in lieu of the dedication of land, the developer shall provide a cash payment in an amount equal to ten percent (10%) of the appraised value of Development Application No. DASZ 36/2021, as determined by the City’s Director of Planning, Property and Development.

4. That the Public Service be directed to return the By-law to Council to be given second and third reading to the By-law if a legal plan of subdivision (the “Plan”), prepared by the Manitoba Land Surveyor in accordance with Recommendations 1 and 4 of this Report, and all associated ancillary fees (the “Fees”) are submitted to the City within 2 years after the By-law has been given first reading.

5. That the matter will be deemed to be concluded and all approvals in connection with this matter will expire if the Plan and all associated ancillary fees (the “Fees”) are not submitted within 2 years after the By-law has been given first reading unless the developer applies for an extension of time before the expiration of the 2 year period and Council approves the extension.

6. That the subdivision section of the By-law will come into force when the Servicing Agreement is fully executed and the Plan is registered in the Winnipeg Land Titles Office.

7. That the zoning section of the By-law will come into force when the Plan is registered in the Winnipeg Land Titles Office.

8. That the By-law will be repealed without coming into force 1 year after the date it is enacted if the Plan is not registered in accordance with recommendation 9 unless the developer applies for an extension of time before the expiration of the 1 year period and Council approves the extension.

9. That this matter will be deemed to be concluded and all approvals in connection with this matter will expire if the necessary Plan approval signatures on behalf of the City have not been secured within 1 year after the date on which the By-law is enacted unless the developer applies for an extension of time before the expiration of the 1 year period and Council approves the extension.

10. That the proper officers of the City be authorized to do all things necessary to implement the intent of the foregoing.

REASON FOR THE REPORT

- Rezoning applications require a Public Hearing as per the *Development Procedures By-law* and *The City of Winnipeg Charter.*

- The Report is being submitted for the Committee's consideration of the development application at the Public Hearing.

IMPLICATIONS OF THE RECOMMENDATIONS

If the recommendations of the Urban Planning Division are concurred in, the subdivision and rezoning for DASZ 36/2021 – 197-213 Osborne Street will be approved with conditions.

HISTORY

N/A

CONSULTATION

Relevant City departments per the Administrative Coordinating Group.

SUBMITTED BY

Department: Planning, Property and Development
Division: Urban Planning
Prepared by: Andrew Ross, RPP, MCIP
Date: January 24, 2022
File No: DASZ 36/2021

DATE: January 24, 2022
FILE: **DASZ 36/21**
RELATED FILES: DAV 21-192297\D
COMMUNITY: City Centre Committee
NEIGHBOURHOOD #: **1.110** - McMillan

SUBJECT: For consideration at the public hearing for a subdivision and rezoning for the construction of a 6-storey mixed-use residential and commercial building.

LOCATION: 209 Osborne ST
LEGAL DESCRIPTION: LOT 19/22 BLOCK 17 PLAN 208 31/5 ST B

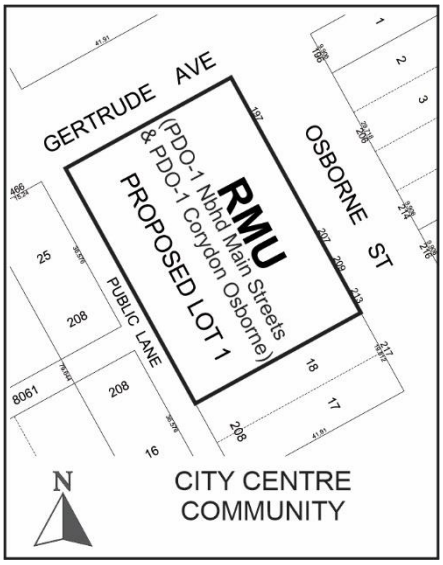

APPLICANT: Brendan Salakoh (Landmark Planning and Design INC)
298 Waterfront Dr
Winnipeg, MB R3B 0G5

OWNER: 10068457 MANITOBA LTD.
2727 Portage Ave 200
Winnipeg, MB R3J 0R2

Appendix A: Planning Discussion

SITE DESCRIPTION

The subject site is located on the southwest corner of Osborne Street and Gertrude Avenue, in the McMillan neighbourhood of the Fort Rouge - East Fort Garry ward.

The property is zoned “C2 PDO-1 Neighbourhood Main Streets, PDO-1 Corydon Osborne” Commercial Community District under Winnipeg Zoning By-law 200/2006, and is designated as Mature Community under the *Complete Communities Direction Strategy*.

This segment of Osborne Street also has the characteristics of a Community Mixed Use Corridor policy area under the *Complete Communities Direction Strategy*.

The property falls within the *Corydon-Osborne Secondary Plan By-law 99/2014*.

The property is 26,812.5 sq. ft. in size, and is currently composed of 2 lots occupied by buildings with Commercial Sales and Service uses.



Figure 1: Aerial Photo of Subject Site and Surrounding Uses (flown 2021)

SURROUNDING LAND USE AND ZONING (See Figures 1 and 2)

North: Gertrude Avenue, then restaurant uses zoned "C2" – Commercial Community.

South: Retail uses zoned "C2" – Commercial Community.

East: Osborne Street, then and retail and drinking establishment uses zoned "C2" – Commercial Community.

West: Rear lane, then vehicle service, social service, public pool, public park and school uses zoned "R2" – Residential Two-Family.



Figure 2: Zoning of the site and surrounding area.

DESCRIPTION OF THE PROPOSED DEVELOPMENT

The applicant seeks to develop a 6-storey bulding with 90 dwelling units and 7 ground-floor commercial units facing Osborne Street, on the subject property.

The development contains 77 vehicle parking spaces with 63 located within an internal parking structure and 14 located off the rear lane. The development also includes a 40-stall indoor bike parking facility, roof terraces, and balconies.

The development requires variances for yards, density, parking, and garbage enclosure, which are analyzed in the Administrative Report for Associated File DAV 21-192297\D.

ANALYSIS AND ISSUES

COLLABORATIVE PLANNING

The applicant worked with the Urban Planning Division to make the following design adjustments through the process leading up to receipt of the application. The applicant agreed to:

Building articulation

Provide a high degree of building articulation with such features as façade projections and recesses, balconies, terraces, window and door articulation and/or other architectural features creating visual interest.

Storefront commercial

Break up the grade level commercial frontage along Osborne into small units, in order to support the Osborne Village tradition of a fine-grained rhythm of small storefronts.

Street interface

- Provide an animated, active frontage against Osborne Street, Gertrude Avenue, and the south building face – given this building will have a high degree of visibility from different neighbourhood vantage points.
- Provide seating against Osborne in order to best meet the intent of the Corydon-Osborne Plan policy:

> *"3.6.8. Village Streetscape*
> *The village streetscape should be an active pedestrian scale space with wide sidewalks and express the heritage identity through lighting, street furniture, brick walkways and interpretive panels."*

Parking

- Meet the Zoning By-Law requirements for parking stall widths including those next to fences and walls, and meet all accessible parking requirements.
- Designate some stalls as visitor parking, given the scale of development and anticipated guests. Several stalls off the lane are designated for visitors.

Trees

Provide tree-supportive infrastructure and trees in the public sidewalk area along Osborne. This is designed as a cost-neutral offset to the applicant's required street edge landscaping under the Zoning By-Law. See "Tree Partnership" below for more information.

OURWINNIPEG

Direction 9 of *OurWinnipeg* states:

- *Collaborate with developers, community organizations and other partners to foster an age-friendly and accessible urban environment.*

That Direction sets out the following Enabling Strategy:

- *With guidance from Complete Communities, encourage age-friendly and accessible new development in existing neighbourhoods.*

The applicant indicates that the proposed development provides the following features which help enable access for Winnipeggers with different levels of mobility (summarized):

- Each dwelling will be accessible by no-step entrance and passageways.
- Exterior pathways which serve as a part of the no-step entry thoroughfare will have a minimum 1500mm x 1500mm level landing.
- Enclosed accessible parking will be provided on each parkade level with barrier-free pathways and no step entries provided to elevators accessing all floors.
- Outdoor accessible parking includes barrier-free pathways to the building
- Each commercial tenant space has a no-step entry directly connected to the Osborne Street sidewalk.
- All suite and washroom doors will have a minimum opening width of 915mm to allow visitors who use mobility devices to access main living areas.
- Doors will incorporate lever handles to reduce the requirement for hand strength and rotation for individuals who have reduced hand control.
- Corridors in all suites will have a minimum width of 1100mm to provide clearance for turning and maneuvering for most mobility equipment.
- Large and open floorplans will allow freedom of movement throughout each suite for individuals to join with others in social interaction.
- All internal public spaces including vestibules, corridors and tenant amenities are designed to be barrier free.
- Consideration is being given to the development of a small proportion of fully accessible suites.

Housing that supports visitability and/or accessibility contributes to ‘aging-in-place’ – an option for residents to remain in their neighbourhood of choice as they move through different stages of life related to age and ability.

COMPLETE COMMUNITIES DIRECTION STRATEGY

This segment of Osborne Street has the characteristics of a Community Mixed Use Corridor under the *Complete Communities Direction Strategy*. With regard to this proposal, the key policies guiding the development of Community Mixed Use Corridors include:

- *Promote the enhancement of existing and the establishment of new Community Mixed Use Corridors.*
- *Promote small scale, fine-grained development that is responsive to the surrounding community context.*

The proposed development is mixed use, which is an ideal land use for the Corridor per *Complete Communities*, and provides ground-floor commercial development at a small storefront scale.

These features help strengthen the walkable neighbourhood main street tradition of the Village.

CORYDON-OSBORNE AREA PLAN

The key policy of the *Corydon-Osborne Area Plan* that applies to this property is:

> *'Mid-rise TOD Mixed Use*
> *The mixed use buildings along on the west side of Pembina Highway and Osborne Street as well as the east side of Osborne Street (north of McMillan Avenue and west of Scott Street) step down from the height of the Osborne Station "village" high-rise TOD mixed use buildings as the area transitions into Corydon "village" and Osborne Village. To facilitate this atmosphere, building heights should range from 3 to 8 storeys.'*

At 6 storeys and mixed use, the proposal meets this key policy.

Specific Design Guidelines from the Corydon-Osborne Area Plan that relate to the proposed development are found in "Appendix B" of the Administrative Report for Associated File No. DAV 21-192297\D.

WINNIPEG ZONING BY-LAW 200/06

There are 8 variances associated with the development. These are analyzed in the Administrative Report for Associated File No. DAV 21-192297\D.

TRAFFIC AND PARKING STUDY

At the request of Public Works, the applicant submitted a Traffic Impact and Parking Study (TIPS). The key recommendations of the TIPS are as follows:

- *"The development should provide 85 vehicle parking stalls."*

  The Urban Planning Division sometimes supports the provision of a car share vehicle to help offset onsite parking stall numbers. The onsite stall count is 77. With inclusion of the car share vehicle, which is a condition of approval on the associated variance application, the TIPS recommended parking stall count is met and exceeded[1].

- *"Ten of the vehicle stalls should be reserved for visitors."*

  This is exceeded. 11 visitor/ commercial patron stalls are provided in the rear.

- *"6 of the vehicle stalls should be accessible stalls, with 2 of the 6 accessible by vans."*

  The Winnipeg Zoning By-Law requires 2 accessible stalls and 2 van-accessible stalls. This is exceeded. 3 accessible stalls and 2 van-accessible stalls are provided.

- *"In addition to the vehicle parking requirements, the development should provide 17 secure indoor bike parking spaces."*

  This is exceeded. 40 secure indoor bike parking stalls are provided.

- *"Monitor queuing on eastbound McMillan Avenue west of Pembina Highway. If the combination of eastbound queuing and westbound parked vehicles temporarily block westbound vehicles on McMillan Avenue, the issue can be mitigated by a parking and loading prohibition on westbound McMillan Avenue for a short distance off Pembina Highway*."

  The Public Works Department is aware of this and plans to take appropriate action when and if required.

[1] According to Peg City Car Co-op, 1 car share vehicle typically offsets 9-13 private automobiles.

- *"Adjustments are recommended to the building garbage and recycling access to reduce the risk of encroachment on the sidewalk and boulevard on Gertrude Avenue."*

  Water and Waste states that truck access to the garbage and recycling bins is not sufficient for City collection further consultation with the applicant will be required. This will be dealt with at the building permit stage.

- *"Modify the north boulevard on Gertrude Avenue west of Osborne Street to create a three car public loading bay."*

  The Public Works Department concurs with the recommendation for a loading bay on the north side of Gertrude Avenue. The loading bay will provide a location for deliveries to load and unload without causing traffic operating and safety concerns on the adjacent road network. Details regarding the loading bay will be worked out at the building permit stage.

GERTRUDE TRAFFIC CALMING

Gertrude Street is the subject of a traffic calming project. The Public Works Department indicates that a public engagement process has taken place and that proposed designs are currently being finalized.

The Gertrude Traffic Calming Project aims to reduce traffic speeds along Gertrude and improve safety for street crossings at Gladstone School.

Works are planned for installation by the Department this year (2022).

SHADOW AND SUN

The Planning, Property and Development Department's Sun Shadow Study guidelines state that a proposed development should allow for approximately 5 consecutive hours of full sunlight cast on:

- Surrounding residential properties during spring and fall.
- A minimum of 50% of community outdoor amenity areas, including but not limited to children's play areas, school yards, tot lots, amenity areas associated with commercial and employment areas during spring and fall.
- The opposite boulevard including the full width of the sidewalk during spring and fall.
- A minimum of 50% of public open spaces, parks, plaza during spring and fall.

The applicant's submitted shadow study shows shadow impacts to be generally limited to the early morning hours. The study indicates that sun penetration exceeds the Department's guideline minimums.

Additional information on sun and shadow can be found in Schedule C: Applicant's Shadow Study.

SERVICING CONSIDERATIONS

The report of the Administrative Coordinating Group is attached as Schedule B. Highlights are:

PUBLIC WORKS DEPARTMENT

- The Developer will be required to construct a full width concrete sidewalk, and all related works along the full length of the Planned Area abutting Osborne Street.
- The Developer will be required to provide adjustments within the Osborne Street boulevard including but not limited to edge banding around past the proposed planters to the satisfaction of the Director of Public Works.
- The Developer will be required to pay to the City all costs associated with the installation of decorative lighting and all related works, within the boulevard of one or both sides of Osborne Street as determined by and to the satisfaction of the Public Works Department.
- The Developer will be required to construct a Portland cement concrete loading bay and all related works on the north side of Gertrude Avenue, between Osborne Street and the Public Lane, as determined by and to the satisfaction of the Public Works Department.

WATER AND WASTE DEPARTMENT

- There is adequate water servicing for the proposed development based on the development plans provided.
- The proposed development is located in a combined sewer district; the sum of the wastewater and land drainage runoff peak discharge from the proposed development cannot exceed the allowable discharge rate.

PUBLIC CONSULTATION

The applicant indicates the following regarding consultation (summarized):

Notification methods:

- Residents and businesses in the immediate vicinity of the project received hand delivered invites to stakeholder meetings.
- Other stakeholders (e.g. the Osborne Village BIZ and the Corydon-Osborne Community Voice) received notice via email or phone.
- For the public open houses, notices were delivered to the surrounding blocks and advertisements were taken out in The Sou'wester and shared on the Community Voice's Facebook Page.
- All display materials were posted on Landmark Planning's webpage, for those who may not have been able to attend the meetings or public open houses.

Round One

- November 9th, 2020 – 4 PM and 7 PM via Zoom
- Project team introduced the planning process, project timeline, anticipated next steps, and sought residents' input.
- Project team developed 3 preliminary concepts taking into account issues noted by residents.

Round Two

- February 8th, 2021 – 4 PM and 7 PM via Zoom
- Project team introduced 3 preliminary concepts, provided a progress update, and reviewed next steps.
- Residents, business owners and stakeholders were provided another opportunity to share input.
- A public open house was held that evening, in order to share the three concepts with larger Osborne Village community.

Round Three

- June 29th, 2021 1 PM, 4 PM, and 7 PM via Zoom
- Public open house for the larger Osborne Village community.
- Project team introduced the preferred design concept, shared the results of various background studies, shared how feedback was addressed, received input, and outlined next steps.

SUMMARY

The Urban Planning Division supports the subdivision and rezoning, because the development:

- Is mixed use, an ideal land use for this location on Osborne Street per *Complete Communities*.
- Provides ground-floor commercial development at a small storefront scale and rhythm – making connection with the historic commercial streetscape in Osborne Village.
- Represents a density increase in a key location on a Mixed Use Corridor, utilizes existing municipal infrastructure, and adds to the mix of housing types in the neighbourhood in a context sensitive manner in alignment with goals of *Complete Communities.*
- Meets the policies of the *Corydon-Osborne Area Plan* and the zoning regulations of the Corydon-Osborne PDO.
- Shows a high-quality architectural design, using façade materials (brick) traditional in the context.
- Adds vitality to the street through the addition of balconies, decks and patio spaces.
- Is not anticipated to cause major adverse impacts in terms of traffic, parking, and shadow.
- Is the product of in-depth public consultation.

This Report Submitted by:
Planning, Property and Development Department
Urban Planning Division
Report Prepared by: Andrew Ross RPP, MCIP
DASZ 36/2021 – 197-213 Osborne Street

Schedule “A” for File No. DASZ 36/21, City Centre Community Committee, February 1, 2022

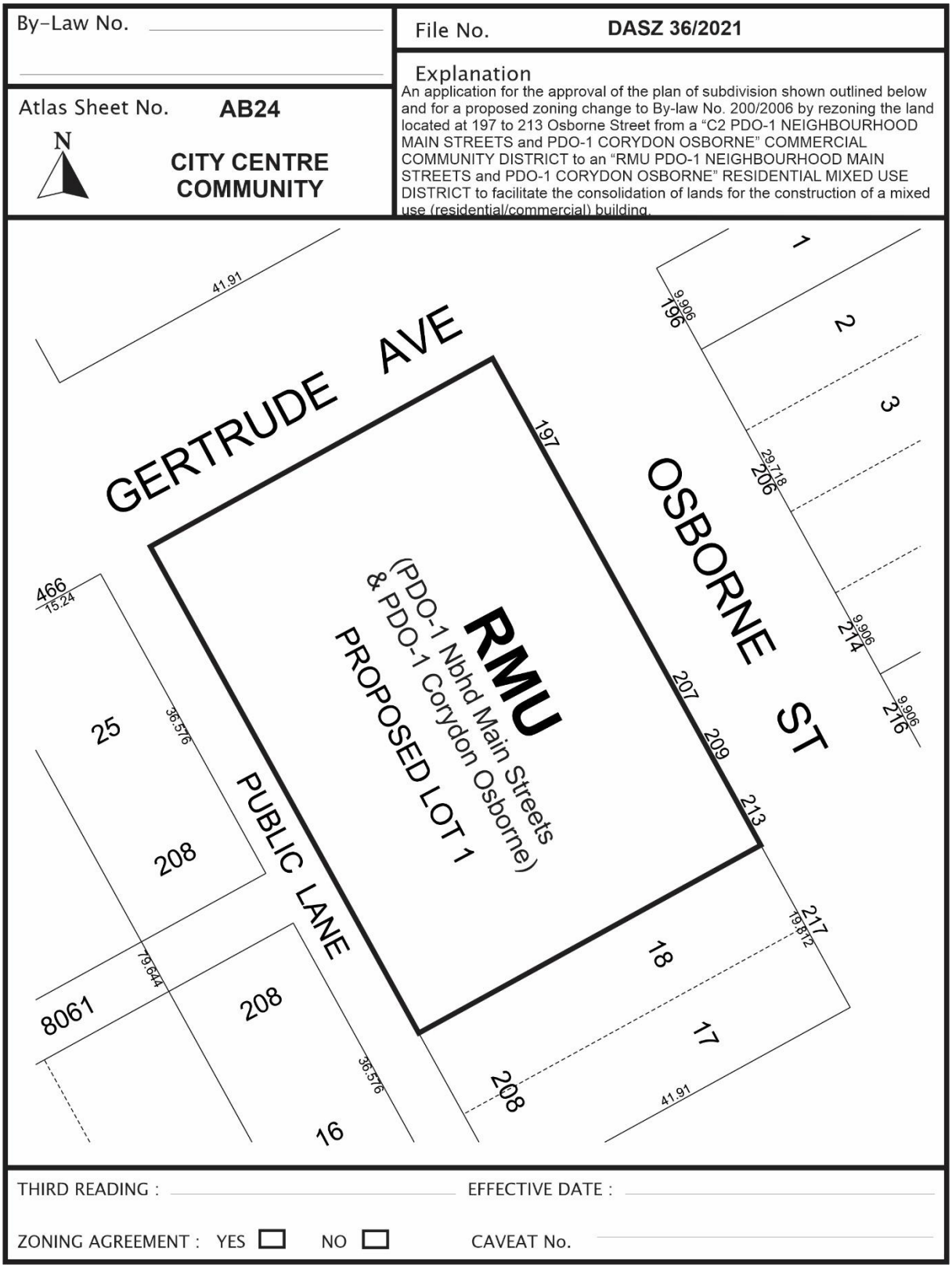

SCHEDULE B

REPORT OF THE ADMINISTRATIVE COORDINATING GROUP

RE: PROPOSED SUBDIVISION AND REZONING OF LAND LOCATED AT 197 TO 213 OSBORNE STREET

It is recommended that approval of DASZ 36/2021, if granted, be subject to the applicant addressing the following and entering into a Servicing Agreement containing the following conditions:

Section I – General Comments

1) The Water and Waste Department wishes to advise that there is adequate water servicing for the proposed development based on the development plans provided. Additional review will be required by their Department should the plans of development change during the process.

Section II - Servicing Conditions

1) Combined Sewer District

The proposed development is located in a combined sewer district; the sum of the wastewater and land drainage runoff peak discharge from the proposed development cannot exceed the allowable discharge rate:

i. The allowable discharge rate will be the sum of the existing peak wastewater and the peak land drainage discharged.

ii. The peak land drainage discharged from the site must be based on a c-value of 0.45, with a 5 year rainfall event applied.

iii. The existing and proposed peak wastewater discharge must be estimated using the Wastewater Flow Estimation guidelines found on the City of Winnipeg website (http://winnipeg.ca/waterandwaste/dept/wastewaterFlow.stm), unless otherwise approved.

2) Sidewalk

a) The Developer shall, at no expense to the City, construct a full width Portland cement concrete sidewalk, and all related works, including but not limited to adjustments to the edge banding as required, along the full length of the Planned Area abutting Osborne Street, all as determined by and to the satisfaction of the Director of Public Works.

b) The Developer shall, at no expense to the City, provide the necessary adjustments within the paved boulevard of Osborne Street, including but not limited to providing edge banding around and past the proposed planters, as required, to the satisfaction of the Director of Public Works.

3) Gertrude Avenue

The Developer shall, at no expense to the City, construct a Portland cement concrete loading bay and all related works on the north side of Gertrude Avenue, between Osborne Street and the Public Lane, all as determined by and to the satisfaction of the Director of Public Works.

4) Decorative Lighting

The Developer shall pay to the City, in cash, on demand, all costs associated with the installation of decorative lighting and all related works, within the boulevard of one or both sides of Osborne Street, as determined by and to the satisfaction of the Public Works Department.

5) Construction Traffic

a) The Developer shall, at no expense whatsoever to the City, ensure that construction traffic uses access routes determined by the Director of Public Works.

b) The Developer shall, at no expense whatsoever to the City, maintain the said access routes in a clean, dust-free condition, free of dropped and tracked-on mud; and shall undertake the regular cleaning, scraping and sweeping of those access routes and all streets until building construction within the Planned Area, including landscaping, is complete, all as determined by and to the satisfaction of the Director of Public Works.

6) Utilities

a) The Developer shall, at no expense to the City, cause underground electrical and telephone services to be installed to serve the Planned Area and will pay the full cost to convert any existing overhead services within the Planned Area to underground to the satisfaction of the Director of Public Works.

b) The Developer shall pay all costs associated with the relocation of street lights and other utilities made necessary as a result of, or required to accommodate, the works to be constructed by the Developer to serve the Planned Area, as determined by and to the satisfaction of the Director of Public Works.

7) Litter and Refuse Control and Clean-Up

a) The Developer shall, at no expense whatsoever to the City, and of its own volition, initiate and control the regular cleanup of litter and refuse from the contractors and builders for this development, both on-site and off-site, during the installation of services and construction of buildings, until substantial completion of all construction, as determined by and to the satisfaction of the Director of Public Works.

b) The cleanup of litter and refuse shall be done on a regular basis as determined by the Director of Public Works. This shall include initiating action and assuming any costs in remedying the situation to the satisfaction of the Director of Public Works.

8) Survey Monuments

a) Subsequent to completion of the Planned Area, as determined by the Director of Planning, Property and Development, the Developer shall pay the full costs of having all survey monuments within the Planned Area verified and restored as required by a Manitoba Land Surveyor and shall prepare a Plan of Survey Perpetuating Certain Monuments, confirming the position of all the survey monumentation within the Planned Area, for filing in The Property Registry.

b) Where the Director of Planning, Property and Development determines that all the survey monuments within the Planned Area have been found or restored to their original positions, the Director of Planning, Property and Development may waive the requirements for Plan of Survey Perpetuating Certain Monuments under clause a).

Section III – Costs and Fees

1) By-laws and Approvals

The Developer shall pay all of its and the City's costs, fees, and expenses associated with the preparation and attainment of approval for registration of the Zoning By-law(s) and plan(s) of subdivision, including all Municipal Board, Land Titles Office and other fees and expenses, all survey, engineering and advertising fees and costs, and all expenses incidental to the preparation of this Agreement and the physical development of the Planned Area.

2) Professional Fees

a) The Developer shall pay the full cost of all design services, including preliminary engineering studies, servicing reports, servicing criteria, construction drawings and specifications, and grading and landscaping plans and specifications, to be provided by Consulting Engineer(s) approved by the City, for the design of the municipal services, parklands, parkways and associated works required to serve the Planned Area;

b) The Developer shall pay the full cost of construction and landscaping supervision services provided by or on behalf of the City for field inspection, preparation of progress estimates, provision of as-built drawings by March 31 of the year following substantial performance of the work, and all other engineering consulting services related to the installation and acceptance of municipal services, and all associated works to serve the Planned Area.

3) Administration Fees

The Developer shall pay to the City, prior to the release of the subdivision mylars for registration in the Land Titles Office, an administration fee plus applicable GST to help defray the City's administration and related costs associated with the preparation and implementation of the Development Agreement.

THIS REPORT SUBMITTED BY:

Administrative Co-ordinating Group
File No. DASZ 36/2021
January 14, 2022

"*Original Signed by D. Trenchard"*
D. Trenchard, P. Eng.
Land Development Branch
Planning, Property and Development Department

"*Original Signed by M. Gajda"*
M. Gajda, P. Eng.
Engineering Division
Water and Waste Department

"*Original Signed by C. Desjardine"*
C. Desjardine, M. Sc., P. Eng.
Transportation Division
Public Works Department

Appendix B: Draft By-law

Schedule C: Applicant's Shadow Study

Exhibit “7” referred to in File DASZ 36/2021

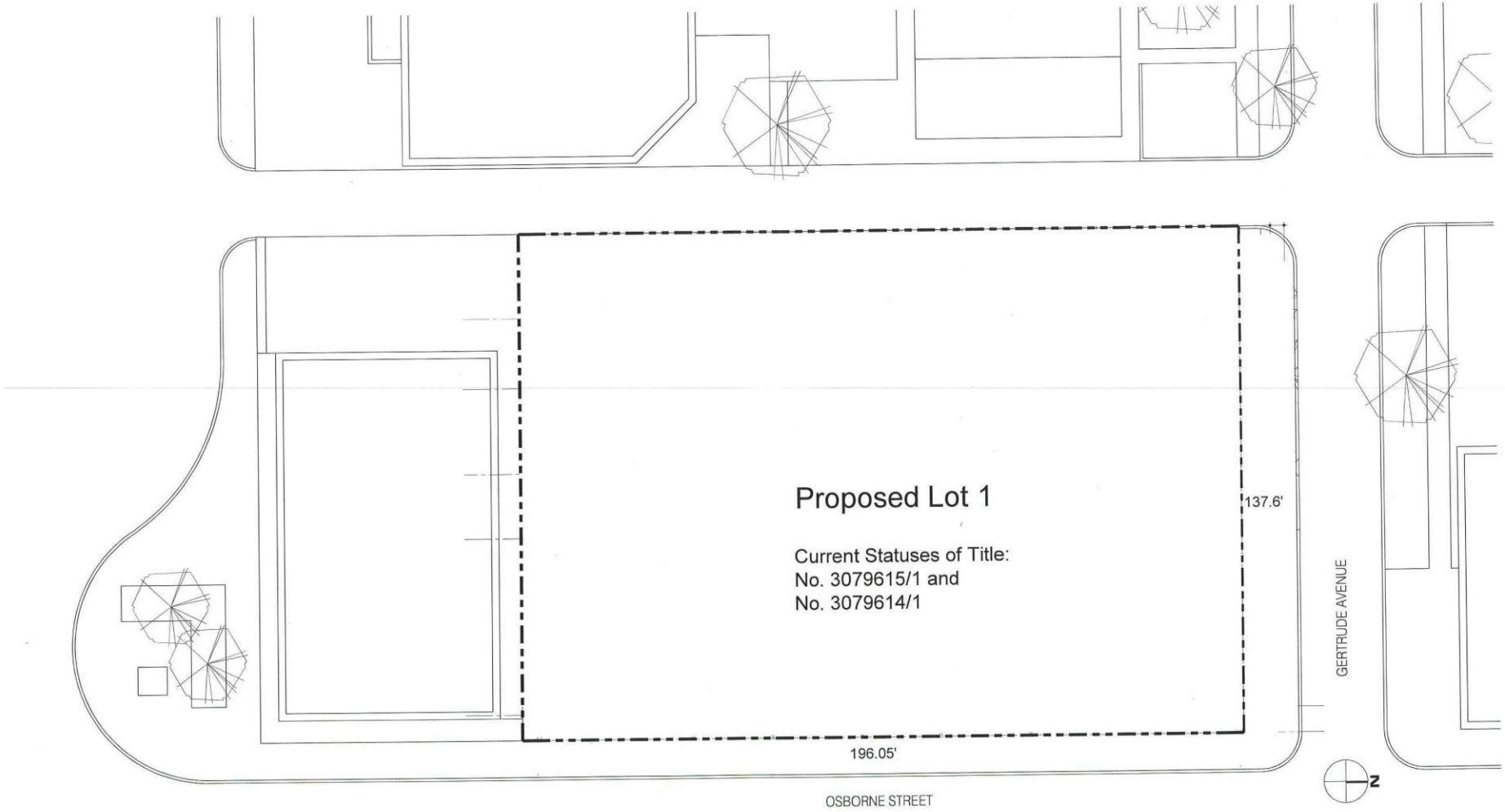

PLAN of SUBDIVISION

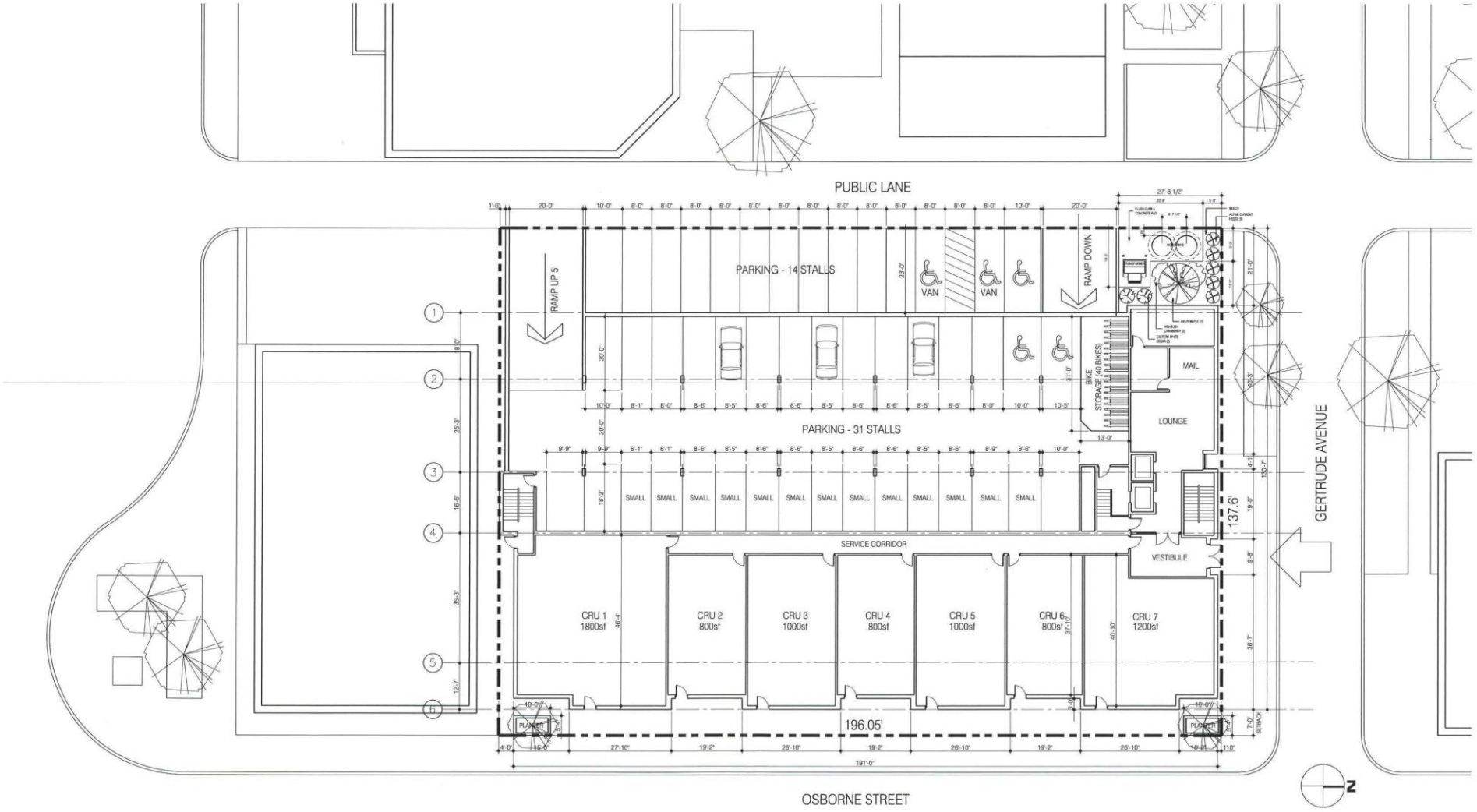

THIS DRAWING MUST NOT BE SCALED.

THE GENERAL CONTRACTOR SHALL VERIFY ALL DIMENSIONS, DATUMS, AND LEVELS PRIOR TO COMMENCEMENT OF WORK. ALL ERRORS AND OMISSIONS TO BE REPORTED TO NUMBER TEN ARCHITECTURAL GROUP BEFORE PROCEEDING.

VARIATIONS AND MODIFICATIONS TO WORK SHOWN ON THESE DRAWINGS SHALL NOT BE CARRIED OUT WITHOUT WRITTEN PERMISSION OF NUMBER TEN ARCHITECTURAL GROUP.

THIS DRAWING IS THE EXCLUSIVE PROPERTY OF NUMBER TEN ARCHITECTURAL GROUP AND THE COPYRIGHT IN THE SAME BEING RESERVED TO THEM. IT MAY BE REPRODUCED ONLY WITH THE PERMISSION OF NUMBER TEN ARCHITECTURAL GROUP, IN WHICH CASE THE REPRODUCTION MUST BEAR THEIR NAME.

project: OSBORNE STREET

sheet title: MAIN FLOOR PLAN

scale: 1/32" = 1'-0"

drawn by:

checked by:

date: JUNE 2021

project no. 2020036

sheet no. DA1

numberTEN
architectural group
winnipeg MB 204 942.0981 regina SK 306 721.1501 victoria BC 250 360.2106
architecture • interior design • graphic design

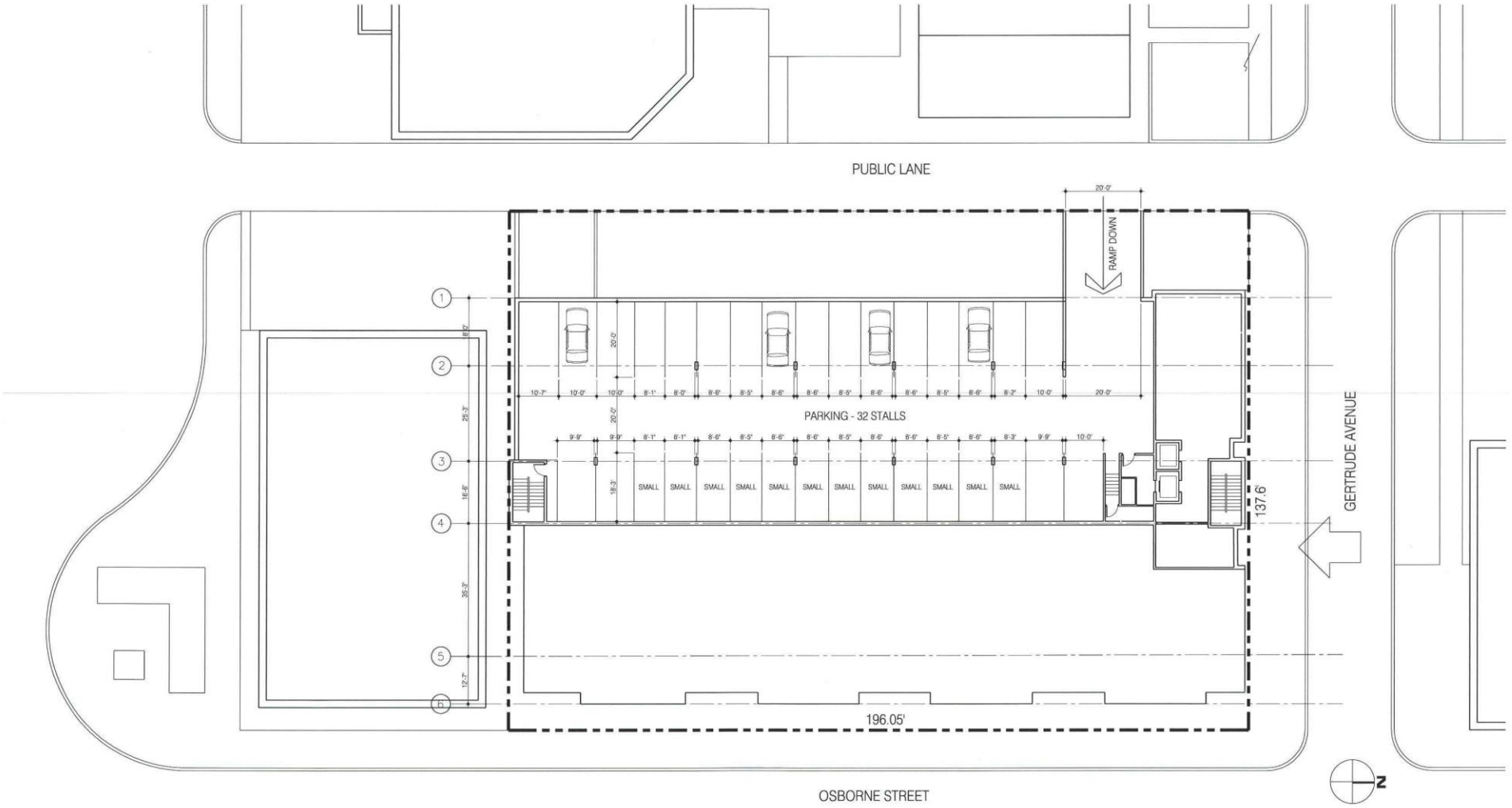

THIS DRAWING MUST NOT BE SCALED.

THE GENERAL CONTRACTOR SHALL VERIFY ALL DIMENSIONS, DATUMS, AND LEVELS PRIOR TO COMMENCEMENT OF WORK. ALL ERRORS AND OMISSIONS TO BE REPORTED TO NUMBER TEN ARCHITECTURAL GROUP BEFORE PROCEEDING.

VARIATIONS AND MODIFICATIONS TO WORK SHOWN ON THESE DRAWINGS SHALL NOT BE CARRIED OUT WITHOUT WRITTEN PERMISSION OF NUMBER TEN ARCHITECTURAL GROUP.

THIS DRAWING IS THE EXCLUSIVE PROPERTY OF NUMBER TEN ARCHITECTURAL GROUP AND THE COPYRIGHT IN THE SAME BEING RESERVED TO THEM. IT MAY BE REPRODUCED ONLY WITH THE PERMISSION OF NUMBER TEN ARCHITECTURAL GROUP, IN WHICH CASE THE REPRODUCTION MUST BEAR THEIR NAME.

project: OSBORNE STREET

sheet title: LOWER LEVEL PARKING

scale: 1/32" = 1'-0"

drawn by:

checked by:

date: JUNE 2021

project no. 2020036

sheet no. DA2

numberTEN
architectural group
winnipeg MB 204 942.0981 regina SK 306 721.1501 victoria BC 250 360.2106
architecture • interior design • graphic design



Building Description:	Building Areas:	Suite Breakdown:
90 Residential Units	Main Floor (excluding parking): 10,000 sf	10 Two Bedroom
6 Total Floors - 18 Suites Per Floor	Typical Residential Floor: 14,500 sf	5 One Bedroom
5 Residential Floors - 1 Commercial Floor	Total Residential: 72,300 sf	50 One Bedroom + Den
2 levels of Parking - 1 Level Partial Underground	Parking Area: 23,000 sf (two 11,500sf levels)	25 Studio
Parking Provided: 63 interior - 14 Exterior		
Parking Ratio: .86/suite - 25 Small Car Stalls (32%)		
Bicycle Parking: 40 bikes (two level racks)		

THIS DRAWING MUST NOT BE SCALED.

THE GENERAL CONTRACTOR SHALL VERIFY ALL DIMENSIONS, DATUMS, AND LEVELS PRIOR TO COMMENCEMENT OF WORK. ALL ERRORS AND OMISSIONS TO BE REPORTED TO NUMBER TEN ARCHITECTURAL GROUP BEFORE PROCEEDING.

VARIATIONS AND MODIFICATIONS TO WORK SHOWN ON THESE DRAWINGS SHALL NOT BE CARRIED OUT WITHOUT WRITTEN PERMISSION OF NUMBER TEN ARCHITECTURAL GROUP.

THIS DRAWING IS THE EXCLUSIVE PROPERTY OF NUMBER TEN ARCHITECTURAL GROUP AND THE COPYRIGHT IN THE SAME BEING RESERVED TO THEM. IT MAY BE REPRODUCED ONLY WITH THE PERMISSION OF NUMBER TEN ARCHITECTURAL GROUP, IN WHICH CASE THE REPRODUCTION MUST BEAR THEIR NAME.

project: OSBORNE STREET

sheet title: LEVELS 3 - 6 FLOOR PLAN

scale: 1/32" = 1'-0"

drawn by:

checked by:

date: JUNE 2021

project no. 2020036

sheet no. DA3

numberTEN architectural group
winnipeg MB 204 942.0981 regina SK 306 721.1501 victoria BC 250 360.2106
architecture • interior design • graphic design



THIS DRAWING MUST NOT BE SCALED.

THE GENERAL CONTRACTOR SHALL VERIFY ALL DIMENSIONS, DATUMS, AND LEVELS PRIOR TO COMMENCEMENT OF WORK. ALL ERRORS AND OMISSIONS TO BE REPORTED TO NUMBER TEN ARCHITECTURAL GROUP BEFORE PROCEEDING.

VARIATIONS AND MODIFICATIONS TO WORK SHOWN ON THESE DRAWINGS SHALL NOT BE CARRIED OUT WITHOUT WRITTEN PERMISSION OF NUMBER TEN ARCHITECTURAL GROUP.

THIS DRAWING IS THE EXCLUSIVE PROPERTY OF NUMBER TEN ARCHITECTURAL GROUP AND THE COPYRIGHT IN THE SAME BEING RESERVED TO THEM. IT MAY BE REPRODUCED ONLY WITH THE PERMISSION OF NUMBER TEN ARCHITECTURAL GROUP, IN WHICH CASE THE REPRODUCTION MUST BEAR THEIR NAME.

project: OSBORNE STREET

sheet title: SECOND FLOOR PLAN

scale: 1/32" = 1'-0"

drawn by:

checked by:

date: JUNE 2021

project no. 2020036

sheet no. DA4

numberTEN
architectural group
winnipeg MB 204 942.0981 regina SK 306 721.1501 victoria BC 250 360.2106
architecture • interior design • graphic design



EAST ELEVATION

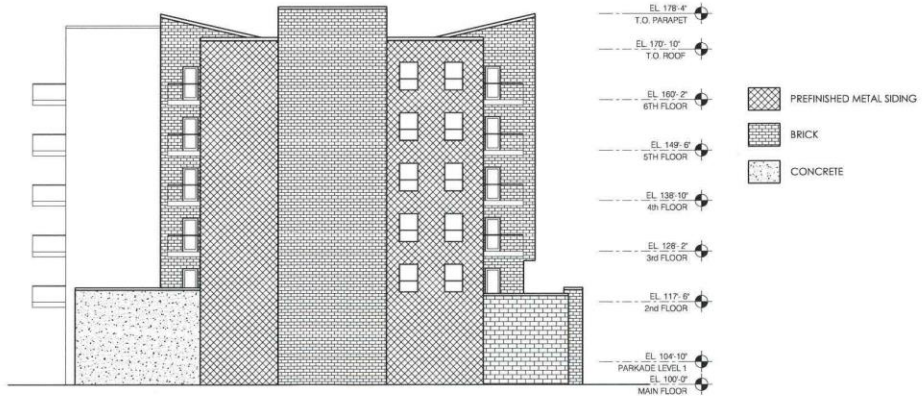

SOUTH ELEVATION

THIS DRAWING MUST NOT BE SCALED.

THE GENERAL CONTRACTOR SHALL VERIFY ALL DIMENSIONS, DATUMS, AND LEVELS PRIOR TO COMMENCEMENT OF WORK. ALL ERRORS AND OMISSIONS TO BE REPORTED TO NUMBER TEN ARCHITECTURAL GROUP BEFORE PROCEEDING.

VARIATIONS AND MODIFICATIONS TO WORK SHOWN ON THESE DRAWINGS SHALL NOT BE CARRIED OUT WITHOUT WRITTEN PERMISSION OF NUMBER TEN ARCHITECTURAL GROUP.

THIS DRAWING IS THE EXCLUSIVE PROPERTY OF NUMBER TEN ARCHITECTURAL GROUP AND THE COPYRIGHT IN THE SAME BEING RESERVED TO THEM. IT MAY BE REPRODUCED ONLY WITH THE PERMISSION OF NUMBER TEN ARCHITECTURAL GROUP, IN WHICH CASE THE REPRODUCTION MUST BEAR THEIR NAME.

project: OSBORNE STREET

sheet title: ELEVATIONS

scale: 1/32" = 1'-0"

drawn by:

checked by:

date: JUNE 2021

project no. 2020036

sheet no. DA5

numberTEN architectural group
winnipeg MB 204 942.0981 regina SK 306 721.1501 victoria BC 250 360.2106
architecture • interior design • graphic design



WEST ELEVATION

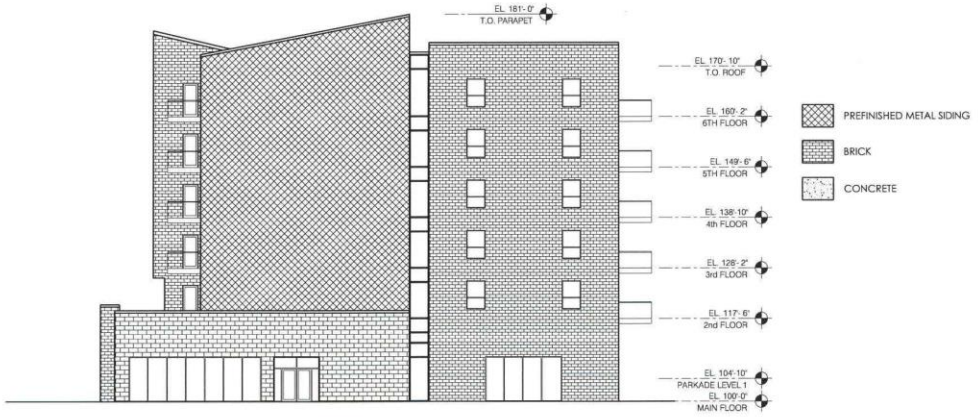

NORTH ELEVATION

THIS DRAWING MUST NOT BE SCALED.

THE GENERAL CONTRACTOR SHALL VERIFY ALL DIMENSIONS, DATUMS, AND LEVELS PRIOR TO COMMENCEMENT OF WORK. ALL ERRORS AND OMISSIONS TO BE REPORTED TO NUMBER TEN ARCHITECTURAL GROUP BEFORE PROCEEDING.

VARIATIONS AND MODIFICATIONS TO WORK SHOWN ON THESE DRAWINGS SHALL NOT BE CARRIED OUT WITHOUT WRITTEN PERMISSION OF NUMBER TEN ARCHITECTURAL GROUP.

THIS DRAWING IS THE EXCLUSIVE PROPERTY OF NUMBER TEN ARCHITECTURAL GROUP AND THE COPYRIGHT IN THE SAME BEING RESERVED TO THEM. IT MAY BE REPRODUCED ONLY WITH THE PERMISSION OF NUMBER TEN ARCHITECTURAL GROUP, IN WHICH CASE THE REPRODUCTION MUST BEAR THEIR NAME.

project: OSBORNE STREET

sheet title: ELEVATIONS

scale: 1/32" = 1'-0"

drawn by:

checked by:

date: JUNE 2021

project no. 2020036

sheet no. DA6

numberTEN
architectural group
winnipeg MB 204 942.0981 regina SK 306 721.1501 victoria BC 250 360.2106
architecture • interior design • graphic design

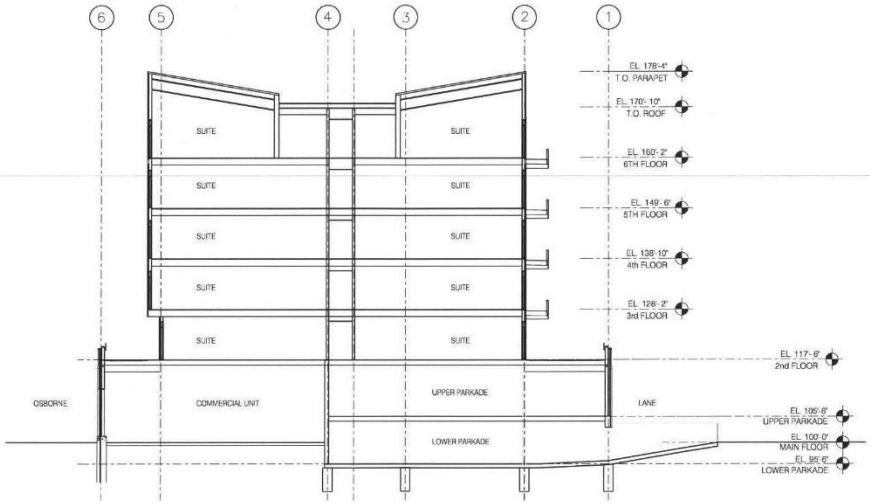

THIS DRAWING MUST NOT BE SCALED.

THE GENERAL CONTRACTOR SHALL VERIFY ALL DIMENSIONS, DATUMS, AND LEVELS PRIOR TO COMMENCEMENT OF WORK. ALL ERRORS AND OMISSIONS TO BE REPORTED TO NUMBER TEN ARCHITECTURAL GROUP BEFORE PROCEEDING.

VARIATIONS AND MODIFICATIONS TO WORK SHOWN ON THESE DRAWINGS SHALL NOT BE CARRIED OUT WITHOUT WRITTEN PERMISSION OF NUMBER TEN ARCHITECTURAL GROUP.

THIS DRAWING IS THE EXCLUSIVE PROPERTY OF NUMBER TEN ARCHITECTURAL GROUP AND THE COPYRIGHT IN THE SAME BEING RESERVED TO THEM. IT MAY BE REPRODUCED ONLY WITH THE PERMISSION OF NUMBER TEN ARCHITECTURAL GROUP, IN WHICH CASE THE REPRODUCTION MUST BEAR THEIR NAME.

project: OSBORNE STREET

sheet title: EAST - WEST BUILDING SECTION

scale: 1/32" = 1'-0"

drawn by:

checked by:

date: JUNE 2021

project no. 2020036

sheet no. DA7

numberTEN
architectural group
winnipeg MB 204 942.0981 regina SK 306 721.1501 victoria BC 250 360.2106
architecture • interior design • graphic design

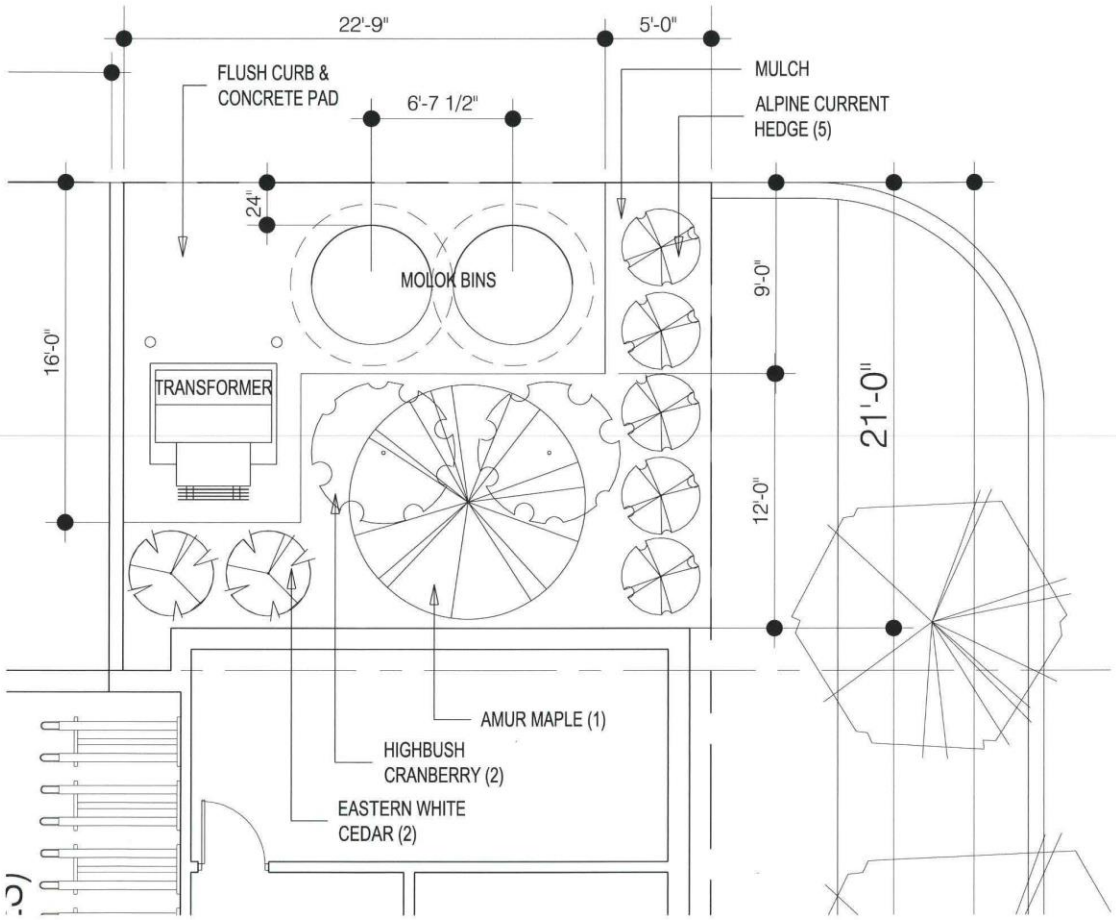

NORTH WEST CORNER

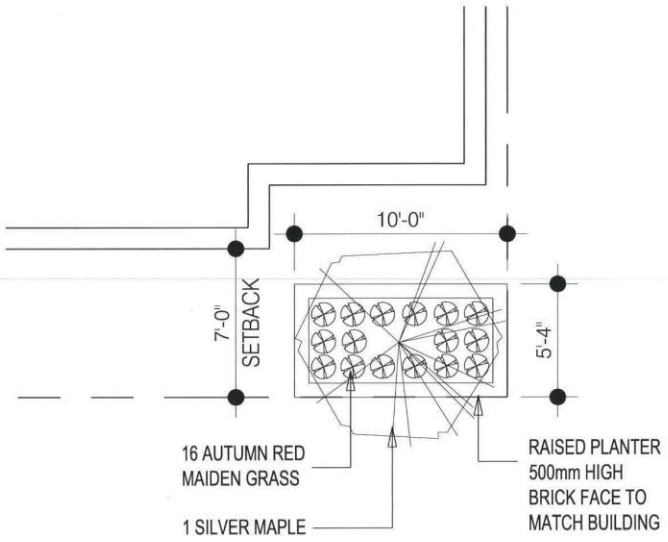

NORTH EAST CORNER

THIS DRAWING MUST NOT BE SCALED.

THE GENERAL CONTRACTOR SHALL VERIFY ALL DIMENSIONS, DATUMS, AND LEVELS PRIOR TO COMMENCEMENT OF WORK. ALL ERRORS AND OMISSIONS TO BE REPORTED TO NUMBER TEN ARCHITECTURAL GROUP BEFORE PROCEEDING.

VARIATIONS AND MODIFICATIONS TO WORK SHOWN ON THESE DRAWINGS SHALL NOT BE CARRIED OUT WITHOUT WRITTEN PERMISSION OF NUMBER TEN ARCHITECTURAL GROUP.

THIS DRAWING IS THE EXCLUSIVE PROPERTY OF NUMBER TEN ARCHITECTURAL GROUP AND THE COPYRIGHT IN THE SAME BEING RESERVED TO THEM. IT MAY BE REPRODUCED ONLY WITH THE PERMISSION OF NUMBER TEN ARCHITECTURAL GROUP, IN WHICH CASE THE REPRODUCTION MUST BEAR THEIR NAME.

project: OSBORNE STREET

sheet title: LANDSCAPE PLAN

scale: 3/16" = 1'-0"

drawn by:

checked by:

date: JUNE 2021

project no. 2020036

sheet no. DA8

numberTEN architectural group

winnipeg MB 204 942.0981 regina SK 306 721.1501 victoria BC 250 360.2106

architecture + interior design + graphic design


Shop
Shop
Shop
Shop


Shop
Shop
Shop
Shop
Shop
Shop


Shop
Shop
Shop


Shop


Shop
Shop
Shop
Shop


Shop
Shop
Shop
Shop
Shop


Shop
Shop
Shop
Shop
Shop
Shop
Shop


Shop
Shop
Shop

