Agenda – Council – May 26, 2022

Report – Standing Policy Committee on Property and Development, Heritage and Downtown Development – May 9, 2022

Item No. 13 Subdivision and Rezoning – 3707 Roblin Boulevard (Charleswood-Tuxedo-Westwood Ward) File DASZ 1/2022 [c/r DAV 102142/2022D]

STANDING COMMITTEE RECOMMENDATION:

On May 18, 2022, the Executive Policy Committee concurred in the recommendation of the Standing Policy Committee on Property and Development, Heritage and Downtown Development and submitted the following to Council:

1. That the subdivision under Development Application No. DASZ 1/2022 be approved for preparation as a plan of subdivision (the "Plan") by a Manitoba Land Surveyor in accordance with the map dated April 15, 2022 and attached as Schedule "A" and with the Proposed By-law attached as Appendix "B" to this report, with such changes as may be required, and registration in the Winnipeg Land Titles Office, subject to the following conditions:

    A. That the developer be required to enter into a Servicing Agreement with the City pursuant to subsection 259(1) of The City of Winnipeg Charter in accordance with the report of the Administrative Coordinating Group dated April 12, 2022 and attached as Schedule "B" to this report.

2. That the Winnipeg Zoning By-law No. 200/2006 be amended by rezoning the subject land to an "RMF-M" Residential Multi Family (Medium) District and "PR1" Parks and Recreation 1 District, as shown on the map dated April 15, 2022 and included within Schedule "A", subject to the following conditions:

    A. That the Owner enter into a Zoning Agreement with the City pursuant to subsection 240(1) of The City of Winnipeg Charter in accordance with the following:

        i. For those portions of the Owner's Land zoned "RMF-M" Residential Multi-Family (Medium) District, the Owner must submit plans showing the location and design of any and all proposed:

Report – Standing Policy Committee on Property and Development, Heritage and Downtown Development – May 9, 2022

STANDING COMMITTEE RECOMMENDATION (continued):

a. buildings
b. accessory parking areas
c. private approaches
d. garbage enclosures
e. fencing
f. landscaping
g. free-standing signage

on the Owner's Land ("Works") to the City's Director of Planning, Property and Development ("Director") and the Assiniboia Community Committee for approval prior to the issuance of any building or development permit, and thereafter must construct the Works in substantial conformance with the approved plans and maintain the Works to the satisfaction of the Director.

ii. That, for the portion of lands located north of the existing approach from Princeton Boulevard, building heights shall be limited to a maximum of 20 feet, as measured from grade to mid-point of a pitched roof.

3. That the City enter into, execute and deliver with the Developer:

A. a Servicing Agreement in accordance with Recommendation 1; and

B. a Zoning Agreement in accordance with Recommendation 2, and such other agreements as determined necessary by the City Solicitor/Director of Legal Services to implement the intent of the foregoing (the "Ancillary Agreements").

4. That authority be delegated to the City's Director of Planning, Property and Development (the "Director") to negotiate and approve the terms and conditions of the Servicing Agreement, the Zoning Agreement and any Ancillary Agreements in accordance with this report and such other terms and conditions determined necessary by the City Solicitor/Director of Legal Services to protect the interests of the City.

5. That, upon instruction from the Director of Planning, Property and Development, the Director of Legal Services/City Solicitor prepare a By-law in accordance with this report and bring same directly to Council for first reading at the next available Council meeting.

Report – Standing Policy Committee on Property and Development, Heritage and Downtown Development – May 9, 2022

STANDING COMMITTEE RECOMMENDATION (continued):

6. That upon instruction from the Director of Planning, Property and Development, the Director of Legal Services/City Solicitor be directed to return the By-law to Council to be given second and third reading to the By-law if a legal plan of subdivision (the "Plan"), prepared by the Manitoba Land Surveyor in accordance with Recommendations 1 and 6 of this Report, and all associated ancillary fees (the "Fees") are submitted to the City within 2 years after the By-law has been given first reading.

7. That the matter will be deemed to be concluded and all approvals in connection with this matter will expire if the Plan and all associated ancillary fees (the "Fees") are not submitted within 2 years after the By-law has been given first reading unless the developer applies for an extension of time before the expiration of the 2-year period and Council approves the extension.

8. That the subdivision section of the By-law will come into force when the Servicing Agreement is fully executed and the Plan is registered in the Winnipeg Land Titles Office.

9. That the zoning section of the By-law will come into force when the Zoning Agreement is registered in the Winnipeg Land Titles Office by way of caveat against the lands described therein.

10. That the By-law will be repealed without coming into force 1 year after the date it is enacted if the Plan and the Zoning Agreement are not registered in accordance with recommendations 8 and 9 unless the developer applies for an extension of time before the expiration of the 1-year period and Council approves the extension.

11. That this matter will be deemed to be concluded and all approvals in connection with this matter will expire if the necessary Plan approval signatures on behalf of the City have not been secured within 1 year after the date on which the By-law is enacted unless the developer applies for an extension of time before the expiration of the 1-year period and Council approves the extension.

12. That the Proper Officers of the City be authorized to do all things necessary to implement the intent of the foregoing.

13. That the variance order shall come into force and effect upon the coming into force and effect of the zoning by-law for the subject land under File DASZ 1/2022.

Report – Standing Policy Committee on Property and Development, Heritage and Downtown Development – May 9, 2022

DECISION MAKING HISTORY:

EXECUTIVE POLICY COMMITTEE RECOMMENDATION:

On May 18, 2022, the Executive Policy Committee concurred in the recommendation of the Standing Policy Committee on Property and Development, Heritage and Downtown Development and submitted the matter to Council.

STANDING COMMITTEE RECOMMENDATION:

On May 9, 2022, the Standing Policy Committee on Property and Development, Heritage and Downtown Development concurred in the recommendation of the Assiniboia Community Committee and submitted the matter to the Executive Policy Committee and Council.

COMMUNITY COMMITTEE RECOMMENDATION:

On April 27, 2022 the Assiniboia Community Committee concurred in the recommendation of the Winnipeg Public Service and forwarded the matter to the Standing Police Committee on Property and Development, Heritage and Downtown Development.

PUBLIC HEARING SUMMARY

File: DASZ 1/2022

Before: Assiniboia Community Committee
Councillor Gillingham, Chairperson
Councillor Klein
Councillor Lukes

Public Hearing: April 27, 2022
Council Building, 510 Main Street

Applicant: Articulated Design Union (Daniel MacGibbon)

Subject:

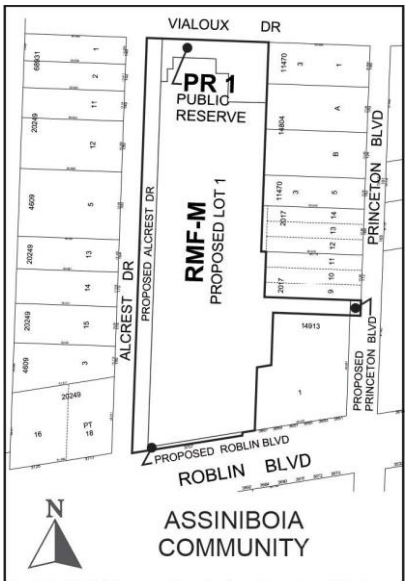

APPLICANT : Articulated Design Union (Daniel MacGibbon)
FILE : DASZ 1/2022
PROPOSAL : An application for the approval of the plan of subdivision shown outlined above as may be determined by Council and for a proposed zoning change to By-law No. 200/2006 by rezoning the land shown outlined above from a "PR2" PARKS AND RECREATION 2 (COMMUNITY) DISTRICT and an "R1-L" RESIDENTIAL SINGLE-FAMILY (LARGE) DISTRICT to an "RMF-M" RESIDENTIAL MULTI-FAMILY (MEDIUM) DISTRICT and a "PR1" PARKS AND RECREATION 1 (NEIGHBOURHOOD) DISTRICT to facilitate the establishment of a lot and Public Reserve and the widening of rights-of-way to allow the construction of a multi-family development. **For information, phone Mr. D. Clark, Planner at 204-986-5684.**

Premises Affected: 3707 Roblin Boulevard

For submission to: The Standing Policy Committee on Property and Development, Heritage and Downtown Development

Prepared by: L. Cowan, Senior Committee Clerk
Assiniboia Community Committee

Report date: April 29, 2022

Community Committee Recommendation:

On April 27, 2022, the Assiniboia Community Committee concurred in the recommendation of the Winnipeg Public Service and recommended to the Standing Policy Committee on Property and Development, Heritage and Downtown Development:

1. That the subdivision under Development Application No. DASZ 1/2022 be approved for preparation as a plan of subdivision (the "Plan") by a Manitoba Land Surveyor in accordance with the map dated April 15, 2022 and attached as Schedule "A" and with the Proposed By-law attached as Appendix "B" to this report, with such changes as may be required, and registration in the Winnipeg Land Titles Office, subject to the following conditions:

    A. That the developer be required to enter into a Servicing Agreement with the City pursuant to subsection 259(1) of The City of Winnipeg Charter in accordance with the report of the Administrative Coordinating Group dated April 12, 2022 and attached as Schedule "B" to this report.

2. That the Winnipeg Zoning By-law No. 200/2006 be amended by rezoning the subject land to an "RMF-M" Residential Multi Family (Medium) District and "PR1" Parks and Recreation 1 District, as shown on the map dated April 15, 2022 and included within Schedule "A", subject to the following conditions:

    A. That the Owner enter into a Zoning Agreement with the City pursuant to subsection 240(1) of The City of Winnipeg Charter in accordance with the following:

        i. For those portions of the Owner's Land zoned "RMF-M" Residential Multi-Family (Medium) District, the Owner must submit plans showing the location and design of any and all proposed:

            a. buildings
            b. accessory parking areas
            c. private approaches
            d. garbage enclosures
            e. fencing

f. landscaping
g. free-standing signage

on the Owner's Land ("Works") to the City's Director of Planning, Property and Development ("Director") and the Assiniboia Community Committee for approval prior to the issuance of any building or development permit, and thereafter must construct the Works in substantial conformance with the approved plans and maintain the Works to the satisfaction of the Director.

ii. That, for the portion of lands located north of the existing approach from Princeton Boulevard, building heights shall be limited to a maximum of 20 feet, as measured from grade to mid-point of a pitched roof.

3. That the City enter into, execute and deliver with the Developer:

A. a Servicing Agreement in accordance with recommendation 1; and

B. a Zoning Agreement in accordance with recommendation 2, and such other agreements as determined necessary by the City Solicitor/Director of Legal Services to implement the intent of the foregoing (the "Ancillary Agreements").

4. That authority be delegated to the City's Director of Planning, Property and Development (the "Director") to negotiate and approve the terms and conditions of the Servicing Agreement, the Zoning Agreement and any Ancillary Agreements in accordance with this report and such other terms and conditions determined necessary by the City Solicitor/Director of Legal Services to protect the interests of the City.

5. That, upon instruction from the Director of Planning, Property and Development, the Director of Legal Services/City Solicitor prepare a By-law in accordance with this report and bring same directly to Council for first reading at the next available Council meeting.

6. That upon instruction from the Director of Planning, Property and Development, the Director of Legal Services/City Solicitor be directed to return the By-law to Council to be given second and third reading to the By-law if a legal plan of subdivision (the "Plan"), prepared by the Manitoba Land Surveyor in accordance with Recommendations 1 and 6 of this Report, and all associated ancillary fees (the "Fees") are submitted to the City within 2 years after the By-law has been given first reading.

7. That the matter will be deemed to be concluded and all approvals in connection with this matter will expire if the Plan and all associated ancillary fees (the "Fees") are not submitted within 2 years after the By-law has been given first reading unless the developer applies for an extension of time before the expiration of the 2-year period and Council approves the extension.

8. That the subdivision section of the By-law will come into force when the Servicing Agreement is fully executed and the Plan is registered in the Winnipeg Land Titles Office.

9. That the zoning section of the By-law will come into force when the Zoning Agreement is registered in the Winnipeg Land Titles Office by way of caveat against the lands described therein.

10. That the By-law will be repealed without coming into force 1 year after the date it is enacted if the Plan and the Zoning Agreement are not registered in accordance with recommendations 8 and 9 unless the developer applies for an extension of time before the expiration of the 1-year period and Council approves the extension.

11. That this matter will be deemed to be concluded and all approvals in connection with this matter will expire if the necessary Plan approval signatures on behalf of the City have not been secured within 1 year after the date on which the By-law is enacted unless the developer applies for an extension of time before the expiration of the 1-year period and Council approves the extension.

12. That the Proper Officers of the City be authorized to do all things necessary to implement the intent of the foregoing.

13. That the variance order shall come into force and effect upon the coming into force and effect of the zoning by-law for the subject land under File DASZ 1/2022.

The Assiniboia Community Committee provided the following supporting reasons for its recommendation:

1. This is an incredible development to support the ageing community of Charleswood.

2. Today we see Stats Canada coming out showing the demographics and what's happening in our City for ageing populations.

3. This is in a beautiful location and this supports exactly what OurWinnipeg and Complete Communities set out to do. And it is challenging for sure. It's challenging doing development, it's challenging doing infill, any kind of development, because what it does is it represents change. But the demographics, what's happening in our neighbourhoods, it's happening across Canada with the need for housing. It may not seem like it right now but the tsunami, the grey tsunami is coming and I think this is a beautiful development to keep people in Charleswood.

Objections under the Charter:

Total number of **v**alid objections as per section 125(2) – 13

In accordance with section 236.1(1), the threshold for sufficient objection has not been met.

Exhibits Filed:

1. Application dated January 28, 2022
2. Notification of Public Hearing dated March 21, 2022
3. Manitoba Status of Titles 3013951/1, and 3013950/1
4. Manitoba Certificate of Title 2275338
5. Letter of authorization dated October 13, 2021 from City of Winnipeg to Tuxedo Lands Ltd.
6. Letter of authorization dated December 17, 2021 from Tuxedo Lands Ltd. (Myles Kraut) to Daniel MacGibbon
7. Surveyor's sketch dated October 18, 2021
8. Sanitary Sewer Design Sheets
9. Preliminary Wastewater and Sewer Concept Plan dated February 18, 2021
10. Plans (15 pages)
11. 3707 Roblin Boulevard Community Engagement Report dated June, 2021
12. Report from the Urban Planning Division dated April 15, 2022
13. Inspection Report
14. Communication dated April 12, 2022 from Belle Cameron in opposition to the application
15. Communication dated April 12, 2022 from Cathy Buttazoni in opposition to the application
16. Communication dated April 14, 2022 from Harold Lipps in opposition to the application
17. Communication dated April 14, 2022 from Irene Lipps in opposition to the application
18. Communication dated April 21, 2022 from Phillip Dunphy in support of the application
19. Communication dated April 25, 2022 from James G. Nowell in opposition to the application
20. Communication dated April 26, 2022 from Lisa and Anthony Newcombe in opposition to the application
21. Communication dated April 26, 2022 from Michael Boyle in opposition to the application
22. Communication dated April 26, 2022 from Daniel MacGibbon in support of the application
23. Communication dated April 26, 2022 from David Ramsay in opposition to the application
24. Communication dated April 26, 2022 from Cathy Gardiner in opposition to the application

Exhibits Filed (continued):

25. Communication dated April 26, 2022 from Braydin Huynen in support of the application
26. Communication dated April 25, 2022 from Kathryn Gibbings in opposition to the application
27. Communication dated April 27, 2022 from Tony Jamieson in opposition to the application
28. Recording of Representations

REPRESENTATIONS:

In Support:

Stephen Chapman
Phillip Dunphy
Braydin Huynen
Myles Kraut
Daniel MacGibbon
Yaron Walter

In Opposition:

Randy Aitken
Michael Boyle
Cathy Buttazoni
Belle Cameron
Cathy Gardiner
Kathryn Gibbings
Tony Jamieson
Harold Lipps
Irene Lipps
Anthony Newcombe
Lisa Newcombe
James G. Nowell
David Ramsay
Michele Shabaga

For Information:

Robert Dwayne Huot

For the City:

D. Clark, Planner, Planning, Property and Development Department
D. Patman, Manager of Transportation, Public Works Department
D. Trenchard, Land Development Engineer, Planning, Property and Development Department

Exhibit "12" referred to in File DASZ 1/2022

ADMINISTRATIVE REPORT

Title: DASZ 1/2022 – 3707 Roblin Blvd.

Issue: For consideration at the Public Hearing for an application to subdivide and rezone the property to the RMF-M zoning district and PR-1 zoning district for the purpose of establishing a multi-unit residential development.

Critical Path: Assiniboia Community Committee → Standing Policy Committee on Property and Development, Heritage and Downtown Development → Executive Policy Committee → Council as per the Development Procedures By-law and *The City of Winnipeg Charter.*

AUTHORIZATION

Author	Department Head	CFO	CAO
D. Clark, RPP, MCIP	n/a	n/a	

RECOMMENDATIONS

1. That the subdivision under Development Application No. DASZ 1/2022 be approved for preparation as a plan of subdivision (the "Plan") by a Manitoba Land Surveyor in accordance with the map dated April 15, 2022 and attached as Schedule "A" and with the Proposed By-law attached as Appendix "B" to this report, with such changes as may be required, and registration in the Winnipeg Land Titles Office, subject to the following conditions:

    A. That the developer be required to enter into a Servicing Agreement with the City pursuant to subsection 259(1) of The City of Winnipeg Charter in accordance with the report of the Administrative Coordinating Group dated April 12, 2022 and attached as Schedule "B" to this report.

2. That the Winnipeg Zoning By-law No. 200/2006 be amended by rezoning the subject land to an "RMF-M" Residential Multi Family (Medium) District and "PR1" Parks and Recreation 1 District, as shown on the map dated April 15, 2022 and included within Schedule "A", subject to the following conditions:

    A. That the Owner enter into a Zoning Agreement with the City pursuant to subsection 240(1) of The City of Winnipeg Charter in accordance with the following:

i. {For those portions of the Owner's Land zoned "RMF-M" Residential Multi-Family (Medium) District}, the Owner must submit plans showing the location and design of any and all proposed:

(a) buildings;

(b) accessory parking areas;

(c) private approaches;

(d) garbage enclosures;

(e) fencing;

(f) landscaping; and

(g) free-standing signage

on the Owner's Land ("Works") to the City's Director of Planning, Property and Development ("Director") and the Assiniboia Community Committee for approval prior to the issuance of any building or development permit, and thereafter must construct the Works in substantial conformance with the approved plans and maintain the Works to the satisfaction of the Director.

ii. That, for the portion of lands located north of the existing approach from Princeton Boulevard, building heights shall be limited to a maximum of 20 feet, as measured from grade to mid-point of a pitched roof.

3. That the City enter into, execute and deliver with the Developer

A. a Servicing Agreement in accordance with recommendation 1; and

B. a Zoning Agreement in accordance with recommendation 2,

and such other agreements as determined necessary by the City Solicitor/Director of Legal Services to implement the intent of the foregoing (the "Ancillary Agreements").

4. That authority be delegated to the City's Director of Planning, Property and Development (the "Director") to negotiate and approve the terms and conditions of the Servicing Agreement, the Zoning Agreement and any Ancillary Agreements in accordance with this report and such other terms and conditions determined necessary by the City Solicitor/Director of Legal Services to protect the interests of the City.

5. That, upon instruction from the Director of Planning, Property and Development, the Director of Legal Services/City Solicitor prepare a By-law in accordance with this report and bring same directly to Council for first reading at the next available Council meeting.

6. That upon instruction from the Director of Planning, Property and Development, the Director of Legal Services/City Solicitor be directed to return the By-law to Council to be given second and third reading to the By-law if a legal plan of subdivision (the "Plan"), prepared by the Manitoba Land Surveyor in accordance with Recommendations 1 and 6

of this Report, and all associated ancillary fees (the “Fees”) are submitted to the City within 2 years after the By-law has been given first reading.

7. That the matter will be deemed to be concluded and all approvals in connection with this matter will expire if the Plan and all associated ancillary fees (the “Fees”) are not submitted within 2 years after the By-law has been given first reading unless the developer applies for an extension of time before the expiration of the 2 year period and Council approves the extension.

8. That the subdivision section of the By-law will come into force when the Servicing Agreement is fully executed and the Plan is registered in the Winnipeg Land Titles Office.

9. That the zoning section of the By-law will come into force when the Zoning Agreement is registered in the Winnipeg Land Titles Office by way of caveat against the lands described therein.

10. That the By-law will be repealed without coming into force 1 year after the date it is enacted if the Plan and the Zoning Agreement are not registered in accordance with recommendations 8 and 9 unless the developer applies for an extension of time before the expiration of the 1 year period and Council approves the extension.

11. That this matter will be deemed to be concluded and all approvals in connection with this matter will expire if the necessary Plan approval signatures on behalf of the City have not been secured within 1 year after the date on which the By-law is enacted unless the developer applies for an extension of time before the expiration of the 1 year period and Council approves the extension.

12. That the proper officers of the City be authorized to do all things necessary to implement the intent of the foregoing.

13. That the variance order shall come into force and effect upon the coming into force and effect of the zoning by-law for the subject land under File DASZ 1/2022;

REASON FOR THE REPORT

- Subdivision and Rezoning applications require a Public Hearing as per the *Development Procedures By-law* and *The City of Winnipeg Charter.*
- The Report is being submitted for the Committee’s consideration of the development application at the Public Hearing.

IMPLICATIONS OF THE RECOMMENDATIONS

- *If the recommendations of the Winnipeg Public Service are concurred in, the subject property may be subdivided and rezoned consistent with the map provided in Schedule “A” of this report.*

CONSULTATION

In preparing this Report there was consultation with: N/A

OURWINNIPEG POLICY ALIGNMENT

The proposed development aligns with *OurWinnipeg* through the following directions and policies:

01-1b Key Directions for the Entire City

- *Dynamically integrate transportation with land use.*
- *Create a safe, efficient and equitable transportation system for people, goods and services.*
- *Create a transportation system that supports active, accessible and healthy lifestyle options.*

01-1c Key Directions for Specific City Area's – Areas of Stability

- *Enhance the quality, diversity, completeness and sustainability of stable neighbourhoods and expand housing options for Winnipeg's changing population.*

01-1c Key Directions for Specific City Area's – Centres and Corridors

- *Focus a significant share of growth to Centres and Corridors in a manner that: • provides compact, mixed-use, high-quality urban development. • concentrates people and jobs in areas well-served by the primary transit service, located close to transit stops. • concentrates urban development in a built form that helps to optimize existing investment, municipal infrastructure, and facilities. • encourages a built form that supports a pedestrian friendly environment while incorporating climate sensitive site and building design.*

Section 01, Direction 3:

- *Promote Compact Urban Form and Manage the Extension of Municipal Services for New Growth.*

01-4 Housing Direction 1

- *Support diverse housing options in each neighbourhood or neighbourhood cluster throughout the city.*

Section 03-1, Direction 9

- *Collaborate with developers, community organizations and other partners to foster an age-friendly and accessible urban environment. With guidance from Complete Communities, encourage age-friendly and accessible new development in existing neighbourhoods.*

The following excerpts from *OurWinnipeg* are also relevant to the proposed development.

- *City Building - Create Complete Communities - Our communities need to support various lifestyles, providing a range of options for living, working and playing. The daily necessities of life should be within reach, with options for accessing services, amenities*

and resources like grocery stores, banks and restaurants, together with community centres, schools and day care centres. These complete communities should provide a range of housing options to accommodate various incomes, household types, abilities and stages of life (p.25)

- *Connect and Expand our Sustainable Transportation and Infrastructure Networks Ensuring mobility for people of all ages and abilities and for goods and services is an important part of improving our social, environmental and economic sustainability. Options for getting around are important to remaining livable, desirable and affordable in the future – options like enhanced public transit and active transportation routes that support walking, cycling and other human powered forms of transportation* (p.25)

WINNIPEG CLIMATE ACTION PLAN ALIGNMENT

One of the Vision Statement's in the Climate Action Plan is that:

> *Winnipeg facilitates compact development and healthy neighbourhoods that are connected through a network of active and transit-oriented mobility options. This means that the City strategically integrates climate action within both land use and transportation decision-making.*

Strategic Opportunity #3 *Advancing Sustainable Transportation – Increasing Mobility Options and Shift to Zero Emission Vehicles*

> *Increasing access to mobility options and fuel switching are key directions for reducing emissions from transportation. Key directions aim to directly shift residents out of single occupancy vehicles through sustainable transportation options with lower or no emissions (walking, cycling, public transit, carshare, and carpooling) or indirectly enable diverse mobility choices through the development of higher density, and more complete communities* (p.vi)
>
> *3.1 Increase Use and Efficiency of Public Transit Systems*
>
> *3.2 Increase the Density of Urban Development Along Key Transit Corridors.*

Strategic Opportunity #4 *Facilitate Compact, Complete Development and Increase Density*

> *4.1 Increase Strategic Infill Development that Provides Access to and Capitalizes on Existing and Planned Corridors with Frequent Transit Service*
>
> *4.3 Pursue Transit-Oriented Development*

WINNIPEG POVERTY REDUCTION STRATEGY ALIGNMENT

Consideration was given as to whether this report connects to any of the specific Goals and Objectives in the PRS and it was determined that the PRS is not applicable to this specific report.

SUBMITTED BY

Department	Planning, Property and Development
Division	Urban Planning
Prepared by	D. Clark, RPP, MCIP
Date:	April 15,2022
File No.	DASZ 1/2022

List of Schedules and Attachments

- **Appendix "A," Planning Discussion.**
- **Appendix "B," Proposed By-law**
- **Schedule "A," of File** DASZ 1/2022**,** Assiniboia **Community Committee, dated April 15,** 2022**.**
- **Schedule "B," Report of the Administrative Co-ordinating group, dated April 12, 2022, Re: Proposed Subdivision and Rezoning of land located at 3707 Roblin Blvd.**

APPENDIX 'A'

DATE:	April 15, 2022
FILE:	**DASZ 1/2022**
RELATED FILES:	DAV 22-102142D
COMMUNITY:	Assiniboia Community
NEIGHBOURHOOD #:	2.630 (Vialoux)

SUBJECT: For consideration at the public hearing for a subdivision and rezoning that consolidates two lots then re-subdivides the lot into two different lots, establishing zoning Lot 1 as RMF-M and zoning Lot 2 as PR1.

LOCATION: 3707 Roblin Blvd.

LEGAL DESCRIPTION: SP LOT 19 & 20 PLAN 20249 WLTO IN RL 30 TO 37 PARISH OF ST.CHARLES

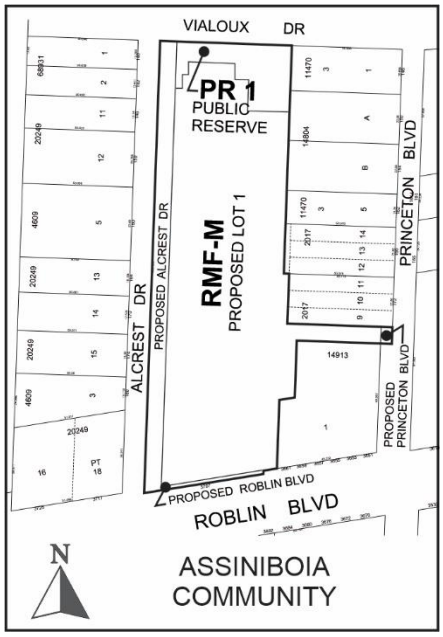

APPLICANT: Articulated Design Union (Daniel MacGibbon)
673 Mulvey Ave.
Winnipeg, MB R3M 1G2

OWNER: Tuxedo Lands Ltd.
3676 Roblin Blvd.
Winnipeg, MB R3R 0E1

RECOMMENDATION: Approval with Conditions

HISTORY

N/A

DISCUSSION

SITE DESCRIPTION

- The subject site is located on the north side of Roblin Blvd. in the Vialoux Neighbourhood of the Charleswood – Tuxedo – Westwood Ward.
- The subject site is comprised of two lots. Lot 1 (former Chapman school site) has a total lot area of 134,904 (3.09 acres) and Lot 2 (a small undeveloped City owned parcel that fronts onto Roblin) has a total lot area of 2,410 sq. ft.
- The school site is zoned "PR2" Parks and Recreation 2 and the City owned parcel is split zoned between the "PR2" zoning district and the Residential Single-Family Large "R1-L" district.
- The site is located within the Community Mixed Use Corridors Policy Area and Areas of Stability – Recent Communities Policy Area under *the Complete Communities Direction Strategy*.



Figure 1: Aerial Photo of Subject Site and Surrounding Uses *(flown 2021)*

SURROUNDING LAND USE AND ZONING (See Figure 2)

North: Vialoux Drive then single-family dwellings zoned “R1-L” Residential Single Family - Large

South: Roblin Blvd. then commercial uses zoned “C2” Community Commercial.

East: commercial uses zoned “C2” Community Commercial and single-family dwellings zoned “R1-L” Residential Single Family – Large.

West: Alcrest Drive then single-family dwellings zoned “R1-L” Residential Single Family - Large

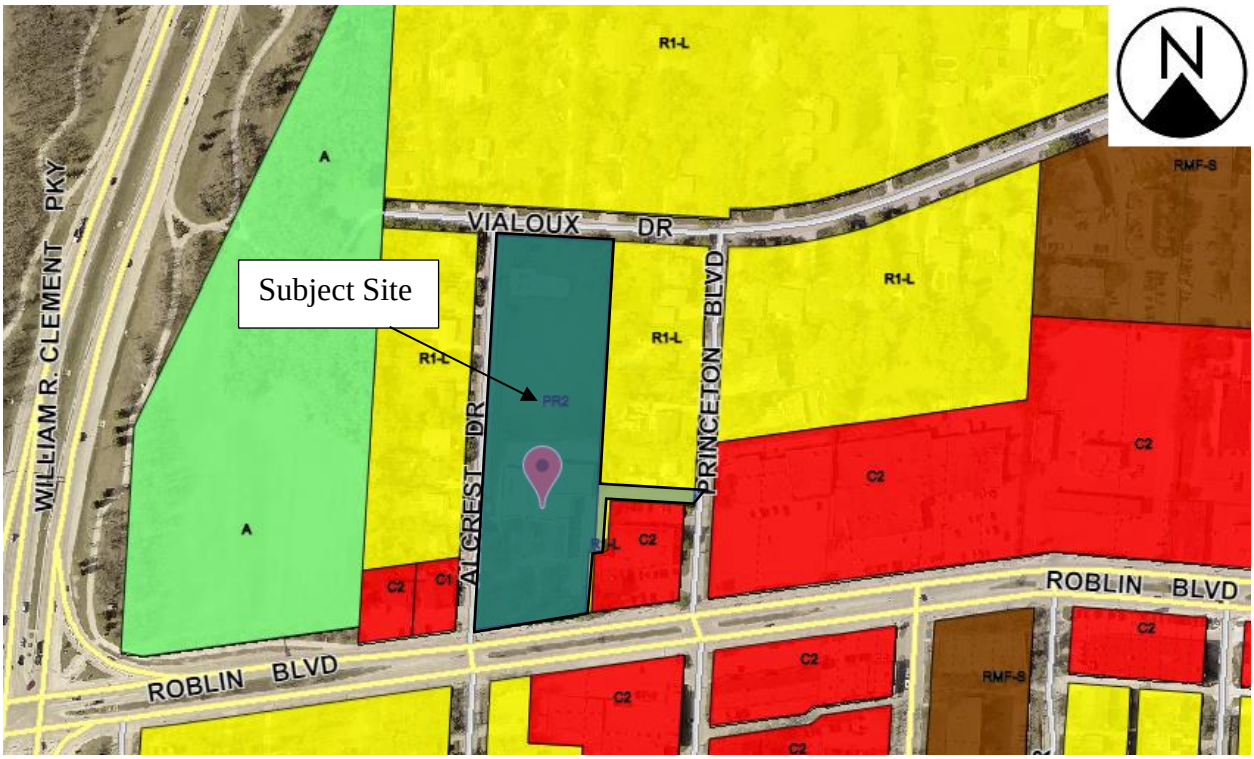

Figure 2: Zoning of the site and surrounding area.

DESCRIPTION OF THE PROPOSED DEVELOPMENT

- **The proposed development involves the consolidation of 2 lots into 1 lot and rezoning to the RMF-M “Residential Multi Family - Medium” zoning district. The proposal also includes subdividing land at the north portion of the site and rezoning to the PR-1 Parks and Recreation (Neighbourhood) Zoning District.**
- **The current lot area of the school site is 134,904 sq. ft. (3.1 acres).**
- A piece of City owned property (Roll number 01001433600) that abuts the subject site is being purchased by the applicant and consolidated with the former school lands. This area of land is 2,140 sq. ft. and is currently split zoned as PR2 and R1-L.
- As such, the total consolidated land size is 137,044 square feet (3.15 acres).
- However, the overall developable site will be less than 137,044 square feet as a result of three site considerations.

1) **Alcrest Drive is required to be widened and land for parks is being taken rather than cash in lieu.**
    - A 26' ½" wide portion of land along the Alcrest roadway has been identified by Public Works as necessary to bring the road right-of-way width for Alcrest into compliance with current City of Winnipeg road right of way standards. In total, this equates to a reduction of **18,425.9 square feet (.423 acres).**
2) An area of 10,647 sq. ft. of land adjacent to Vialoux Dr. is to be retained to satisfy the land dedication requirements, with the intent of preserving green space and mature trees on site.
3) A 5-foot-wide strip of land has also been identified by Public Works as being required for a widening of the road right-of-way along Roblin Boulevard. This is required for approximately 180 feet of frontage, resulting in a total area of 900 square feet.

- As such, the total developable land of the site is brought down to 107,071 square feet.
- A six storey building with a footprint of 17,834 square feet is proposed at the front portion of the site, situated closer to Roblin Blvd. This building is to have 60 units contained within it.
- Four single storey, five-unit bungalow condos (total of 20 units) are proposed within the back portion of the land. The bungalow condos measure 20 feet in height to the mid-point of the pitched roof.
- A total of 120 vehicle parking stalls are proposed for the entire site. 5 barrier free parking stalls including 2 van accessible stalls are provided.
- 10 bicycle parking stalls are proposed in the current concept plans.
- The proposal indicates landscaping in excess of the Zoning By-law minimum requirements.
- **The proposed development requires variances related to yard setbacks to portions of buildings, parking areas and a garbage enclosure. See file DAV 22-102142D for further details.**

Background and Collaboration:

- **The applicant applied for a pre-application to explore the development potential for this site. Further to the pre-app, the applicant engaged in follow up discussions regarding modifications made to the buildings and site plan to address concerns raised by various departments.**

ANALYSIS AND ISSUES

OUR WINNIPEG

Key policies applicable to the proposed development include:

01-1b Key Directions for the Entire City

- *Dynamically integrate transportation with land use.*
- *Create a safe, efficient and equitable transportation system for people, goods and services.*

- *Create a transportation system that supports active, accessible and healthy lifestyle options.*

01-1c Key Directions for Specific City Area's – Areas of Stability

- *Enhance the quality, diversity, completeness and sustainability of stable neighbourhoods and expand housing options for Winnipeg's changing population.*

01-1c Key Directions for Specific City Area's – Centres and Corridors

- *Focus a significant share of growth to Centres and Corridors in a manner that: • provides compact, mixed-use, high-quality urban development. • concentrates people and jobs in areas well-served by the primary transit service, located close to transit stops. • concentrates urban development in a built form that helps to optimize existing investment, municipal infrastructure, and facilities. • encourages a built form that supports a pedestrian friendly environment while incorporating climate sensitive site and building design.*

Section 01, Direction 3:

- *Promote Compact Urban Form and Manage the Extension of Municipal Services for New Growth.*

01-4 Housing Direction 1

- *Support diverse housing options in each neighbourhood or neighbourhood cluster throughout the city.*

Section 03-1, Direction 9

- *Collaborate with developers, community organizations and other partners to foster an age-friendly and accessible urban environment. With guidance from Complete Communities, encourage age-friendly and accessible new development in existing neighbourhoods.*

COMPLETE COMMUNITIES DIRECTION STRATEGY

Under the *Complete Communities Direction Strategy,* the proposed development falls within two policy areas. Given the depth of the property, the front portion of the site is considered within the Centres and Corridors Policy Area and the back portion of the site is considered within the Areas of Stability Policy Area for *Complete Communities.*

- With regard to this proposal, key policies guiding development of Centres and Corridors include the following general policies:
    - *Develop Centres and Corridors as focal points, characterized by a mix of uses, higher density developments, opportunities for gathering and other social interaction and a high-level of accessibility through multiple modes of transportation.*
    - *Provide a mix of employment, higher-density residential opportunities, retail and service uses that support the needs of and respect the context of adjacent communities.*
    - *Support a range of housing opportunities in terms of type, tenure, unit size.*
    - *Support active uses (such as retail and services) at street level and office and housing on the upper levels of multistorey developments.*

- *Encourage urban design and/or form-based strategies that help define the character of Centres and Corridors through clarifying the massing and height of buildings, setbacks, appropriate open space areas and appropriate parking design and locations.*
- *Encourage the tallest buildings and highest densities close to major transit stops and stations.*
- *Encourage the transition of development towards the outer edges of each Centre and Corridor that is sensitive to the scale, massing, height, form and character of the surrounding area.*
- *Encourage the development of recreation and community service facilities in these areas in a way that respects the desired form and character of the centre or corridor.*
- *Mitigate the potential impacts of new development on neighbouring streets, parks and properties.*
- *Promote high-quality plazas, parks and streetscapes as focal points and networks that are connected to the greater community.*
- *Focus improvements to the public realm, including pedestrian elements, such as street trees, street furniture, wide sidewalks and bicycle parking and public art.*
- *Support development that is sensitive to conserving historically significant features and resources.*
- *Encourage environmentally friendly design and construction*

- Specific policies for Community Mixed Use Corridors include the following:

  Community Mixed Use Corridors act as "main streets" for one or more neighbourhoods, providing a strong social function. They often have strong historical connections to their communities, have assumed significant transportation functions over time, are served by frequent and direct transit and typically support a mix of uses within a pedestrian-friendly environment. Some have become regional attractions because of unique services or character, while others serve a more local population base. Community Mixed Use Corridors provide opportunities for moderate levels of intensification of both population and employment over time. Intensification efforts could include an increased proportion of clustered, multiple storey buildings with retail and commercial services at grade level.

  - Community Mixed Use Corridors provide the opportunity to complete communities; areas of mixed use will largely be concentrated here. In order to accommodate the city's anticipated increases in residential, commercial and employment densities, Community Mixed Use Corridors will experience a fairly significant amount of change: existing corridors will be enhanced and new corridors will be built in New Communities as community hubs.
  - Promote the enhancement of existing Community Mixed Use Corridors through moderate intensification.

- For the portion of the lands that do not front onto Roblin Blvd, key policies guiding development of Recent Communities include:
  - *Encourage intensification to occur at centres and along corridors.*

- *Support low to moderate change in low-density neighbourhoods through development and redevelopment that is complimentary to the existing scale, character and built form.*
- *Promote the form of buildings and spaces that are sensitive to the community context and address the transition between new and existing developments.*
- *Support Complete Communities by ensuring diverse and high-quality housing stock.*
- *In order to meet the full life-cycle of housing needs within the community, promote a mix of housing type and tenure, such as duplexes, low rise apartments, secondary suites, semi-detached homes, townhouses.*

TRANSIT MASTER PLAN

- The Transit Master Plan identifies the interrelated nature of land use and transit use.
- The Transit Master Plan promotes multimodal connections with land use that better enable people to choose to live without a car or drive less. (p.26)

CLIMATE CHANGE ACTION PLAN

- Strategic Opportunity #3 *Advancing Sustainable Transportation – Increasing Mobility Options and Shift to Zero Emission Vehicles:*

  3.1 Increase Use and Efficiency of Public Transit Systems

  3.2 Increase the Density of Urban Development Along Key Transit Corridors.
- Strategic Opportunity #4 *Facilitate Compact, Complete Development and Increase Density:*

  4.1 Increase Strategic Infill Development that Provides Access to and Capitalizes on Existing and Planned Corridors with Frequent Transit Service

  4.3 Pursue Transit-Oriented Development

SUBDIVISION

- The proposal is to consolidate 2 lots into 1 lot creating a parcel that is 137,044 square feet (3.15 acres).
- **As previously discussed, considerations for road right-of-way widening and land dedication reduce the total developable size of the land down to** 107,071 square feet.

REZONING

- The site is currently zoned *"PR-2" Parks and Recreation - Community*
- The dimensional standards for development in the PR-2 zone are:
  - Minimum lot area – N/A
  - Minimum lot width – N/A

- Minimum front yard – 20 feet
- Minimum rear yard – 25 feet
- Minimum side yard – 10 feet
- Maximum height of buildings – N/A

- The proposed zoning district is *"RMF-M" Residential Multi Family - Medium*
- The dimensional standards for multi-family structures in the RMF-M zone are:
  - a minimum front yard of 25 feet;
  - a minimum rear yard of 25 feet;
  - a minimum interior side yard of 8 feet;
  - a minimum corner side yard of 20 feet; and,
  - a maximum building height of 60 feet.
- The minimum lot area in the RMF-M district is 9,000 square feet and the minimum lot area per dwelling unit is 800 square feet.
- The portion of the land being dedicated for parks purposes is being rezoned to the *"PR-1" Parks and Recreation – Neighbourhood*
- The dimensional standards for development in the PR-1 zone are as follows, however, no plans for buildings are proposed on the land:
  - Minimum lot area – N/A
  - Minimum lot width – N/A
  - Minimum front yard – 20 feet
  - Minimum rear yard – 25 feet
  - Minimum side yard – 8 feet
  - Maximum height of buildings – 30 feet

TRANSPORTATION ANALYSIS

- **The applicants hired a transportation consulting firm to conduct a Traffic Impact Study.**
- **Materials submitted by the applicant indicate that a traffic study concluded the following:**
  - *The development is anticipated to generate:*
    - *31 AM peak hour vehicle trips*
    - *32 PM peak hour vehicle trips*
    - *396 daily vehicle trips*
  - *The peak hour traffic operations analysis indicated that the existing intersection configuration at Roblin Boulevard at Princeton Boulevard and Roblin Boulevard at Alcrest Drive both provided acceptable performance operations in all scenarios.*

        - *A B-nose treatment to store one left-turning vehicle on eastbound Roblin Boulevard at Princeton Boulevard could be considered based on pre-existing conditions that are forecast to continue to post development conditions. B-Nose treatment is not a new condition created by the development as the eastbound left storage needs are equal to a single vehicle pre- and post-development. If desired by the City, the B-Nose could be introduced as part of future roadway on Roblin Boulevard.*
    - *Traffic volumes over the peak size hours of the day do not warrant implementation of traffic signal control at the intersection of Roblin Boulevard and Princeton Boulevard.*
    - *A sidewalk connection should be added between the southeast corner of the site and sidewalk on the north side of Roblin Boulevard. That would allow for more direct walking trips between the site and destinations to the east.*
    - *The development is not forecast to negatively impact any Winnipeg Transit stops in the study area.*
    - *The development is forecast to add approximately 320 vehicles per day (vpd) to the section of Princeton Boulevard between Roblin Boulevard and the site's private approach approximately 60 metres to the north. That would give a post-development volume of approximately 1120 vpd on that section. The study team considered that the volume is unlikely to negatively impact the community, since the adjacent land uses in that section are commercial and not residential.*
    - *The development is forecast to cause minimal impact on peak-hour queueing on southbound Princeton Boulevard at Roblin Boulevard. Residents living further north on Princeton Boulevard are not forecast to see significantly more trouble accessing Roblin Boulevard.*
    - *The development may cause some traffic increase (estimated at 80 vpd) on Alcrest Drive.*
- Based on these findings, the study team recommends:
    - *Proceeding with the development as proposed but adding an on-site connection between the southeast corner of the site and the sidewalk on the north side of Roblin Blvd.*

TRANSIT

- **The proposed development would be served by numerous Transit stops in close proximity to the subject site. The two closest transit stops along Roblin Blvd that serve east/west movement are located within less than 45 metres from the frontage of the subject site. Two additional stops are located at the William Clement Parkway with an approximate walking distance from the development of 250 metres to the stop for southbound travel and 215 metres to the stop for northbound travel (see Figure 3 below).**
- **At present, service to the site along Roblin is relatively frequent in the AM and PM peak periods. In total, 52 buses serve west bound movement to this site during weekdays.**
    - **12 buses via route 67 between 5:35 and 8:15**
    - **21 buses via route 79 between 8:35 and 3:45**

- **10 buses via route 67 between 4:08 and 6:30**
- **9 buses via route 79 between 6:45 and 10:45**

- **46 buses provide eastbound service along Roblin Blvd during weekdays:**
  - **11 buses via route 67 between 6:03 and 8:22**
  - **18 buses via route 79 between 8:42 and 3:08**
  - **6 buses via route 67 between 3:31 and 5:23**
  - **11 buses via route 79 between 5:44 and 10:41**
- **The stops at the William Clement Parkway currently provide a total of 10 buses each way throughout the day for the weekday schedule. The level of transit service is identified to increase along William Clement Parkway in the near future as part of the implementation of Transit's new master plan.**



Figure 3: Transit stops along Roblin Blvd and William Clement Parkway in close proximity to the subject site

- **The Transit Master Plan identifies the William Clement Parkway as part of the Rapid Transit Network 'Rose Line'.**
- The ROSE Line is intended to form the primary east-west connector providing a direct connection from Transcona in the east to Grace Hospital in the west, making use of the rapid transit infrastructure proposed for both the BLUE and ORANGE Lines through downtown (see Figure 4 below).
- Under the Winnipeg Transit Master Plan, Class 4 (Connector Route) service is planned on Roblin Blvd. Class 1 (Rapid Transit Rose Line) service is planned on the William Clement Parkway. This Rapid Transit service would be introduced initially as Class 2 (Frequent Transit Line C) by 2026. Existing conventional and express transit service as

well as proposed Feeder Route service are available on Roblin Boulevard, adjacent to the site, and will remain until that time.

- Walking and wheelchair access to this service for residents of the proposed development would also be via the site's southwestern corner, at the intersection of Roblin Boulevard and Alcrest Drive. The site plans provided illustrate a private sidewalk suitably located to enable fully accessible connectivity to transit service.
- The proposed frequent transit network and future rapid transit line along the William Clement Parkway aligns with the following Centres and Corridors policies of *Complete Communities*:
    - *Develop Centres and Corridors as focal points, characterized by a mix of uses, higher density developments, opportunities for gathering and other social interaction and a high-level of accessibility through multiple modes of transportation.*
    - *Encourage the tallest buildings and highest densities close to major transit stops and stations.*

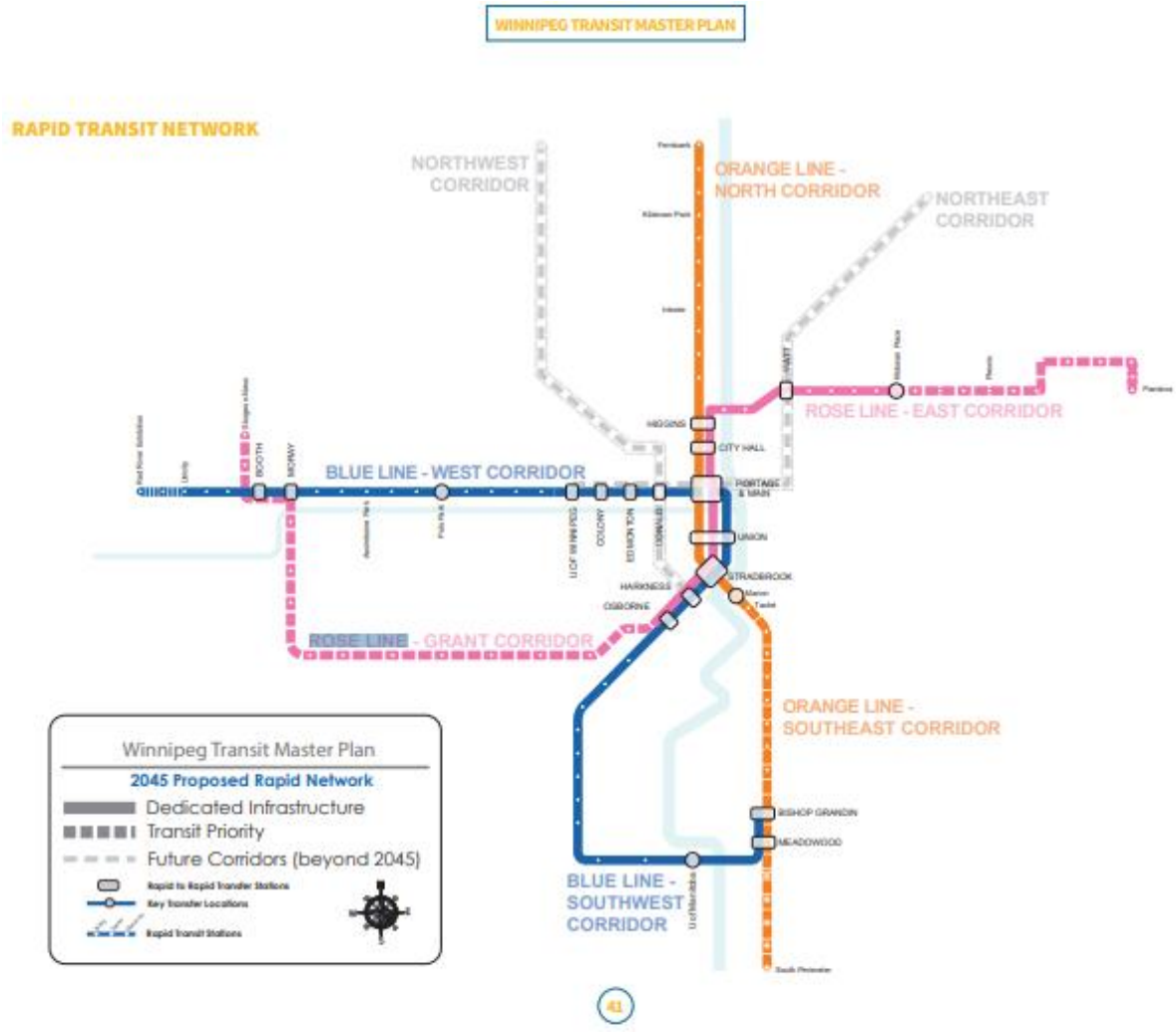

Figure 4: Planned Rapid Transit Network

PEDESTRIAN AND CYCLING NETWORK

In section 2B of the Pedestrian and Cycling Strategy the desire to increase and improve multi-modal connections is identified.

- *Improving pedestrian and bicycle access to transit increases multi-modal transportation choices and helps to extend the reach of public transit. To develop a comprehensive pedestrian and bicycle network, it is important to look for opportunities to integrate walking and cycling with other modes of transportation, particularly in regards to opportunities for better integration with transit (p.198)*
- The cycling network around the subject site is already established, with a separated cycling facility that runs along the William Clement Parkway. Vialoux is also identified as an informal on-street path that ties into multi use paths at the William Clement Parkway and into Assiniboine Park which is further east.
- Sidewalks currently exist on both the north and south sides of Roblin Blvd.
- Improvements to the pedestrian realm will be made along Alcrest with the inclusion of a sidewalk on one the east side of the road. The sidewalk is to extend from Roblin Blvd. to Vialoux Dr. as a requirement of the servicing agreement.

PUBLIC CONSULTATION

- The applicant provided the Urban Planning Division with a summary of the public consultation process that was undertaken with the area residents. A brief summary of this consultation provided by the applicant indicates the following (Please note that the development concept has changed as a result of the feedback received and described below):
    - One round of engagement took place that offered three sessions: one on May 18th 2021 at 7 pm, the second on May 20th at 7 pm and the third on May 22 at 3 pm.
    - Open house sessions through Zoom were held in place of in-person public meetings due to the pandemic.
    - Announcements of the Open House events was done via the delivery of flyers to nearby household and advertising in the local Canstar newspaper.
        - Flyers were delivered to 200 households in proximity to the subject site.
        - An advertisement was printed in the Metro local newspaper with a circulation of approximately 36,800
    - A total of 52 people registered for the Open House events.
    - Members of the public could submit questions via the website's RSVP form and throughout the presentation. 6 questions and comments were received from registrants prior to the engagement sessions. All questions were answered during the presentation's Question and Answer period.
    - May 18, 2021 at 7 pm: 25 registrants, 44 questions and comments received.
    - May 20, 2021 at 7 pm: 25 registrants, 33 questions and comments received

- May 22, 2021 at 3 pm: An abridge version of the presentation with two residents to answer questions directly.
- The webpage for the event was created on May 6, 2021. There were 300 unique visitors to the engagement page between May 6th and May 24th.

- Summary of issues raised

  Traffic – A common concern was the potential for further issues that only one access point to the proposed development at Princeton Blvd. would create. In addition, Alcrest Drive, Vialoux Drive and Princeton Boulevard are all currently unpaved roads and the increase in traffic would negatively impact road conditions. Response was that the existing private roadway was the most ideal access point to the site, which was recommended by the City through the pre-app process. It is anticipated that development should not significantly impact the traffic flow along Roblin. And the section of Princeton Blvd. from Roblin that accesses the site is also paved.

  Green Space – another common concern expressed during the open house sessions was with regard to the loss of trees, community space and the play structure. The project team expressed that the site has been sold for the purpose of redevelopment and will no longer be a public space. The developers had explored all options to save as many trees as possible, but due to the right-of way expansion of Alcrest Drive and the lot grading requirements to ensure proper site drainage, existing trees would have to be removed. The trees that are removed will be replaced with significantly more new trees.

  Parking – Some surrounding residents expressed concern of visitors for this development, parking on Alcrest Drive, Vialoux Drive and Princeton Boulevard and an overnight parking ban would be ideal to mitigate parking on these streets. The project team expressed that they cannot control visitor's parking habits, the proposed development will have designated visitor parking on site and the buildings will be oriented inward making parking on-site more ideal for visitors.

  Building Height – There were comments made that having the taller building along Roblin was appreciated, but concerns were expressed regarding the 2-storey townhouse building height in proximity to the adjacent single-family dwellings on Princeton Blvd. The project team explained that the closest townhouse building will be between 15-25 feet from the rear property lines with patios facing the interior of the site. Allowable height based on the Zoning By-law would be a maximum of 35 feet (3 storeys), and the reduction to 2 storey townhouses would help mitigate any height impacts. Part of the development plan is to also include landscaping and a six-and-a-half-foot fence between the site and the Princeton Boulevard homes to ensure privacy.

  Operations – There were a variety of questions regarding the tenure, types of tenants expected to occupy the building, and other features of the site (e.g. 55-plus, accessibility, community and recreational space, etc.) The project team reviewed each of these to the satisfaction of the attendees to clarify the intent and target market for this development.

  Construction - Several questions were asked about the construction timeline, construction vehicles accessing the site, and how construction might affect the foundations of nearby houses. The project team provided detailed responses of how the site would be accessed for construction vehicles, earliest anticipated start, timeline, and of the potential impact to foundations due to pile driving, and how it will

be mitigated. This includes a direct line of communication with the developer in case of an incident of emergency.

Drainage – There were several questions regarding the drainage of how the surface run-off would impact the surrounding properties, and for the older infrastructure. The project team assured the attendees that all drainage will be dealt with on site and connected to the Roblin Boulevard infrastructure.

- Site and building design modifications made in response to the feedback received in the Public Open House sessions include:

    - Building height – The townhouses were originally proposed at 2 storeys. They have now been brought down to 1 storey and have a building height of 20 feet to the mid line of the pitched roof.
    - Density – a reduction of the density from 110 units to 80 units
    - Traffic – preparation of a Technical Traffic Memo that confirmed proposed traffic volumes do not exceed Local Road Standard Volumes and intersections are not adversely impacted.
    - Preservation of mature trees and dedication of land to the City for park space.

COMPATIBILITY WITH THE SURROUNDING AREA

- The proposed development is to be located on a former school site. The immediately surrounding land uses include commercial uses along Roblin Boulevard and single-family residential uses to the west, north and east.
- The existing school building on site is approximately 19,600 sq. ft. The back portion of the site is primarily open field, with a playground and several mature trees located near the north portion of the property.

Density

- The proposed number of units on site is 80. The permitted density for the RMF-M district allows for a lot area per dwelling unit of 800 sq. ft. To calculate lot area per dwelling unit and determine the total number of units permitted on site, you take the total lot size and divide it by 800. In this case, 137,044 sq. ft. divided by 800 equals 171 units permitted under the RMF-M zoning district.
- Based on the proposed number of units of 80, the lot area per dwelling unit being proposed is calculated at 1,713 square feet.
- The proposed density falls well below the permitted density under the RMF-M zoning district. For reference, the RMF-S zoning district prescribes a lot area per dwelling unit of 1,250 square feet. Accordingly, the proposed development also falls well below the permitted density of the RMF-S “Residential Multi Family – Small zoning district.
- Subsequently, as a result of land being taken for the road widening and for land dedication, the total lot size to remain is to be 107,971 square feet. Using this metric to calculate density the resulting permitted number of units would be 134. The proposed 80 units results in a lot area per dwelling unit of 1,349 sq. ft, which would still be in line with the RMF-S zoning district.

- Other multi-unit residential buildings are established within the neighbourhood in close proximity. Some of these buildings include:
    - 225 Princeton Ave. – 30 units, on a lot size of approximately 40,000 square feet results in a lot area per dwelling unit of 1,333 square feet. Building height is approximately 35 feet tall.
    - 3500 Roblin Blvd. – 58 units on a lot size of 62,650 sq. ft. resulting in a lot area per dwelling unit of 1,080 square feet. Building height is approximately 32 feet tall.
    - 170 Hendon – 151 units on a lot size of 50,350 sq ft. resulting in a lot area per dwelling unit of 333 square feet. Building height is approximately 80 feet tall.
    - 150 Hendon – 59 units on a lot size of 64,095 sq ft. resulting in a lot area per dwelling unit of 1,086 square feet. Building height is approximately 30 feet.
    - 3416 Vialoux – 30 units on a lot size of 38,479 sq ft. resulting in a lot area per dwelling unit of 1,282 square feet. Building height is approximately 36 feet tall.
    - 3420 Vialoux – 32 units on a lot size of 40,306 sq. ft. for a lot area per dwelling unit of 1,259 square feet. Building height is approximately 23 feet tall.
- Looking at established multi-unit residential buildings in close proximity to the subject site confirms that the proposed density under the current lot size of 137,044 square feet is the lowest at 1,713 square feet (please note, the higher the lot area per dwelling unit, the lower the density). Under the reduced lot area after road right-of-way widths and park dedication are taken away, the lot area per dwelling unit at 1,379 square feet remains the lowest density site in comparison to the established multi-unit residential buildings in the near vicinity.

Setbacks/Height

- Submitted plans show that the six storey building is to be setback 14 feet from the newly established west property line, instead of the 20 feet required per the Zoning By-law. As such, a variance is being requested.
- The reduced setback is a result of the City request that a 26-foot-wide portion of land be taken to allow adequate road right-of-way width on Alcrest Drive, including a sidewalk. Without the taking, the proposed setback would be 40 feet from the current property line, which would satisfy the Zoning By-law requirement of 20 feet.
- The distance of the proposed building to the single-family dwelling property lines on the west side of Alcrest Drive is approximately 75 feet. The proposed building height is 60 feet. This setback satisfies the 45-degree angular plane measurement, which is a common tool used to determine an appropriate scale in terms of setbacks and height in relation to adjacent residential properties. Given that there is a road right-of-way between the two properties, the calculation is made to the east property line of the single-family dwellings on Alcrest Dr. See figure 5 below for a demonstration of the 45-degree angular plane.
- The east side of the building is to be setback 10 feet from the new property line. The portion of the building located in this space is adjacent to a two storey commercial building. With respect to policy associated with Centres and Corridors, the intent is to integrate higher density development in a manner that supports neighbourhood commercial. The 45-degree angular plane is not typically considered in relation to commercial properties. As such, the setback proposed between the commercial and

multi-unit residential is deemed acceptable and contributes to a more urban oriented corridor with finer grain building setbacks that front onto the corridor.

- The proposed setbacks of the single storey attached condos in the rear portion of the site are 8 feet to the east property line and 8 feet 6 inches from the west property line.
- Site plans indicate that landscaping is intended to be introduced along the east property line between the fences of existing single-family dwelling properties and the proposed units. With respect to this setback the 8 feet leaves little room between the rear yards of the single-family dwellings. While the 8 feet satisfies the Zoning By-law requirements and landscaping is proposed within this space, the setback was flagged as a possible concern that may be raised by abutting neighbours. Should concerns be raised, modifications could be explored to establish a greater setback to the east property line.
- The bungalow condos proposed on the west side of the site are set back 8 and a half feet from the west property line and are setback a total of 68 feet from the east property line of dwellings located on the west side of Alcrest Dr.
- The units along Alcrest Dr. integrate well with the street and form a reasonable transition between the detached single-family dwellings on the other side of the street. The design of the units provides a level of visual interest and variety in terms of articulation, roof pitches and materials. The units include front porches, which helps create a good relation to the street front. Landscaping, as well as boulevard trees will help provide a visual buffer to the units over time as the trees mature.

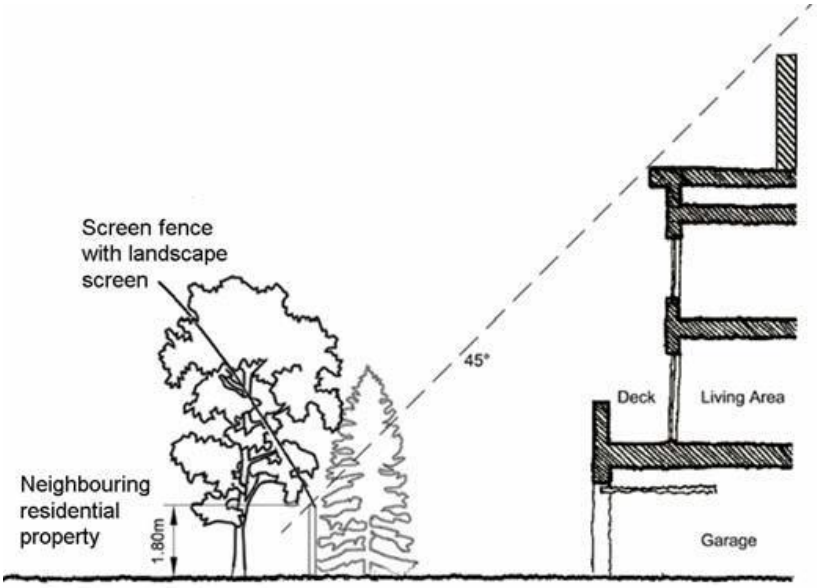

Figure 5: example image of how a building meets the criteria of being contained below the 45-degree angular plane.

Parking

- The Zoning By-law prescribes 1.5 parking stalls per unit for multi-unit residential development. A total of 80 units are proposed, meaning that 120 stalls are required. The applicant is providing 120 stalls. 82 stalls are located within the south portion of the site that fronts onto Roblin Blvd. Of these 82 stalls, 42 stalls are located within the building on the main floor and 40 stalls are outdoors (17 of which are to be covered).

- For the bungalow condos, 12 parking stalls are located at the northern portion of the site. 28 parking stalls are provided within garages associated with the bungalow condos.
- The Zoning By-law also requires that with multi-unit residential development, 10% of the required parking is allocated for visitor parking. The requirement would be for 8 spaces and the proposal is to include 11 visitor stalls. Submitted plans indicate that 17-foot-deep driveways are to be provided for the bungalow condos on the east side of the site. While these driveways do not technically count toward the visitor parking stall counts due to the tandem nature of the parking, it is understood to be common practice for those visiting homes with driveways, that parking is an available option at the discretion of the owner.
- 5 barrier free parking stalls including 2 van accessible stalls are provided.
- 10 bicycle parking stalls are proposed in the current concept plans. However, in conversations with the proponents, they note that bicycle parking will also be available to those living in the bungalow condo units within their garage and that as final design details are fleshed out that additional considerations for secure indoor parking will be made. They note that at present each floor has allocated space for storage and this space may be amalgamated to allow for uses such as bike parking and other amenities such as gym use, reading and games rooms, etc.

Age-Friendly

- *OurWinnipeg* encourages age-friendly and accessible new development in existing neighbourhoods.
- The development is identified as being targeted toward a 55 plus residential community and the applicant indicates the following building and on-site features will be included to accommodate various needs.
- A common room & patio is planned to be incorporated into the 6 storey building including a 430 square foot room with kitchenette located above the foyer with a 180 square foot common area deck located over the canopy. This room is intended for communal activities and rental by the residents.
- Floors 2 through 6 are to have a minimum 200 square feet of space per level that will be used for building amenities which will include a gym, a wellness centre (yoga, etc..) and additional areas for reading. games, etc. This area is currently shown as storage on each level, however once locker areas are deducted, there will still be a residual of 200 sq. ft. per floor. These areas may end up being combined, however regardless of what floor the rooms are on, there will be a minimum of 1,000 square feet of combined amenities in the overall building in addition to the Common Room & Patio outlined above.
- With respect to accessibility features the proponent indicates that the building is designed as condominium units for purchase that will include options to include accessibility features within the suites themselves.
- 2 van accessible parking spots with adjacent loading zones for wheelchairs have also been identified in initial site plans.

Arborist Report

- An arborist report for mature trees located on site was conducted on July 7th, 2021 by a certified arborist. It should be noted that the recommendations and conclusions about preservation were based off of a previous iteration of the site design, which has now been revised in a manner that removes development up to the north property line and identifies an 11,000 square foot area that will provide room to preserve a number of trees.
- 15 trees were identified as Bur Oak along within the northeast portion of the site
- 5 trees located north of the existing fence were identified to be in a range of conditions from poor, fair and good.
- 8 trees identified within the north portion of the site, south of the fence, were primarily identified as being in poor and fair condition.
- 10 trees located along the west side of the property identified to be in the range of conditions from poor, fair and good.
- The arborist recommends that tree protection zones should be established for all trees to be retained on site, they should be as large as possible, but must at minimum encompass the critical root zone as determined by the diameter of the tree.
- Physical barriers should be erected to exclude all materials and equipment from the critical root zone and all efforts should be made to avoid compaction and root disturbance outside this zone in order to give the trees the best chance for a positive outcome.
- Through conversations with City or Winnipeg's Urban Forestry Branch, they indicate that during the construction process, especially for trees on land to be dedicated for a park, the Urban Forestry will have a presence prior, during, and after the planned work. Any deviation from the tree protection specifications require approval and if any trees are damaged the Developer is held accountable and subject to provide the appraised value of the tree as determined by the Urban Forestry Branch.

Landscaping

- The breakdown of landscaping requirements versus what is being proposed is as follows:
    - For street edge landscaping on Roblin Blvd. (based on 176 feet of frontage), 6 trees and 27 shrubs are required. The proposal is for 6 trees and 31 shrubs. There are also 8 mature trees identified along Roblin Blvd. where the applicant indicates that best efforts will be made to preserve them.
    - The street edge landscaping for Alcrest Drive (based on 669 feet) results in a required 10 trees and 90 shrubs. The proposal is for 20 trees and 95 shrubs. The applicant also indicates that the mature trees located along Alcrest have been identified and best efforts will be made to preserve them.
    - Building foundation landscaping required along the façade of the building facing Roblin Blvd. The width of the building face is 115 feet and as such 12 shrubs are required. The applicant is proposing 20 shrubs.
    - Building foundation landscaping along the units fronting Alcrest Dr. requires 71 shrubs. The applicant is proposing to provide the 71 shrubs.
    - Parking lot interior landscaping is required for 13,626 square feet of parking area x 5% = 681 square feet. One tree must be provided for each 300 square feet of

parking lot interior landscape area and one shrub must be installed for each 100 square feet of parking lot interior landscape area. As such, 3 trees and 7 shrubs are required. 4 trees and 7 shrubs are proposed.

- Additional planting that is not required under the Zoning By-law is also proposed. 42 trees and 77 shrubs are identified in addition to the prescribed landscaping. This does not include the approximately 11,000 square feet of land that is being dedicated for park reserve and the trees that are currently located within this space.

- Further, an approximate 11,000 square foot area, located at the north portion of the site is being dedicated to the City as park land, which contains several mature oak trees. With the commitment to preserve existing and healthy mature trees, the site maintains a high-quality natural screen that buffers the established uses from the proposed development. Additional coniferous trees are proposed along the property edges to further enhance this visual buffer.
- In addition to the landscaping proposed on site, a condition of the development agreement indicates that sod and trees will be required to be planted in boulevards abutting the Planned Area in accordance with City specifications and guidelines to the satisfaction of the Director of Public Works. This means additional trees will be planted along Alcrest Dr. that will help buffer the proposed development to/from existing dwellings.

Shadow study

- The City of Winnipeg guideline for shadow studies indicates that the intent is to ensure that a minimum of 5 hours of uninterrupted sunlight are provided on surrounding properties. That studies should typically show shadow impacts at the spring and fall solstice (March 21st and September 21st), but that additional dates may be requested based on the context.

- Upon review of the shadow impact study, the Urban Planning Division confirms that for March 21st the shadow impacts are contained predominantly within the subject site and provide for the 5 hours of uninterrupted sunlight between 9 am and 6 pm. At 9 am the shadows from the six storey building fall upon the front yards of 4 properties on Alcrest Drive. The noon hour shadows are contained on the site. 3 pm shadows are cast on the rear portion of the commercial property to the east and 6 pm shadows are cast from the bungalow condos along the east portion of the site onto the rear yards of the single-family dwellings on Princeton Blvd.

- For September, similarly, the shadow impacts are predominantly contained within the subject site and allow for 5 hours of uninterrupted sunlight on adjacent properties.

CONDITIONS OF APPROVAL

Zoning Agreement

- The Winnipeg Public Service recommends that the developer enter into a Zoning Agreement with the City of Winnipeg for plan approval by the Director of Planning, Property and Development and the Assiniboia Community Committee, prior to the issuance of building permits.

- The intent of this Plan Approval is to review the final plans with respect to site and building design before building permits are issued. Particular elements of the proposal that will be reviewed at Plan Approval include, but are not limited to:
    - Landscaping throughout the subject site
    - Building design, elevations, materials, architectural details
    - Private approaches
    - Traffic circulation within the subject site
    - Parking, bicycle parking
    - Garbage bin location and access
- The Public Service is also recommending a condition that limits the heights of buildings located north of the Approach at Princeton Ave. to have a maximum height of 20 feet, as measured to the mid-point of a sloped roof or to the top of a flat roof. These lower heights are in accordance with the plans submitted by the applicant and ensure development within the back portion of the site maintains a reasonable transition to single family dwellings in close proximity to the site.
- Taller heights may be acceptable for buildings located at the west edge of the site, but the shorter buildings, given the proximity to the shared property line with single family properties, seems appropriate.

Servicing Agreement

- The Winnipeg Public Service recommends that the developer enter into a Servicing Agreement with the City of Winnipeg, in order to address a number of items relating to municipal services, infrastructure, and park dedication. These items are discussed in the Report of the Administrative Coordinating Group (ACG), which is attached to this report as Schedule “B.”

Land Dedication

- As a condition of rezoning or subdivision of a parcel of land, a developer is required to contribute a portion of the land to be developed to the City of Winnipeg for parks purposes. The amount of land is not less than 8 percent.
- In the case of the subject proposed subdivision and rezoning, the administration is recommending that the developer provide park land located at the north portion of the site. The total area is to be just under 11,000 sq. ft. and the area will maintain several mature trees.
- See Report of the Administrative Coordinating Group (ACG) for more information.

RECOMMENDATION

The Urban Planning Division recommends **approval** for the following reasons:

- The proposed development aligns with policies that guide development in *OurWinnipeg, the Complete Communities Direction Strategy, the Climate Action Plan, Pedestrian and Cycling Strategy and Transit Master Plan,* in that it provides a variety of housing options with the apartment style building and bungalow condos, options for people to age in place, close access to Active Transportation and close access to high frequency transit, which provide options for a variety of modes of transportation beyond driving.

- The subdivision and rezoning, subject to the recommended conditions, is compatible with the surrounding area, as the taller building fronts onto a Community Mixed Use Corridor where moderate increases in density are encouraged under the Complete Communities Direction Strategy. The back portion of the lands are developed as bungalow condominiums and generally reflect the low-density residential character of the neighbouring properties.
- The design of the buildings in terms of setback and height, presents a reasonable transition to the surrounding commercial and residential uses. Considerations for some design alternatives may be required to help mitigate some potential concerns by neighbouring residents. One such item may be the proximity of the bungalow condos to the east property line
- The dedication of land at the north, preserves an approximate 11,000 square foot area where several mature trees currently exist on the site, which is desirable from a naturalization perspective and aesthetics perspective as it maintains a high-quality transition from the subject site to neighbouring properties.

This Report Submitted by:
Planning, Property and Development Department
Urban Planning Division

Report Prepared by: D. Clark, RPP, MCIP
PPD File #: DASZ 1/2022

Schedule "A" for File DASZ 1/2022, Assiniboia Community Committee, dated April 15, 2022

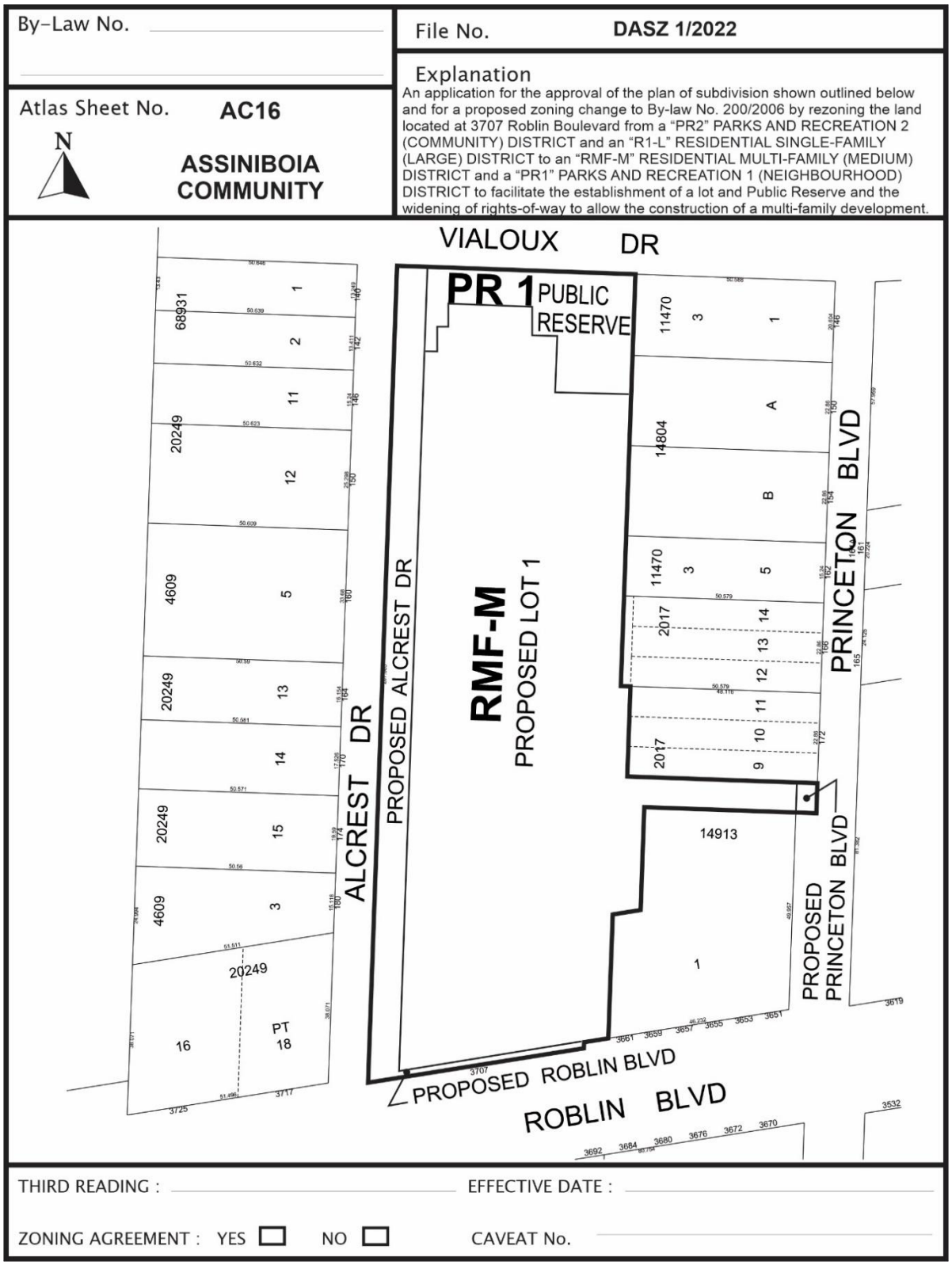

SCHEDULE B

REPORT OF THE ADMINISTRATIVE COORDINATING GROUP

RE: PROPOSED SUBDIVISION AND REZONING OF LAND LOCATED AT 3707 ROBLIN BOULEVARD

It is recommended that approval of DASZ 1/2022, if granted, be subject to the applicant entering into a Servicing Agreement containing the following conditions:

Section I – Plan Considerations

1) The Developer shall, at no expense to the City, legally open property required to widen the Roblin Boulevard right-of-way by 1.524m to the north, along the full length of the Planned Area abutting Roblin Boulevard, to the satisfaction of the Director of Public Works.

2) The Developer shall, at no expense to the City, legally open property required to widen Alcrest Drive right-of-way by 7.942m to the east, along the full length of the Planned Area, abutting Alcrest Drive, to the satisfaction of the Director of Public Works.

3) The Developer shall, at no expense to the City, legally open property required to widen Princeton Boulevard right-of-way by 5.182m to the west, along the full length of the Planned Area, abutting Princeton Boulevard, to the satisfaction of the Director of Public Works.

Section II – Engineering Studies

1) The Developer shall, at no expense to the City, conduct geotechnical investigations in accordance with the City's "Guidelines for Site Investigation Requirements for Public Works Street Projects" and develop pavement designs, all to the satisfaction of the Director of Public Works.

2) The Water and Waste Department has advised that there is adequate wastewater servicing for the provided plans of development. Additional review will be required by their Department should the plans of development change during the design process. Wastewater servicing for the Planned Area must be connected/directed to the wastewater sewer in Roblin Boulevard.

3) The Water and Waste Department's analysis indicates that there is not adequate fire flow for the proposed development. The applicant is required to either propose building construction upgrades to demonstrate compliance with fire flow requirements (described at http://winnipeg.ca/waterandwaste/dept/waterdemand.stm) at the building permit stage; or reduce the proposed density and adjust their proposed site plan to match existing service levels.

Section III - Servicing Conditions

1) Land Drainage Sewers

The Developer shall pay to the City, in cash, prior to release of subdivision mylars for registration in the Winnipeg Land Titles Office, their share of the cost of the regional land drainage system, as determined by and to the satisfaction of the Director of Water and Waste.

2) Charleswood Transportation Levy

The Developer shall pay to the City, in cash, prior to the release of mylars for registration in the Winnipeg Land Titles Office, their share of the Charleswood Transportation Levy for proposed Lot 1, as determined by and to the satisfaction of the Director of Public Works.

3) Alcrest Drive

The City shall, in accordance with the Land Value section of the Development Agreement Parameters, reimburse the Developer for a portion of the property abutting Alcrest Drive required to widen the Alcrest Drive right-of-way to existing standards, conceptually noted as the lands along the existing fence line to the eastern limit of the existing Alcrest Drive right-of-way (approx. 9,000 ft^2), as determined by to the satisfaction of the Director of Public Works.

4) Roblin Boulevard

The Developer shall, at no expense to the City, modify the median within Roblin Boulevard at Princeton Boulevard to accommodate left turning vehicles to and from Princeton Boulevard, and all related works, as determined by and to the satisfaction of the Director of Public Works.

5) Princeton Boulevard

The Developer shall, at no expense to the City, construct Princeton Boulevard between the existing terminus of Portland cement concrete pavement and the north radius of the approach serving 172 Princeton Boulevard, abutting Princeton Boulevard, as Portland cement concrete pavement, 7.5m wide by 150mm thick, and all related works, including but not limited to an appropriate asphalt transition, reconstruct and widen where necessary associated approaches and all related works, boulevard landscaping and land drainage facilities, if required, all as determined by and to the satisfaction of the Director of Public Works.

6) Sidewalks

a) The Developer shall, at no expense to the City, construct 1.5m wide by 100mm thick Portland cement concrete sidewalks and all related works, on the standard alignment, 0.3m from the property line or at an alignment as approved by the Public Works Department, on the east side of Alcrest Drive between Roblin Boulevard and Vialoux Drive, including but not limited to regrading of east boulevard and/or ditch, all as determined by and to the satisfaction of the Director of Public Works.

b) The Developer shall, at no expense to the City, construct 1.5m and/or 1.8m wide by 100mm thick Portland cement concrete sidewalks, on the standard alignment, 0.3m from the property line or at an alignment as approved by the Public Works Department, and all related works including but not limited to curb replacement on the west side of Princeton Boulevard between Roblin Boulevard and the private approach serving the Planned Area, if feasible, as determined by and to the satisfaction of the Director of Public Works.

c) If a curb adjacent sidewalk is required on Princeton Boulevard and should the existing curb not be in a condition suitable to accommodate the sidewalk, the Developer shall, at no expense to the City, reconstruct the curb on the west side of Princeton Boulevard, all as determined by and to the satisfaction of the Director of Public Works.

7) Boulevards

a) The Developer shall, at no expense to the City, sod, and plant trees on all boulevards within and fronting on the Planned Area, all in accordance with City specifications and guidelines and, where required, with concept plans prepared by the Developer and submitted to, and approved by, the Director of Public Works.

b) The Developer shall, at no expense to the City, maintain the sod for a period of one year and the trees for a period of two years, in accordance with specifications approved by the Director of Public Works.

8) Construction Traffic

a) The Developer shall ensure that construction traffic uses access routes as determined by the Director of Public Works.

b) The Developer shall maintain, at no expense to the City, the access routes in a clean, dust free and safe condition, free of dropped and tracked-on mud, and shall undertake regular scraping and sweeping of streets until building construction, including landscaping is complete, all as determined by and to the satisfaction of the Director of Public Works.

9) Utilities

a) The Developer shall, at no expense to the City, cause underground electrical and telephone services to be installed to serve the Planned Area and will pay the full cost to convert any existing overhead services within the Planned Area to underground to the satisfaction of the Director of Public Works.

b) The Developer shall pay all costs associated with the relocation of street lights and other utilities made necessary as a result of, or required to accommodate, the works to be constructed by the Developer to serve the Planned Area, as determined by and to the satisfaction of the Director of Public Works.

10) Litter and Refuse Control and Clean-Up

a) The Developer shall, at no expense to the City, and of its own volition, initiate and control the regular cleanup of litter and refuse from the contractors and builders for this development, both on-site and off-site, during the installation of services and construction of buildings, until substantial completion of all construction, as determined by and to the satisfaction of the Director of Public Works.

b) The cleanup of litter and refuse shall be done on a regular basis as determined by the Director of Public Works. This shall include initiating action and assuming any costs in remedying the situation to the satisfaction of the Director of Public Works.

11) Survey Monuments

a) Subsequent to completion of the Planned Area, as determined by the Director of Planning, Property and Development, the Developer shall pay the full costs of having all survey monuments within the Planned Area verified and/or restored by a Manitoba Land Surveyor and shall prepare a Plan of Survey Perpetuating Certain Monuments, confirming the position of all the survey monumentation within the Planned Area, for filing in The Winnipeg Land Titles Office.

b) In certain circumstances where all the survey monuments within the Planned Area have been found or restored to their original positions, upon approval by the Director of Planning, Property and Development, the requirements for Plan of Survey Perpetuating Certain Monuments may be waived.

12) Public Reserve

a) The Developer shall dedicate as Public Reserve at least 8% of the land contained within the overall development area and shall, at no expense to the City, undertake landscape improvements and pay its share of the cost of services in streets abutting the dedicated land all in accordance with plans and specifications approved by the Director of Public Works and the Director of Planning, Property and Development.

b) If the Developer is unable to dedicate a full 8% of the land, the Developer shall compensate the City for any shortfalls in the amount of land, servicing and improvements not provided, at the then current values, by payment of cash, or, by the provision of an equivalent value of additional amenities, as approved by the Directors of Public Works and Planning Property and Development.

c) Landscape improvements of the Public Reserve lands shall be done in accordance with plans and specifications provided by the Developer and approved, prior to the commencement of construction, by the Director of Public Works.

i) The scope of landscaping shall include the removal the existing chain link fencing on the north, west and east limits of all PR lands and as well as some nominal grading, sodding, and land drainage of the Public Reserve lands,

d) The Developer shall, at no cost to the City, supply and install uniform continuous fencing for the property within the Planned Area abutting the Public Reserve lands, as determined by and to the satisfaction of the Director of Public Works and the Director of Planning, Property and Development.

i) The fencing shall be located entirely on private property and shall be the responsibility thereafter of the private property owner to retain, repair and maintain.

ii) The Developer shall permit the City to file a caveat against the title(s) of the lot abutting the Public Reserve requiring the future property owner(s) to maintain and/or replace the fence as originally constructed, to the satisfaction of the Director of Public Works.

e) The Developer shall take all precautions and measures necessary to ensure existing trees within the Public Reserve are not damaged or removed during development of the Planned Area, unless approved by the City Forester.

f) The Developer shall adhere to the most recent version of the City's *Tree Planting Details and Specifications*, specifically "Tree Protection during Construction", a copy of which should be obtained by the Developer prior to construction.

i) In the event that damage does occur, the Developer shall provide equitable compensation to the City as determined by and to the satisfaction of the City Forester

g) The Developer shall prepare a Tree Protection Plan, and shall establish tree protection measures in accordance with the following requirements:

i) the Plan shall be developed by an arborist with ISA arborist certification, which is validated with an ISA certified arborist number.

ii) the Plan shall include an updated assessment of tree conditions, with a clear tree protection and preservation plan for both the "to be preserved" and "best efforts to be preserved" trees contained within the Public Reserve, as determined through tree appraisal by the ISA certified arborist, and in consultation with the City's Urban Forestry Branch.

iii) Urban Forestry must approve the Plan and will conduct, prior to issuance of building permits, inspections at the site to ensure tree protection is implemented as planned and maintained.

iv) tree protection shall be installed prior to any work being done, shall be maintained at all times during construction and shall be intact until completion of the project.

v) if landscaping works requires modifications to the tree protection measures, the requirements shall be indicated in the Plan.

vi) the Developer is required to engage an ISA certified arborist to direct and monitor the tree protection measures throughout the course of the development.

vii) The Plan shall be in accordance with the City's DRAFT tree protection specifications.

h) The Developer shall assume responsibility for all Public Reserve sites until they are developed, and throughout the maintenance period until Final Acceptance Certificate for Parks has been issued by the Director of Public Works.

i) The Developer shall, at no expense to the City, maintain the public open space improvements for a period of two years, in accordance with specifications approved by the Director of Public Works. Commencement of the maintenance period will correspond with the issuance of Construction Completion for Parks and shall be deemed concluded by the issuance of a Final Acceptance Certificate for Parks. The City reserves the right to impose longer maintenance terms for amenities and features, such as naturalized areas, that the Director of Public Works deems to be beyond the standard scope of development.

j) Public Reserve development should be undertaken by the time the build out has reached 80% and completed before reaching 100%, unless an extension of time has been previously approved, in writing, by the Director of Public Works.

k) Securities for Public Reserve improvements may be reduced following the issuance of a Construction Completion Certificate and site inspection and approval by the City, but shall not be released in full until as-built drawings have been received and accepted as complete by the Director of Public Works and *Final Acceptance for Parks* has been issued.

Section IV – Costs and Fees

1) By-laws and Approvals

The Developer shall pay all of its and the City's costs, fees, and expenses associated with the preparation and attainment of approval for registration of the Zoning By-law(s) and plan(s) of subdivision, including all Municipal Board, Land Titles Office and other fees and expenses, all survey, engineering and advertising fees and costs, and all expenses incidental to the preparation of this Agreement and the physical development of the Planned Area.

2) Professional Fees

a) The Developer shall pay the full cost of all design services, including preliminary engineering studies, servicing reports, servicing criteria, construction drawings and specifications, and grading and landscaping plans and specifications, to be provided by Consulting Engineer(s) approved by the City, for the design of the municipal services, parklands, parkways and associated works required to serve the Planned Area;

b) The Developer shall pay the full cost of construction and landscaping supervision services provided by or on behalf of the City for field inspection, preparation of progress estimates, provision of as-built drawings by March 31 of the year following substantial performance of the work, and all other engineering consulting services related to the installation and acceptance of municipal services, and all associated works to serve the Planned Area.

3) Administration Fees

The Developer shall pay to the City, prior to the release of the subdivision mylars for registration in the Land Titles Office, an administration fee plus applicable GST to help defray the City's administration and related costs associated with the preparation and implementation of the Development Agreement.

THIS REPORT SUBMITTED BY:

Administrative Co-ordinating Group
File No. DASZ 1/2022
April 12, 2022

"*Original Signed by D. Trenchard"*
D. Trenchard, P. Eng.
Land Development Branch
Planning, Property and Development Department

"*Original Signed by M. Gajda"*
M. Gajda, P. Eng.
Engineering Division
Water and Waste Department

"*Original Signed by S. Whitehouse"*
S. Whitehouse, M.L. Arch.
Urban Planning and Design Division
Planning, Property and Development Department

"*Original Signed by C. Desjardine"*
C. Desjardine, M. Sc., P. Eng.
Transportation Division
Public Works Department

Exhibit “10” referred to in File DASZ 1/2022



View down internal street



View along Alcrest St.

Articulated Design Union 673 Mulvey Ave Winnipeg, MB. R3M 1G2 email: info@designunion.ca	Project Address: 3707 Roblin Blvd. Rendered	**PRINCETON ESTATES 55** *A Mature Community in the Heart of Charleswood*	**Drawn by:** DM **Date:** Jan 12 2022 **Scale:** **Page Number:** A100.1	2022-01-12 4:04:04 PM



Multifamily building, view entering off Princeton



Multifamily building, cornor view from Roblin blvd. and Alcrest st.

Articulated Design Union 673 Mulvey Ave Winnipeg, MB. R3M 1G2 email: info@designunion.ca	Project Address: 3707 Roblin Blvd. Rendered	**PRINCETON ESTATES 55** *A Mature Community in the Heart of Charleswood*	**Drawn by:**	DM
			Date:	Jan 12 2022
			Scale:	
			Page Number:	A101.1

2022-01-12 4:04:05 PM



Bungalow front Elevation



Bungalow Rear Elevation

Articulated Design Union 673 Mulvey Ave Winnipeg, MB. R3M 1G2 email: info@designunion.ca	Project Address: 3707 Roblin Blvd. Renders	**PRINCETON ESTATES 55** *A Mature Community in the Heart of Charleswood*	**Drawn by:**	DM
			Date:	Jan 12 2022
			Scale:	
			Page Number:	A102.1

2022-01-12 4:04:05 PM



Articulated Design Union 673 Mulvey Ave Winnipeg, MB. R3M 1G2 email: info@designunion.ca	Project Address: 3707 Roblin Blvd. Landscape & Site Plan	**PRINCETON ESTATES 55** *A Mature Community in the Heart of Charleswood*	Drawn by: DM Date: Jan 12 2022 Scale: 1" = 50'-0" Page Number: A103

2022-01-12 4:04:06 PM



Sun Shadows @ 10 AM on 9/21/2021
Refer to Sun Study Package for expanded dates

Property Lines

Articulated Design Union 673 Mulvey Ave Winnipeg, MB. R3M 1G2 email: info@designunion.ca	Project Address: 3707 Roblin Blvd. Google maps overlay	**PRINCETON ESTATES 55** *A Mature Community in the Heart of Charleswood*	**Drawn by:**	DM
			Date:	Jan 12 2022
			Scale:	1" = 50'-0"
			Page Number:	A104

2022-01-12 4:04:16 PM

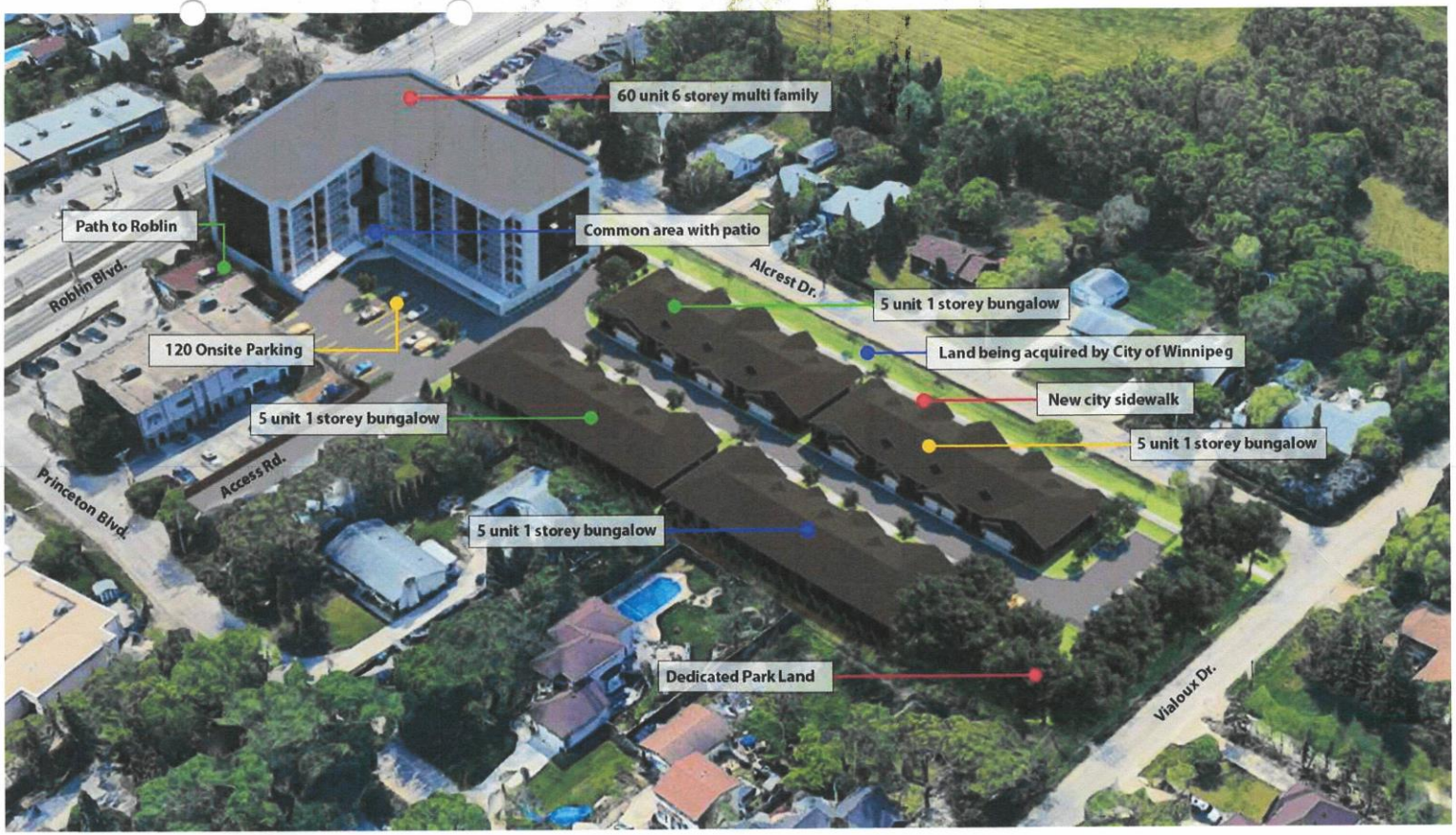

Articulated Design Union 673 Mulvey Ave Winnipeg, MB. R3M 1G2 email: info@designunion.ca	Project Address: 3707 Roblin Blvd. Top down 3/4 perspective	**PRINCETON ESTATES 55** *A Mature Community in the Heart of Charleswood*	**Drawn by:** DM **Date:** Jan 12 2022 **Scale:** **Page Number:** A105	2022-01-12 4:04:16 PM



1 Alcrest - Bungalow

3/32" = 1'-0"

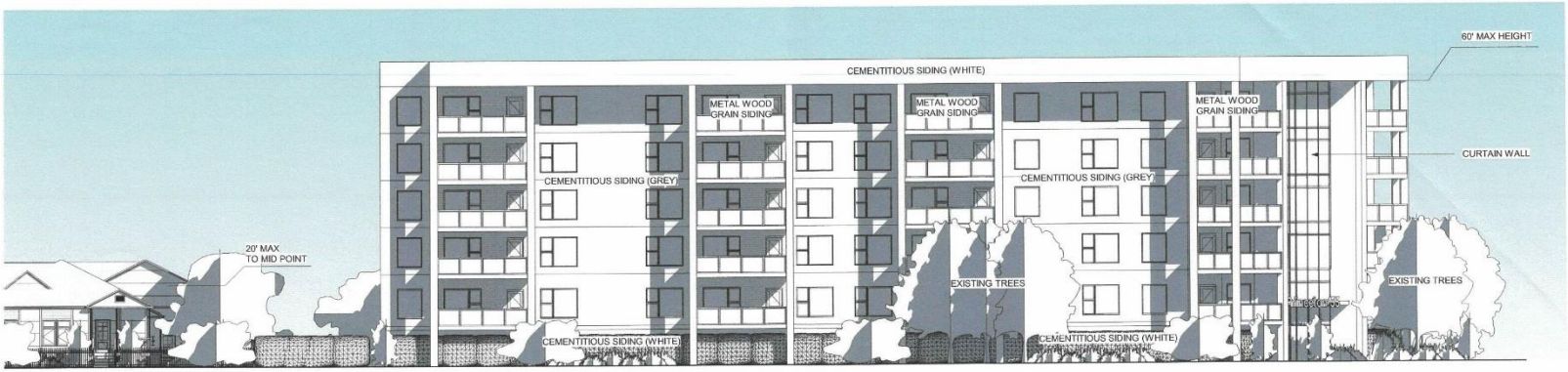

2 Alcrest - Multi Family

1" = 20'-0"

Articulated Design Union 673 Mulvey Ave Winnipeg, MB. R3M 1G2 email: info@designunion.ca	Project Address: 3707 Roblin Blvd. Alcrest Elevations	**PRINCETON ESTATES 55** *A Mature Community in the Heart of Charleswood*	**Drawn by:** DM **Date:** Jan 12 2022 **Scale:** As indicated **Page Number:** A106

2022-01-12 4:04:23 PM



1 Roblin - Multi Family

1" = 20'-0"

Articulated Design Union 673 Mulvey Ave Winnipeg, MB. R3M 1G2 email: info@designunion.ca	Project Address: 3707 Roblin Blvd. Roblin Elevation	**PRINCETON ESTATES 55** *A Mature Community in the Heart of Charleswood*	**Drawn by:**	DM
			Date:	Jan 12 2022
			Scale:	1" = 20'-0"
			Page Number:	A107

2022-01-12 4:04:39 PM

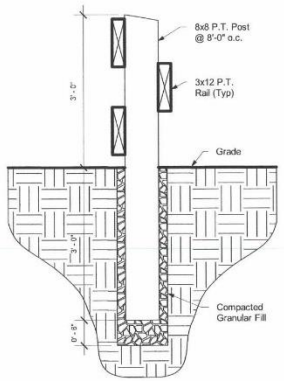

1 3' wood parking rail detail
1/2" = 1'-0"

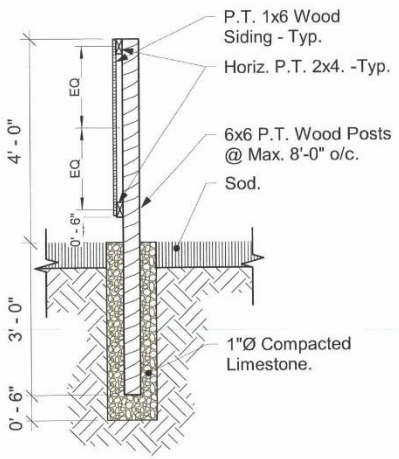

2 4' wood fence detail
1/2" = 1'-0"

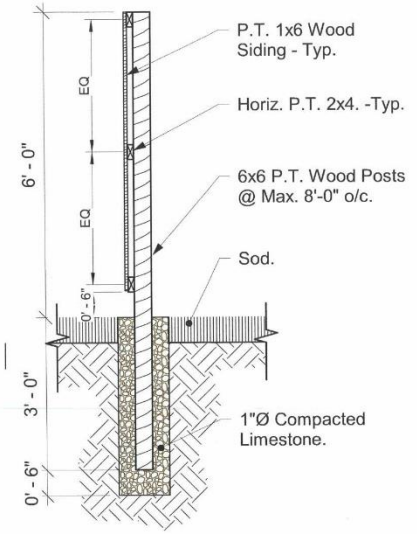

3 6' wood fence detail
1/2" = 1'-0"

Articulated Design Union 673 Mulvey Ave Winnipeg, MB. R3M 1G2 email: info@designunion.ca	Project Address: 3707 Roblin Blvd. Fencing details	PRINCETON ESTATES 55 Not For Construction of Charleswood	**Drawn by:** DM **Date:** Jan 12 2022 **Scale:** 1/2" = 1'-0" **Page Number:** A201

2022-01-12 4:04:39 PM

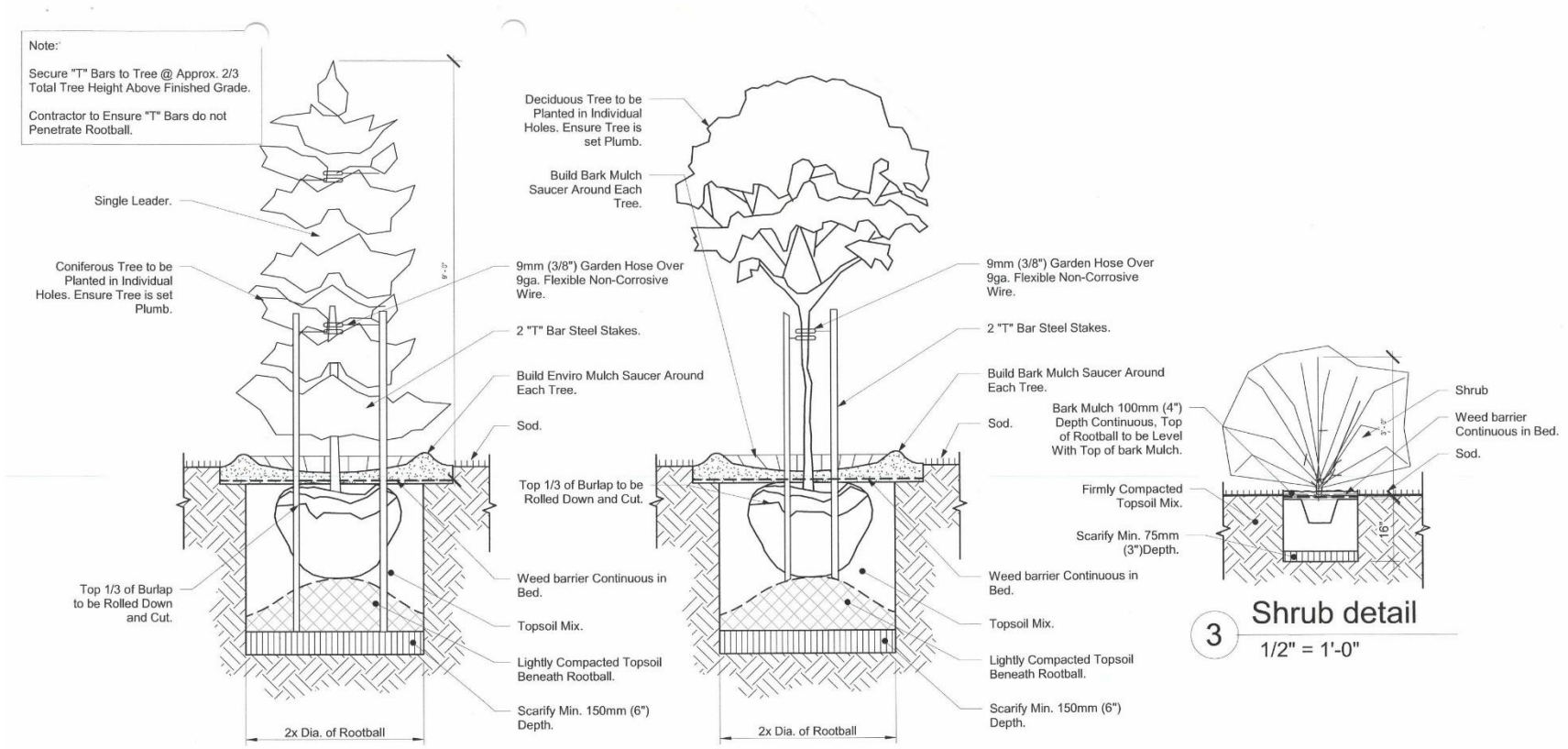

Articulated Design Union 673 Mulvey Ave Winnipeg, MB. R3M 1G2 email: info@designunion.ca	Project Address: 3707 Roblin Blvd. Planting details	**PRINCETON ESTATES 55** Not For Construction *of Charleswood*	**Drawn by:** DM **Date:** Jan 12 2022 **Scale:** 1/2" = 1'-0" **Page Number:** A202

2022-01-12 4:04:39 PM

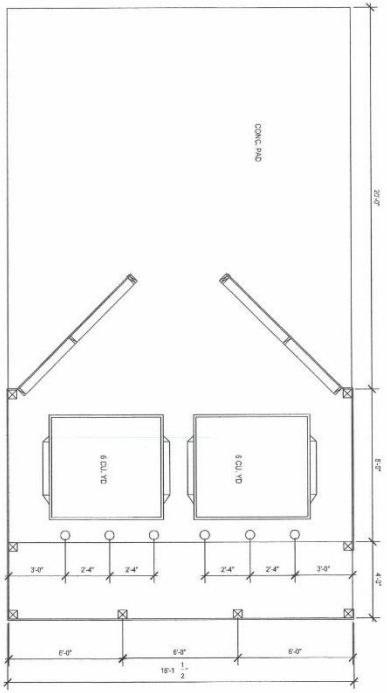

1 G. Enclosure Plan

3/16" = 1'-0"

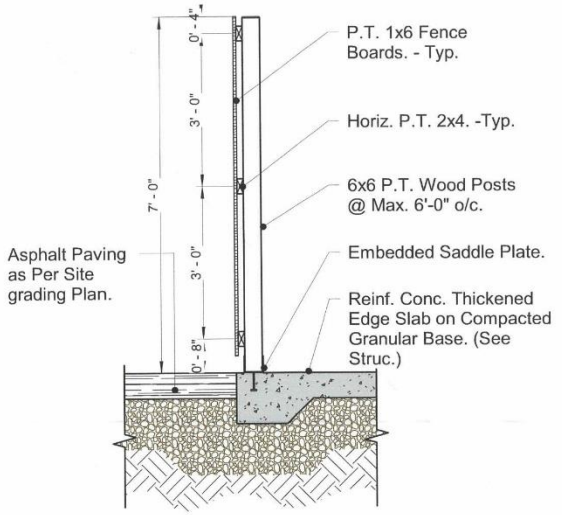

2 G. Enclosure Fence Detail

1/2" = 1'-0"

Articulated Design Union
673 Mulvey Ave Winnipeg, MB. R3M 1G2
email: info@designunion.ca

Project Address:
3707 Roblin Blvd.

Garbage Enclosure

PRINCETON ESTATES 55
Not For Construction *of Charleswood*

Drawn by:	DM
Date:	Jan 12 2022
Scale:	As indicated
Page Number:	A203

2022-01-12 4:04:40 PM

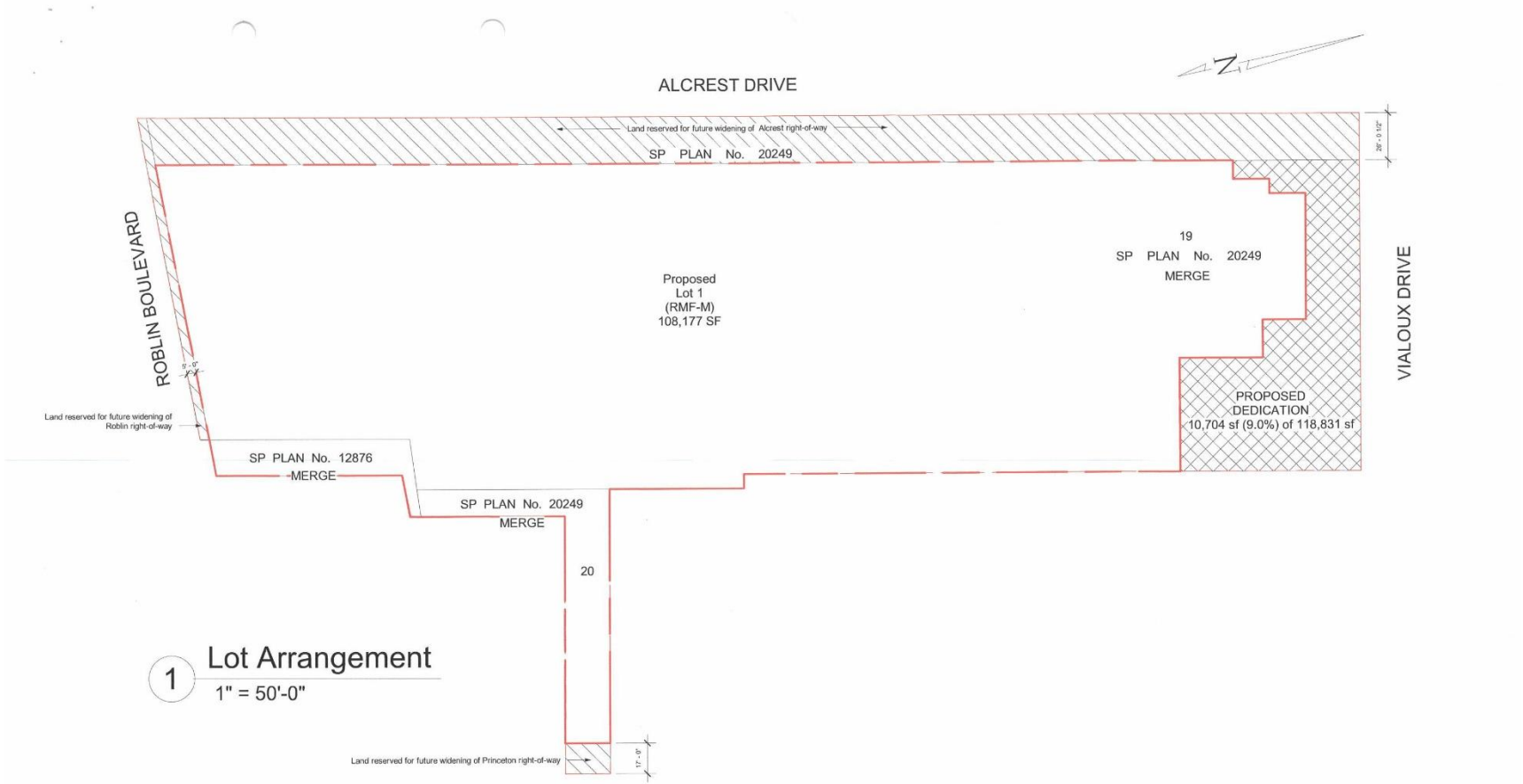

Articulated Design Union 673 Mulvey Ave Winnipeg, MB. R3M 1G2 email: info@designunion.ca	Project Address: 3707 Roblin Blvd. Lot Arrangement	**PRINCETON ESTATES 55** *A Mature Community in the Heart of Charleswood*	**Drawn by:** DM **Date:** Jan 12 2022 **Scale:** 1" = 50'-0" **Page Number:** A306

2022-01-12 4:04:40 PM



Sun Shadows @ 10 AM on 3/21/2021 | Sun Shadows @ 3 PM on 3/21/2021 | Sun Shadows @ 10 AM on 6/21/2021 | Sun Shadows @ 3 PM on 6/21/2021 | Sun Shadows @ 10 AM on 9/21/2021 | Sun Shadows @ 3 PM on 9/21/2021 | Sun Shadows @ 10 AM on 12/21/2021 | Sun Shadows @ 3 PM on 12/21/2021

Articulated Design Union 673 Mulvey Ave Winnipeg, MB. R3M 1G2 email: info@designunion.ca	Project Address: 3707 Roblin Blvd.	**PRINCETON ESTATES 55** *A Mature Community in the Heart of Charleswood*	**Drawn by:**	DM
			Date:	Jan 12 2022
	Sun Study		**Scale:**	1" = 200'-0"
			Page Number:	A401

2022-01-12 4:05:03 PM



Articulated Design Union 673 Mulvey Ave Winnipeg, MB. R3M 1G2 email: info@designunion.ca	Project Address: 3707 Roblin Blvd. Typical Bungalow Layout	**PRINCETON ESTATES 55** *A Mature Community in the Heart of Charleswood*	**Drawn by:**	DM
			Date:	Jan 12 2022
			Scale:	3/32" = 1'-0"
			Page Number:	A501

2022-01-12 4:05:04 PM



Articulated Design Union 673 Mulvey Ave Winnipeg, MB. R3M 1G2 email: info@designunion.ca	Project Address: 3707 Roblin Blvd. Typical 6 storey Layout	**PRINCETON ESTATES 55** *A Mature Community in the Heart of Charleswood*	**Drawn by:**	DM
			Date:	Jan 12 2022
			Scale:	3/64" = 1'-0"
			Page Number:	A502

2022-01-12 4:05:04 PM