Minutes – Executive Policy Committee – July 13, 2022

Report – Standing Policy Committee on Property and Development, Heritage and Downtown Development – July 4, 2022

Item No. 16 Subdivision and Rezoning – 230 University Crescent (Waverley West Ward) File DASZ 15/2022

EXECUTIVE POLICY COMMITTEE RECOMMENDATION:

The Executive Policy Committee concurred in the recommendation of the Standing Policy Committee on Property and Development, Heritage and Downtown Development and submitted the following to Council:

1. That the subdivision under Development Application No. DASZ 15/2022 be approved for preparation as a plan of subdivision (the "Plan") by a Manitoba Land Surveyor in accordance with the map dated June 14, 2022, and attached as Schedule "A" and with the Proposed By-law attached as Appendix "B" to this report, with such changes as may be required, and registration in the Winnipeg Land Titles Office, subject to the following conditions:

    A. That the Developer be required to enter into a Development Agreement with the City pursuant to subsection 259(1) of The City of Winnipeg Charter in accordance with the report of the Administrative Coordinating Group, dated June 9, 2022 and attached as Schedule "B' to this report, with the following amendments:

        i. Add the following new Condition under Section I – Plan Considerations:

            "3) That the proposed public road connecting D'Arcy Drive be deleted."

        ii. Add the following new Conditions under Section IV – General Comments:

            "2) The public service will work with the developer to design the active transportation pathway to be generally located on the east side of the primary row of trees along University Crescent, to the satisfaction of Director of Public Works and the Assiniboia Community Committee.

Report – Standing Policy Committee on Property and Development, Heritage and Downtown Development – July 4, 2022

EXECUTIVE POLICY COMMITTEE RECOMMENDATION (continued):

3) The public service will work with the developer to design the active transportation pathway to be located on the west side of University Crescent, with a distance between 4 – 6 metres of separation from the roadway and the active transportation corridor, to the satisfaction of Director of Public Works and the Assiniboia Community Committee."

iii. In Section I – Plan Considerations, amend Conditions 1) and 2) by deleting "6.5 m" and replacing with "up to 12 m""

iv. In Section V – Servicing Conditions, amend Condition 3) a) i) by deleting "Street lighting; and," and replacing with "Street and walkway lighting; and,"

2. That the Winnipeg Zoning By-law No. 200/2006 be amended by adding the North Campus Planned Development Overlay 2 (PDO-2 North Campus), attached as Schedule "C," subject to the following amendments:

A. That Section 7 and 8 be deleted in its entirety.

B. That all succeeding sections be renumbered accordingly.

3. That the Winnipeg Zoning By-law No. 200/2006 be amended by rezoning the subject land to an "RMU PDO-2 North Campus" Residential Mixed-Use District, "RMF-S PDO-2 North Campus" Residential Multi-Family (Small) District, and "PR1 PDO-2 North Campus" Parks and Recreation (Neighbourhood) 1 District, as shown on the map dated June 14, 2022 and included within Schedule "A", subject to the following conditions:

A. That the Developer enter into a Zoning Agreement with the City pursuant to subsection 240(1) of The City of Winnipeg Charter in accordance with the following:

i. For those portions of the Owner's Land zoned "RMU PDO-2 North Campus" Residential Mixed Use and "RMF-S PDO-2 North Campus" Residential Multi-Family (Small), the Owner must submit plans showing the location and design of any and all proposed:

Report – Standing Policy Committee on Property and Development, Heritage and Downtown Development – July 4, 2022

EXECUTIVE POLICY COMMITTEE RECOMMENDATION (continued):

a. buildings
b. accessory parking areas
c. private approaches
d. garbage enclosures
e. fencing
f. landscaping
g. free-standing signage

on the Owner's Land ("Works") to the City's Director of Planning, Property and Development ("Director") and the Assiniboia Community Committee for approval prior to the issuance of any building or development permit, and thereafter must construct the Works in substantial conformance with the approved plans and maintain the Works to the satisfaction of the Director.

ii. That the applicant shall submit design guidelines to the Director and the Assiniboia Community Committee for approval prior to the approval of any Plan Approval application for development within the planned area.

4. That the City enter into, execute and deliver with the Developer:

A. a Development Agreement in accordance with Recommendation 1; and

B. a Zoning Agreement in accordance with Recommendation 2,

and such other agreements as determined necessary by the City Solicitor/Director of Legal Services to implement the intent of the foregoing (the "Ancillary Agreement").

5. That authority be delegated to the City's Director of Planning, Property and Development (the "Director") to negotiate and approve the terms and conditions of the Development Agreement, the Zoning Agreement and any Ancillary Agreements in accordance with this report and such other terms and conditions determined necessary by the City Solicitor/Director of Legal Services to protect the interests of the City.

6. That, upon instruction from the Director of Planning, Property and Development, the Director of Legal Services/City Solicitor prepare a By-law in accordance with this report and bring same directly to Council for first reading at the next available Council meeting.

Report – Standing Policy Committee on Property and Development, Heritage and Downtown Development – July 4, 2022

EXECUTIVE POLICY COMMITTEE RECOMMENDATION (continued):

7. That, upon instruction from the Director of Planning, Property and Development, the Director of Legal Services/City Solicitor be directed to return the By-law to Council to be given second and third reading to the By-law if a legal plan of subdivision (the "Plan"), prepared by the Manitoba Land Surveyor in accordance with Recommendations 1 and 7 of this Report, and all associated ancillary fees (the "Fees") are submitted to the City within 2 years after the By-law has been given first reading.

8 That the matter will be deemed to be concluded and all approvals in connection with this matter will expire if the Plan and all associated ancillary fees (the "Fees") are not submitted within 2 years after the By-law has been given first reading unless the developer applies for an extension of time before the expiration of the 2-year period and Council approves the extension.

9. That the subdivision section of the By-law will come into force when the Development Agreement is fully executed and the Plan is registered in the Winnipeg Land Titles Office.

10. That the zoning section of the By-law will come into force when the Zoning Agreement is registered in the Winnipeg Land Titles Office by way of caveat against the lands described therein.

11. That the By-law will be repealed without coming into force 1 year after the date it is enacted if the Plan and the Zoning Agreement are not registered in accordance with recommendations 9 and 10 unless the developer applies for an extension of time before the expiration of the 1-year period and Council approves the extension.

12. That this matter will be deemed to be concluded and all approvals in connection with this matter will expire if the necessary Plan approval signatures on behalf of the City have not been secured within 1 year after the date on which the By-law is enacted unless the developer applies for an extension of time before the expiration of the 1-year period and Council approves the extension.

13. That the Proper Officers of the City be authorized to do all things necessary to implement the intent of the foregoing.

Report – Standing Policy Committee on Property and Development, Heritage and Downtown Development – July 4, 2022

DECISION MAKING HISTORY:

Moved by Councillor Gilroy,

That the recommendation of the Standing Policy Committee on Property and Development, Heritage and Downtown Development be concurred in and forwarded to Council.

Yea:	Bowman, Allard, Browaty, Chambers, Gilroy, Mayes, Rollins	7
Nay:		0

Carried

STANDING COMMITTEE RECOMMENDATION:

On July 4, 2022, the Standing Policy Committee on Property and Development, Heritage and Downtown Development concurred in the recommendation of the Assiniboia Community Committee, with the following amendments:

- In Recommendation 1.A.ii.2), add the word "generally" immediately before "located on the east side"

- Add the following new Recommendation 1.A.iii.:

  "iii. In Section I – Plan Considerations, amend Conditions 1) and 2) by deleting "6.5 m" and replacing with "up to 12 m""

- Add the following new Recommendation 1.A.iv.:

  "iv. In Section V – Servicing Conditions, amend Condition 3) a) i) by deleting "Street lighting; and," and replacing with "Street and walkway lighting; and,"

and forwarded the matter to the Standing Policy Committee on Property and Development, Heritage and Downtown Development.

Report – Standing Policy Committee on Property and Development, Heritage and Downtown Development – July 4, 2022

DECISION MAKING HISTORY (continued):

COMMUNITY COMMITTEE RECOMMENDATION:

On June 27, 2022, the Assiniboia Community Committee concurred in the recommendation of the Winnipeg Public Service, with the following amendments:

- In Recommendation 1.A., delete the period after the words "Schedule "B' to this report" and replace with the following:

  ", with the following amendments:

  i. Add the following new Condition under Section I – Plan Considerations:

     "3) That the proposed public road connecting D'Arcy Drive be deleted."

  ii. Add the following new Conditions under Section IV – General Comments:

     "2) The public service will work with the developer to design the active transportation pathway to be located on the east side of the primary row of trees along University Crescent, to the satisfaction of Director of Public Works and the Assiniboia Community Committee.

     3) The public service will work with the developer to design the active transportation pathway to be located on the west side of University Crescent, with a distance between 4 – 6 metres of separation from the roadway and the active transportation corridor, to the satisfaction of Director of Public Works and the Assiniboia Community Committee."

and forwarded the matter to the Standing Policy Committee on Property and Development, Heritage and Downtown Development.

PUBLIC HEARING SUMMARY

File: DASZ 15/2022

Before: Assiniboia Community Committee
Councillor Gillingham, Chairperson
Councillor Klein
Councillor Lukes

Public Hearing: June 27, 2022
Council Building, 510 Main Street

Applicant: Scatliff + Miller + Murray Inc. (Tom Janzen)

Subject:



APPLICANT : Scatliff + Miller + Murray (Tom Janzen)
FILE : DASZ 15/2022
PROPOSAL : An application for the approval of the plan of subdivision shown outlined above as may be determined by Council and for a proposed zoning change to By-law No. 200/2006 by rezoning the land shown outlined above from a "PR2" PARKS AND RECREATION 2 (COMMUNITY) DISTRICT to an "RMU PDO-2 NORTH CAMPUS" RESIDENTIAL MIXED USE DISTRICT, an "RMF-S PDO-2 NORTH CAMPUS" RESIDENTIAL MULTI-FAMILY (SMALL) DISTRICT and a "PR1 PDO-2 NORTH CAMPUS" PARKS AND RECREATION 1 (NEIGHBOURHOOD) DISTRICT to facilitate the establishment of the North Campus Lands Development by the creation of the lot and block plan, public reserve and private rights-of-way for future residential and commercial development. **For information, phone R. Galston, Planner at 204-986-8645.**

Premises Affected: 230 University Crescent

For submission to: The Standing Policy Committee on Property and Development, Heritage and Downtown Development

Prepared by: L. Cowan, Senior Committee Clerk
Assiniboia Community Committee

Report date: June 29, 2022

Community Committee Recommendation:

On June 27, 2022, the Assiniboia Community Committee concurred in the recommendation of the Winnipeg Public Service, as amended, and recommended to the Standing Policy Committee on Property and Development, Heritage and Downtown Development:

1. That the subdivision under Development Application No. DASZ 15/2022 be approved for preparation as a plan of subdivision (the "Plan") by a Manitoba Land Surveyor in accordance with the map dated June 14, 2022, and attached as Schedule "A" and with the Proposed By-law attached as Appendix "B" to this report, with such changes as may be required, and registration in the Winnipeg Land Titles Office, subject to the following conditions:

    A. That the Developer be required to enter into a Development Agreement with the City pursuant to subsection 259(1) of The City of Winnipeg Charter in accordance with the report of the Administrative Coordinating Group, dated June 9, 2022 and attached as Schedule "B' to this report***, with the following amendments:***

        i. Add the following new Condition under Section I – Plan Considerations:

            "3) That the proposed public road connecting D'Arcy Drive be deleted."

        ii. Add the following new Conditions under Section IV – General Comments:

            "2) The public service will work with the developer to design the active transportation pathway to be located on the east side of the primary row of trees along University Crescent, to the satisfaction of Director of Public Works and the Assiniboia Community Committee.

3) The public service will work with the developer to design the active transportation pathway to be located on the west side of University Crescent, with a distance between 4 – 6 metres of separation from the roadway and the active transportation corridor, to the satisfaction of Director of Public Works and the Assiniboia Community Committee."

2. That the Winnipeg Zoning By-law No. 200/2006 be amended by adding the North Campus Planned Development Overlay 2 (PDO-2 North Campus), attached as Schedule "C," subject to the following amendments:

   A. That Section 7 and 8 be deleted in its entirety.

   B. That all succeeding sections be renumbered accordingly.

3. That the Winnipeg Zoning By-law No. 200/2006 be amended by rezoning the subject land to an "RMU PDO-2 North Campus" Residential Mixed-Use District, "RMF-S PDO-2 North Campus" Residential Multi-Family (Small) District, and "PR1 PDO-2 North Campus" Parks and Recreation (Neighbourhood) 1 District, as shown on the map dated June 14, 2022 and included within Schedule "A", subject to the following conditions:

   A. That the Developer enter into a Zoning Agreement with the City pursuant to subsection 240(1) of The City of Winnipeg Charter in accordance with the following:

      i. For those portions of the Owner's Land zoned "RMU PDO-2 North Campus" Residential Mixed Use and "RMF-S PDO-2 North Campus" Residential Multi-Family (Small), the Owner must submit plans showing the location and design of any and all proposed:

         a. buildings
         b. accessory parking areas
         c. private approaches
         d. garbage enclosures
         e. fencing
         f. landscaping
         g. free-standing signage

         on the Owner's Land ("Works") to the City's Director of Planning, Property and Development ("Director") and the Assiniboia Community Committee for approval prior to the issuance of any building or development permit, and thereafter must construct the Works in substantial conformance with the approved plans and maintain the Works to the satisfaction of the Director.

ii. That the applicant shall submit design guidelines to the Director and the Assiniboia Community Committee for approval prior to the approval of any Plan Approval application for development within the planned area.

4. That the City enter into, execute and deliver with the Developer:

A. a Development Agreement in accordance with recommendation 1; and

B. a Zoning Agreement in accordance with recommendation 2,

and such other agreements as determined necessary by the City Solicitor/Director of Legal Services to implement the intent of the foregoing (the "Ancillary Agreement").

5. That authority be delegated to the City's Director of Planning, Property and Development (the "Director") to negotiate and approve the terms and conditions of the Development Agreement, the Zoning Agreement and any Ancillary Agreements in accordance with this report and such other terms and conditions determined necessary by the City Solicitor/Director of Legal Services to protect the interests of the City.

6. That, upon instruction from the Director of Planning, Property and Development, the Director of Legal Services/City Solicitor prepare a By-law in accordance with this report and bring same directly to Council for first reading at the next available Council meeting.

7. That, upon instruction from the Director of Planning, Property and Development, the Director of Legal Services/City Solicitor be directed to return the By-law to Council to be given second and third reading to the By-law if a legal plan of subdivision (the "Plan"), prepared by the Manitoba Land Surveyor in accordance with Recommendations 1 and 7 of this Report, and all associated ancillary fees (the "Fees") are submitted to the City within 2 years after the By-law has been given first reading.

8 That the matter will be deemed to be concluded and all approvals in connection with this matter will expire if the Plan and all associated ancillary fees (the "Fees") are not submitted within 2 years after the By-law has been given first reading unless the developer applies for an extension of time before the expiration of the 2-year period and Council approves the extension.

9. That the subdivision section of the By-law will come into force when the Development Agreement is fully executed and the Plan is registered in the Winnipeg Land Titles Office.

10. That the zoning section of the By-law will come into force when the Zoning Agreement is registered in the Winnipeg Land Titles Office by way of caveat against the lands described therein.

11. That the By-law will be repealed without coming into force 1 year after the date it is enacted if the Plan and the Zoning Agreement are not registered in accordance with recommendations 9 and 10 unless the developer applies for an extension of time before the expiration of the 1-year period and Council approves the extension.

12. That this matter will be deemed to be concluded and all approvals in connection with this matter will expire if the necessary Plan approval signatures on behalf of the City have not been secured within 1 year after the date on which the By-law is enacted unless the developer applies for an extension of time before the expiration of the 1-year period and Council approves the extension.

13. That the Proper Officers of the City be authorized to do all things necessary to implement the intent of the foregoing.

Note: The wording in bold and italics denotes amendments made by the Community Committee.

The Assiniboia Community Committee provided the following supporting reasons for its recommendation:

1. For the University Crescent, to allow for the separated at corridors, when you think of the density of population that is being proposed, multiple 20-story units, multiple high-rise buildings, it needs to be a separated environment for pedestrians and cyclists on University Crescent.

2. Population usage is one of the reasons, the second reason is this is a rare opportunity to highlight 100 years of greenspace and to highlight greenspace and create a ceremonial destination entrance to the University of Manitoba. So, this is an opportunity to create greenspace, to create an incredible entrance to the University of Manitoba.

3. And I also want to put a comment in regarding the D'Arcy Drive connection. So, this development probably won't happen in that end, we heard, anywhere from 40-50 years. I would highly imagine the road won't be there in 40-50 years with the riverbank the way it's happening right now, the instability of it. But if we look at a lot of the policies it talks about contiguous corridor greenspace along the rivers edge. So, I really believe that in 30-40 years if the road, if D'Arcy Drive is still there they can make an amendment to the development agreement. But for now, I think, for the responses I've heard from the public, I'm asking that that little section of roadway not be included, we leave the corridor the way it is. If in 40 years, 50 years, people want to come back and do an amendment to the development agreement, they can.

Objections under the Charter:

Total number of **v**alid objections as per section 125(2) – 12

In accordance with section 236.1(1), the threshold for sufficient objection has not been met.

Exhibits Filed:

1. Application dated March 8, 2022
2. Revised application dated March 8, 2022
3. Notification of Public Hearing dated May 27, 2022
4. Manitoba Status of Titles 1761557/1, 2870813/1
5. Letter of authorization dated October 15, 2021 from the University of Manitoba (Naomi Andrew) to UM Properties GP Inc.
6. Letter of authorization dated December 29, 2021 from The City of Winnipeg to UM Properties LP
7. Letter of Authorization dated March 7, 2022 from UM Properties (Greg Rogers) to Scatliff + Miller + Murray
8. Surveyor's Plan dated December 13, 2021
9. Southwood Lands Transportation Impact Study dated July, 2020
10. Plans (1 page)
11. Report from the Urban Planning Division dated June 14, 2022
12. Inspection Report
13. Communication dated June 21, 2022 from Sandra McKenzie in opposition to the application
14. Communication dated June 21, 2022 from Harry Foerster in opposition to the application
15. Communication dated June 22, 2022 from Harry Foerster in opposition to the application
16. Communication dated June 22, 2022 from Marilyn Clarke in opposition to the application
17. Communication dated June 22, 2022 from Barbara Metrycki in opposition to the application
18. Communication dated June 23, 2022 from Karen Rice in opposition to the application
19. Communication dated June 24, 2022 from Les Wiens in opposition to the application
20. Communication dated June 24, 2022 from Pat Silver with respect to the application
21. Communication dated June 24, 2022 from Jonathan Taylor in opposition to the application
22. Communication dated June 24, 2022 from Doris Sabourin in opposition to the application
23. Presentation titled "UM Properties North Campus Development" dated June 27, 2022 from Tom Janzen in support of the application

Exhibits Filed (continued):

24. Communication dated June 24, 2022 from Joelle Lavallee in opposition to the application
25. Presentation titled “Presentation to the Assiniboia Community Committee” dated June 27, 2022 from Greg Rogers in support of the application
26. Communication dated June 24, 2022 from Guy LeGras in opposition to the application
27. Communication dated June 24, 2022 from Jolene Le in opposition to the application
28. Communication titled “North Campus Lands Secondary Plan Recommendations” dated June 27, 2022 from Mark Cohoe with respect to the application
29. Slides showing locations of existing and proposed trees along University Crescent, submitted by the Winnipeg Public Service at the public hearing
30. Recording of Representations

REPRESENTATIONS:

In Support:

Tom Janzen
Greg Rogers
Evan Sinclair

In Opposition:

Marilyn Clarke
Harry Foerster
Joelle Lavallee
Jolene Le
Guy LeGras
Sandra McKenzie
Barbara Metrycki
Karen Rice
Doris Sabourin
Jonathan Taylor
Les Wiens
Kel Zacharias

For Information:

Mark Cohoe
Pat Silver

For the City:

R. Galston, Planner, Planning, Property and Development Department
B. Neirinck, Manager of Engineering, Public Works Department
D. Patman, Manager of Transportation, Public Works Department
G. Jasper, Land Development Administrator, Planning, Property and Development Department

Exhibit "11" referred to in File DASZ 15/2022

ADMINISTRATIVE REPORT

Title: DASZ 15/2022 – 230 University Crescent.

Issue: For consideration at the Public Hearing of a subdivision and rezoning application to subdivide the subject site into a lot and block plan, public reserve land, and private and public streets, and to rezone from a "PR2" Parks and Recreation 2 (Community) District to an "RMU PDO-2 North Campus" Residential Mixed Use District, "RMF-S PDO-2 North Campus" Residential Multi-Family (Small" District, and "PR2 PDO-2 North Campus" Parks and Recreation (Neighbourhood) 1 District through the creation of a Planned Development Overlay (PDO) for the subject lands to accommodate the development of a mixed use area.

Critical Path: Assiniboia Community Committee → Standing Policy Committee on Property and Development, Heritage and Downtown Development → Executive Policy Committee → Council as per the Development Procedures By-law and *The City of Winnipeg Charter.*

AUTHORIZATION

Author	Department Head	CFO	CAO
R. Galston, MCP	n/a	n/a	

RECOMMENDATIONS

1. That the subdivision under Development Application No. DASZ 15/2022 be approved for preparation as a plan of subdivision (the "Plan") by a Manitoba Land Surveyor in accordance with the map dated June 14, 2022, and attached as Schedule "A" and with the Proposed By-law attached as Appendix "B" to this report, with such changes as may be required, and registration in the Winnipeg Land Titles Office, subject to the following conditions:

    A. That the Developer be required to enter into a Development Agreement with the City pursuant to subsection 259(1) of The City of Winnipeg Charter in accordance with the report of the Administrative Coordinating Group, dated June 9, 2022 and attached as Schedule "B' to this report.

2. That the Winnipeg Zoning By-law No. 200/2006 be amended by adding the North Campus Planned Development Overlay 2 (PDO-2 North Campus), attached as Schedule "C," subject to the following amendments:

A. That Section 7 and 8 be deleted in its entirety.

B. That all succeeding sections be renumbered accordingly.

3. That The Winnipeg Zoning By-law No. 200/2006 be amended by rezoning the subject land to an “RMU PDO-2 North Campus” Residential Mixed Use District, “RMF-S PDO-2 North Campus” Residential Multi-Family (Small) District, and “PR1 PDO-2 North Campus” Parks and Recreation (Neighbourhood) 1 District, as shown on the map dated June 14, 2022 and included within Schedule “A”, subject to the following conditions:

   A. That the Developer enter into a Zoning Agreement with the City pursuant to subsection 240(1) of The City of Winnipeg Charter in accordance with the following:

      i. For those portions of the Owner’s Land zoned “RMU PDO-2 North Campus” Residential Mixed Use and “RMF-S PDO-2 North Campus” Residential Multi-Family (Small), the Owner must submit plans showing the location and design of any and all proposed:

         (a) buildings;

         (b) accessory parking areas;

         (c) private approaches;

         (d) garbage enclosures;

         (e) fencing;

         (f) landscaping; and

         (g) free-standing signage

      on the Owner’s Land (“Works”) to the City’s Director of Planning, Property and Development (“Director”) and the Assiniboia Community Committee for approval prior to the issuance of any building or development permit, and thereafter must construct the Works in substantial conformance with the approved plans and maintain the Works to the satisfaction of the Director.

      ii. That the applicant shall submit design guidelines to the Director and the Assiniboia Community Committee for approval prior to the approval of any Plan Approval application for development within the planned area.

4. That the City enter into, execute and deliver with the Developer

   A. a Development Agreement in accordance with recommendation 1; and

   B. a Zoning Agreement in accordance with recommendation 2,

   and such other agreements as determined necessary by the City Solicitor/Director of Legal Services to implement the intent of the foregoing (the “Ancillary Agreement”).

5. That authority be delegated to the City’s Director of Planning, Property and Development (the “Director”) to negotiate and approve the terms and conditions of the Development

Agreement, the Zoning Agreement and any Ancillary Agreements in accordance with this report and such other terms and conditions determined necessary by the City Solicitor/Director of Legal Services to protect the interests of the City.

6. That, upon instruction from the Director of Planning, Property and Development, the Director of Legal Services/City Solicitor prepare a By-law in accordance with this report and bring same directly to Council for first reading at the next available Council meeting.

7. That, upon instruction from the Director of Planning, Property and Development, the Director of Legal Services/City Solicitor be directed to return the By-law to Council to be given second and third reading to the By-law if a legal plan of subdivision (the "Plan"), prepared by the Manitoba Land Surveyor in accordance with Recommendations 1 and 7 of this Report, and all associated ancillary fees (the "Fees") are submitted to the City within 2 years after the By-law has been given first reading.

8 That the matter will be deemed to be concluded and all approvals in connection with this matter will expire if the Plan and all associated ancillary fees (the "Fees") are not submitted within 2 years after the By-law has been given first reading unless the developer applies for an extension of time before the expiration of the 2 year period and Council approves the extension.

9. That the subdivision section of the By-law will come into force when the Development Agreement is fully executed and the Plan is registered in the Winnipeg Land Titles Office.

10. That the zoning section of the By-law will come into force when the Zoning Agreement is registered in the Winnipeg Land Titles Office by way of caveat against the lands described therein.

11. That the By-law will be repealed without coming into force 1 year after the date it is enacted if the Plan and the Zoning Agreement are not registered in accordance with recommendations 9 and 10 unless the developer applies for an extension of time before the expiration of the 1 year period and Council approves the extension.

12. That this matter will be deemed to be concluded and all approvals in connection with this matter will expire if the necessary Plan approval signatures on behalf of the City have not been secured within 1 year after the date on which the By-law is enacted unless the developer applies for an extension of time before the expiration of the 1 year period and Council approves the extension.

13. That the proper officers of the City be authorized to do all things necessary to implement the intent of the foregoing.

REASON FOR THE REPORT

- Subdivision and Rezoning applications require a Public Hearing as per the *Development Procedures By-law* and *The City of Winnipeg Charter.*
- The Report is being submitted for the Committee's consideration of the development application at the Public Hearing.

IMPLICATIONS OF THE RECOMMENDATIONS

- If the recommendations of the Winnipeg Public Service are concurred in, the subject property may be subdivided and rezoned per Schedule “A” below.

CONSULTATION

In preparing this Report there was consultation with: N/A

OURWINNIPEG POLICY ALIGNMENT

The proposed development aligns with *OurWinnipeg 2045* through the following directions and policies:

- *6.26 Major Redevelopment Sites*
    - *Designate Major Redevelopment Sites within the Urban Structure for land uses that provide a transformative, sustainable, well-designed and pedestrian-oriented urban environment, through a comprehensive and collaborative secondary planning process.*

WINNIPEG CLIMATE ACTION PLAN ALIGNMENT

One of the Vision Statement’s in the Climate Action Plan is that:

> *Winnipeg facilitates compact development and healthy neighbourhoods that are connected through a network of active and transit-oriented mobility options. This means that the City strategically integrates climate action within both land use and transportation decision-making.*

Strategic Opportunity #3 *Advancing Sustainable Transportation – Increasing Mobility Options and Shift to Zero Emission Vehicles*

> *Increasing access to mobility options and fuel switching are key directions for reducing emissions from transportation. Key directions aim to directly shift residents out of single occupancy vehicles through sustainable transportation options with lower or no emissions (walking, cycling, public transit, carshare, and carpooling) or indirectly enable diverse mobility choices through the development of higher density, and more complete communities* (p.vi)
>
> *3.1 Increase Use and Efficiency of Public Transit Systems*
>
> *3.2 Increase the Density of Urban Development Along Key Transit Corridors.*

Strategic Opportunity #4 *Facilitate Compact, Complete Development and Increase Density*

> *4.1 Increase Strategic Infill Development that Provides Access to and Capitalizes on Existing and Planned Corridors with Frequent Transit Service*
>
> *4.3 Pursue Transit-Oriented Development*

WINNIPEG POVERTY REDUCTION STRATEGY ALIGNMENT

Consideration was given as to whether this report connects to any of the specific Goals and Objectives in the *Poverty Reduction Strategy* (PRS) and it was determined that the PRS is not applicable to this specific report.

SUBMITTED BY

Department	Planning, Property and Development
Division	Urban Planning
Prepared by	R. Galston, MCP
Date:	June 14, 2022
File No.	DASZ 15/2022

List of Schedules and Attachments

- **Appendix "A," Planning Discussion.**
- **Schedule "A," of File** DASZ 15/2022**,** Assiniboia **Community Committee, dated June 14, 2022**
- **Schedule "B," Report of the Administrative Co-ordinating group, dated June 9, 2022, 2022, Re: Proposed Subdivision and Rezoning on land located at 230 University Crescent.**
- **Schedule "C," North Campus Planned Development Overlay 2 (PDO-2 North Campus)**
- **Appendix "B," Proposed By-law**
- **Appendix "C," North Campus Lands Secondary Plan policies**

APPENDIX 'A'

DATE:	June 14, 2022
FILE:	**DASZ 15/2022**
RELATED FILES:	na
COMMUNITY:	Assiniboia Community
NEIGHBOURHOOD #:	2.64 (Montcalm) & 2.61 (Agassiz)

SUBJECT: For consideration at the Public Hearing of a subdivision and rezoning application to subdivide the subject site into a lot and block plan, public reserve land, and private and public streets, and to rezone from a "PR2" Parks and Recreation 2 (Community) District to an "RMU PDO-2 North Campus" Residential Mixed Use District, "RMF-S PDO-2 North Campus" Residential Multi-Family (Small" District, and "PR1 PDO-2 North Campus" Parks and Recreation 2 (Neighbourhood) District through the creation of a Planned Development Overlay (PDO) for the subject lands to accommodate the development of a mixed use area

LOCATION: 230 University Crescent

LEGAL DESCRIPTION: SP LOTS 1, 2, 3, 4 AND 7 PLAN 22535 WLTO EXC OUT OF SAID LOTS 1 AND 3: PLAN 60144 WLTO SAID SP LOT 7 BEING SUBJECT TO THE RESERVATIONS AND PROVISOES AS MORE FULLY SET FORTH IN TRANSFER A71177 WLTO IN RL 4 TO 7 PARISH OF ST VITAL

PARCEL "A" PLAN 17862 WLTO IN RL 6 PARISH OF ST VITAL



APPLICANT: Scatliff + Miller + Murray, Inc. (Tom Janzen)
201 Portage Avenue, Unit 1120
Winnipeg, MB R3B 3K6

OWNERS: The University of Manitoba
Administration Building, Room 202
Winnipeg, MB R3T 2N2

City of Winnipeg
185 King Street, 3rd Floor
Winnipeg, MB R3B 1J1

RECOMMENDATION: Approval, subject to conditions

HISTORY

North Campus Lands Secondary Plan

- **On January 28, 2021, Council gave third reading to the *North Campus Lands Secondary Plan By-law***

Pre-Application (PA 21-115898)

- **In April, 2021, the Winnipeg Public Service provided a feedback letter to the applicant, providing comments on the proposed Subdivision and Rezoning of the subject site.**

DISCUSSION

SITE DESCRIPTION

- As shown in Figure 1, the subject site encompasses the former location of the Southwood Golf and Country Club, to the north of the University of Manitoba's Fort Garry campus, IG Field, and other recreational facilities. The site is bisected by University Crescent, and is located in both the Montcalm and Agassiz Neighbourhoods of the Waverley West Ward.
- The subject site has a total lot area of approximately 112.6 acres. It has been vacant land since 2013.
- The property is currently zoned "PR2" Parks and Recreation (Community) 2, and is located within the Areas of Stability – Recent Communities Policy Area under *the Complete Communities Direction Strategy 2.0*. The subject site is also adjacent to Pembina Highway, which is designated as a Regional Mixed-Use Corridor.

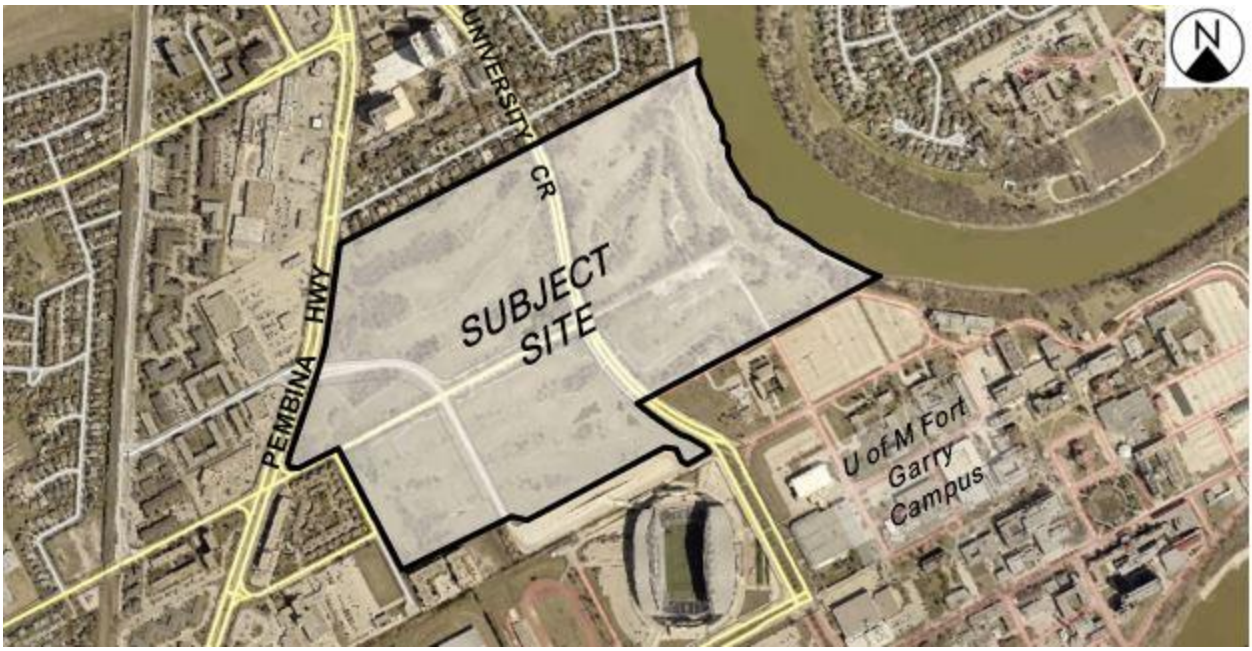

Figure 1: Aerial Photo of Subject Site and Surrounding Uses *(flown 2021)*

SURROUNDING LAND USE AND ZONING (See Figure 2)

North: A mix of residential and commercial uses zoned “R1-L” Residential Single-Family (Large), “RMF-M” Residential Multi-Family (Medium), and “C1” Commercial Neighbourhood.

South: University lands and residential uses zoned “EI” Education and Institutional and “RMF-M” Residential Multi-Family (Medium).

East: Red River, then residential uses zoned “R1-L” Residential Single Family (Large).

West: Pembina Highway, then commercial uses zoned “C3” Commercial Corridor and “C2” Commercial Community.

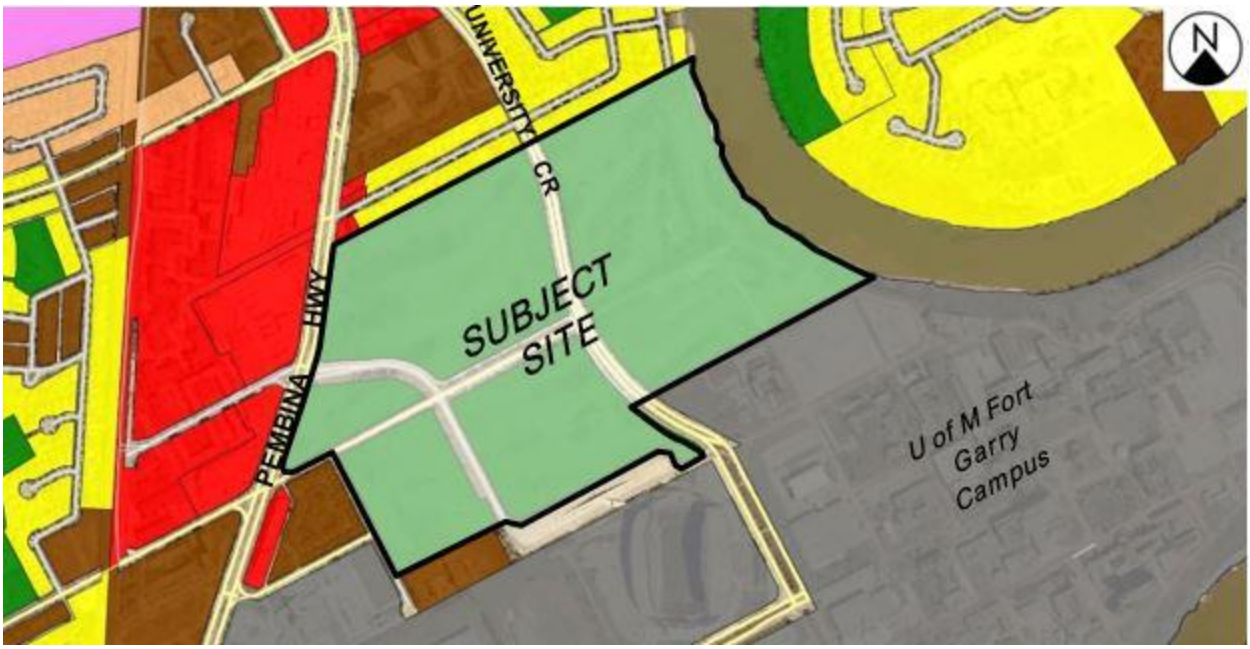

Figure 2: Zoning of the site and surrounding area

DESCRIPTION OF THE PROPOSED DEVELOPMENT

- The applicant is proposing to subdivide the existing six (6) lots and one (1) parcel on the subject site and create a total of 50 lots, three (3) public reserves, and new public and private streets and lanes.
- The applicant also proposes to rezone the land from the existing “PR2” Parks and Recreation 2 (Community) district through the creation of a Planned Development Overlay (PDO) which will regulate future development on the subject site.
- In a letter of intent submitted by the applicant, it is expressed that the proposed development will function as a direct extension of the existing University of Manitoba Fort Garry campus, which is currently directly to the south of the subject site.
- This area will accommodate a mix of uses, including residential uses. The applicant notes that it is anticipated that more than 10,000 new residential units will be constructed by the time development is fully built out.
- Of the proposed lots, there will be:
    - 41 lots zoned “RMU PDO-2 North Campus” Residential Mixed Use.
    - Four (4) lots zoned “RMF-S PDO-2 North Campus” Residential Multi-Family (Small).
    - Four (4) lot zoned “PR1 PDO-2 North Campus” Parks and Recreation (Neighbourhood) 1.
    - Four (4) lots to be developed as private streets.
- The permitted uses and related use-specific standards of the proposed PDO are discussed below, in the “Rezoning and North Campus Planned Development Overlay (PDO)” section of this report.

- No Variance or Conditional Use application is associated with the proposed development.
- No building plans or design drawings have been submitted with this application.

Public Reserves and Active Transportation Network

- The applicant proposes to create three (3) public reserves, which will have a total area of approximately 8.7 acres. This is in addition to 7.5 acres of privately-owned greenspace. Taken together, this is approximately 16.2 acres of greenspace within the proposed development.
- Portions of the public reserve lands will include space for active transportation (AT) pathways which will provide links for pedestrians and cyclists within the subject site, provide the opportunity to connect to existing and future AT pathways to and from the University of Manitoba's Fort Garry campus, and from adjacent neighbourhood and the nearby Bishop Grandin Parkway AT trail network.

Public and Private Streets

- Three (3) existing public streets within the subject site, including University Crescent, Markham Road, and Bohemier Trail, are to remain open as public streets.
- As noted above, a total of four (4) private streets are proposed for the proposed development, including the maintenance of an existing private portion of Markham Road east of University Crescent. These private streets will be 66 feet in width.
- Please see Figure 3, which shows the proposed lots and public and private street.

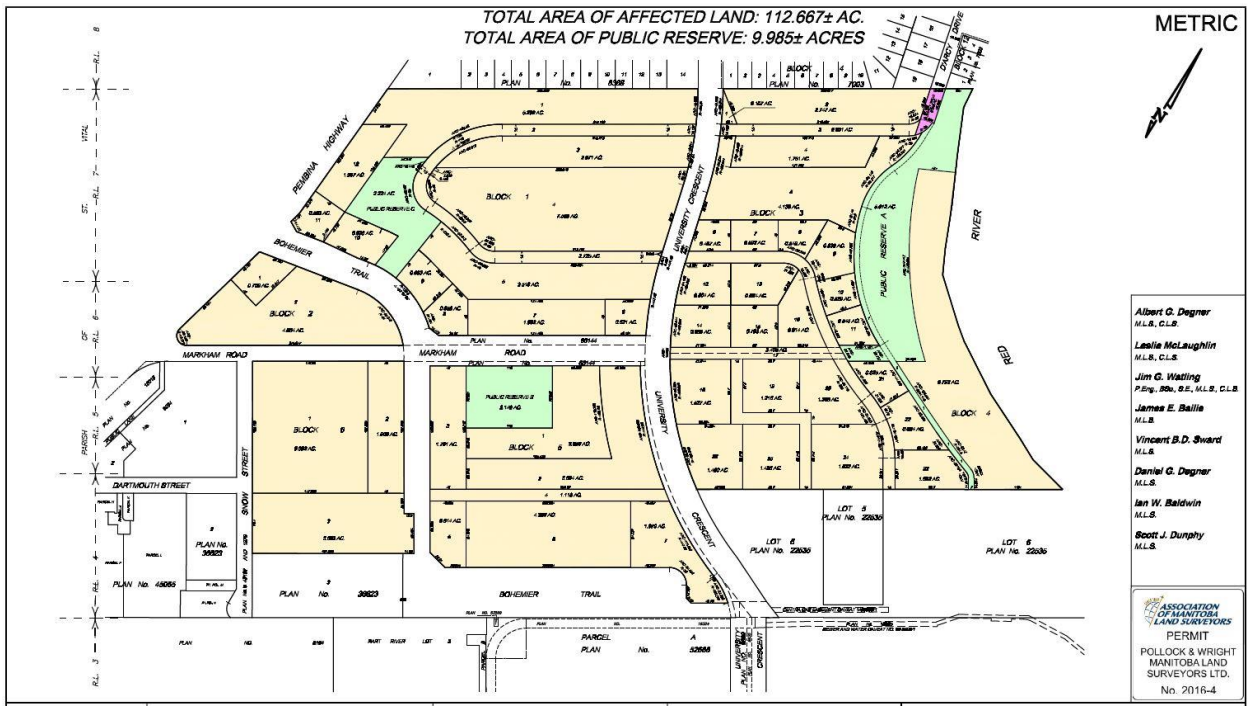

Figure 3: Surveyor's Plan showing proposed lots and public and private streets in the subject site

Background and Collaboration

- **As noted in the History section of this report, the applicant applied for a Pre-Application to explore the development potential for this site. Further to the Pre-Application, the applicant engaged in follow up discussions with the Winnipeg Public Service.**

ANALYSIS AND ISSUES

OURWINNIPEG AND COMPLETE COMMUNITIES DIRECTION STRATEGY

- *OurWinnipeg 2045* is the City's long-range development plan. Per *OurWinnipeg 2045*, the subject site is identified as a Major Redevelopment Site.
- *6.26 Major Redevelopment Sites*
    - *Designate Major Redevelopment Sites within the Urban Structure for land uses that provide a transformative, sustainable, well-designed and pedestrian-oriented urban environment, through a comprehensive and collaborative secondary planning process.*

COMPLETE COMMUNITIES DIRECTION STRATEGY 2.0

- *Complete Communities Direction Strategy* is one of four direction strategies supporting *OurWinnipeg*, the city's long-range development plan, and has statutory authority as a secondary plan. The strategy guides land use and development in Winnipeg.
- In May, 2022, Council approved an updated version of Complete Communities, the *Complete Communities Direction Strategy 2.0*. This updated version replaces the earlier version of the Complete Communities Direction Strategy.
- Below are relevant goals and policies from the *Complete Communities Direction Strategy 2.0*.

B.1. General Growth

- Policies in the "General Growth" section of the *Complete Communities Direction Strategy 2.0* direct growth to strategic locations within the City of Winnipeg.

Goal 3

3.0 Direct the highest residential and employment densities to areas that can provide the best transit service.

Policies

Align maximum permitted residential densities with transit

3.1 Where compatible with surrounding land uses and subject to other applicable policies of this By-law, direct the highest multi-family residential densities to the areas that provide the best transit service.

3.1.1 High multi-family residential densities may be encouraged Downtown and in proximity to existing rapid transit station and Corridors. Support the highest densities in this range in closest proximity to transit stations.

3.1.2. Medium multi-family residential densities may be encouraged in proximity to the existing and planned Primary Transit Network. Support the highest densities in this range in close proximity to transit stations.

3.1.3. Multi-family residential densities elsewhere in the Urban Structure will be directed in accordance with other policies from other sections of this By-law.

C5. Major Redevelopment Sites

- Under the *Complete Communities Direction Strategy 2.0,* the proposed development site is designated as a Major Redevelopment Site. With regard to this proposal, key goals and policies guiding development of Major Redevelopment Sites include:

Goal 1

1.0 Require development in Major Redevelopment Sites to be guided by a secondary plan.

Policies

1.1 Require that the development in Major Redevelopment Sites be guided by a front end inclusive planning process, culminating in a secondary plan.

Goal 2

2.0 Capitalize on the proximity of Major Redevelopment Sites to rapid transit and high-frequency transit.

Policies

Transit Oriented Development

2.1 Promote development in accordance with Transit Oriented Development principles, where proximate to rapid transit stations and Primary Transit Network stations.

Transit frequency

2.2 Support rapid transit and high-frequency transit service by encouraging medium-to-high density residential, commercial, and mixed uses at rapid transit stations and Primary Transit Network stations, in accordance with Policy section 3.1 of the General Growth section.

Transportation linkages

2.3 Create strong, multi-modal and active transportation linkages from each Major Redevelopment Site to Downtown, other Major Redevelopment Sites, Mixed Use Centres, Corridors, Parks, major attractions and employment areas.

Goal 3

3.0 Design Major Redevelopment Sites as Complete Communities that embody principles of sustainability within a well-designed, walkable, and active transportation friendly environment.

Policies

Mixed use

3.1 Provide a mix of employment, high-density housing, retail and service uses within Major Redevelopment Sites in a way that complements the needs of adjacent communities.

Minimum density

3.3 Promote the use of minimum density standards for new development

Compatibility

3.4 Encourage the transition of development towards the outer edges of Major Redevelopment Sites so that it is sensitive to the scale, massing, height, form and character of the surrounding area.

3.5 Implement mitigation measures to minimize any negative impacts new development may have on neighbouring streets, parks, and properties.

Conservation

3.6 Require that development be sensitive to conserving historically significant features and resources.

Housing

3.7 Support a range of different types, tenures and unit sizes in housing opportunities.

Complete streets

3.8 Promote complete streets, enabling safe and convenient spaces for pedestrians, cyclists, public transit ridership and motorists to promote physical activity, health, and active transportation.

NORTH CAMPUS LANDS SECONDARY PLAN

- **The *North Campus Lands Secondary Plan* was adopted by Council on January 28, 2021**

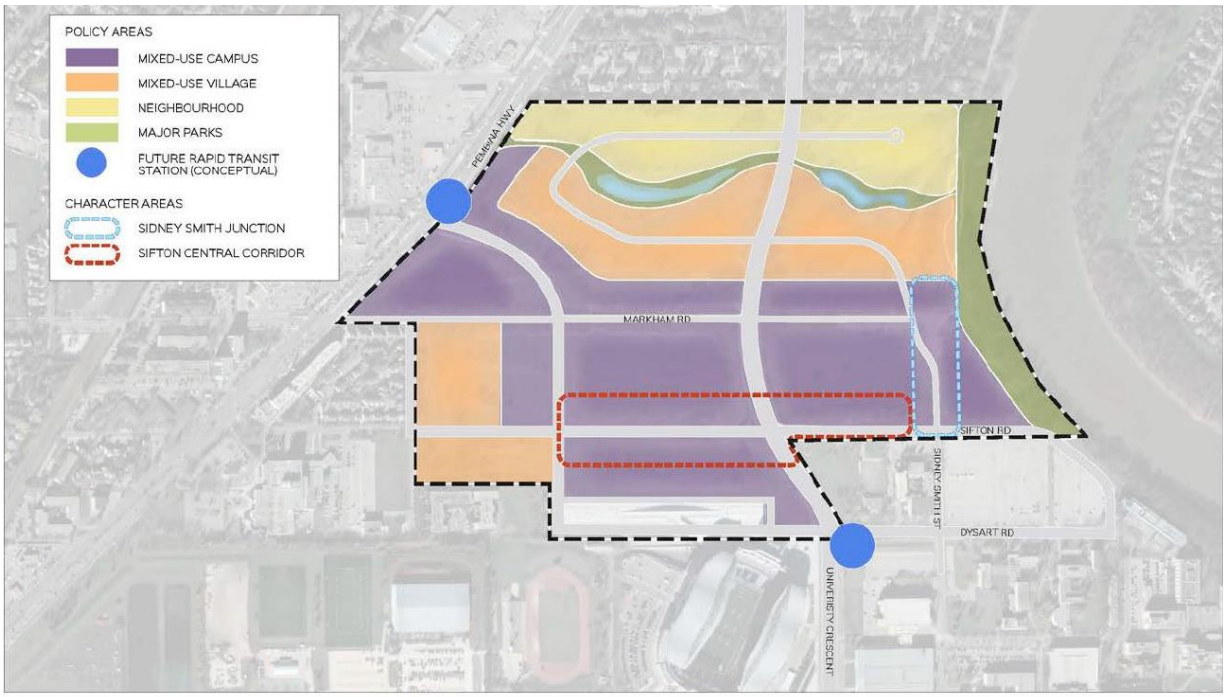

POLICY MAP 1 LAND USE PLAN
North Campus Secondary Plan By-law

Figure 4: Land use and transportation concept map as per the *North Campus Lands Secondary Plan*

- **Policy areas in the Secondary Plan include the following:**

Mixed-Use Campus

- *This Policy Area will encourage larger and taller buildings, including high-rise towers above human-scaled podiums to create a positive relationship with the street. This Policy Area provides a substantial portion of the institutional uses and residential density for North Campus, helping to animate the community and create a critical population mass to support local businesses, campus activities, and public transit. In terms of land use, this Policy Area will accommodate a wide range of multi-family residential units in addition to a range of commercial, cultural, and institutional uses that are incidental to University of Manitoba operations such as education and research facilities.*
- *In addition to the General Mixed-Use Campus Policies, this Policy Area will promote two important Character Areas, each with additional policies to further define their intended form and function:*
    - *The Sifton Central Corridor – extending along Sifton Road, is envisioned as an activated commercial main street in the heart of North Campus.*
    - *The Sydney Smith Junction – situated along Sydney Smith Street between Markham Road and Sifton Road, will establish a unique destination within the Plan Area by leveraging key cultural elements from its adjacency to the Red River and direct connection to the existing campus.*

Mixed-Use Village

- *The Mixed-Use Village Policy Area will accommodate primarily mid-rise residential development types with a wide range of dwelling unit sizes and tenures. Institutional and commercial may also be accommodated at grade where appropriate. However, this Policy Area will be predominantly of residential character, with some small-scale local commercial permitted at grade. The intent of the area is to contribute to the variety of building scales featured throughout North Campus, while transitioning from higher-densities and building heights adjacent to areas designated Mixed-Use Campus down to lower-densities and building heights adjacent to the Neighbourhood Policy Area and existing low-rise residential areas.*

Neighbourhood

- *This land use designation defines the most northerly end of the Plan Area towards the existing low-density residential community on Thatcher Drive. Generally, residential building types in North Campus are intended to transition from mid-rise apartment buildings in the Mixed-Use Village Policy Area down to lower density, low-rise ground-entry housing forms in the Neighbourhood Policy Area. At the south end of the Neighbourhood area will be integrated stormwater facilities and park space that will provide recreational opportunities, natural amenities, and functional land drainage infrastructure. The Neighbourhood Policy Area also features a prominent gateway to the North Campus, located at the northern boundary of the Plan Area on University Crescent, which provides an opportunity for attractive placemaking features.*

Major Parks

- *A connected network of parks and other open spaces is a critical feature of the vision for the North Campus. As identified on the Land Use Plan (Policy Map 1), two open space*

areas are designated as Major Parks: The Riverside Park along the Red River; and, the Linear Neighbourhood Park along the planned stormwater management pond(s) to the south of the Neighbourhood Policy Area.

- *With the North Campus Lands expected to remain privately owned, the policies of this section outline the provisioning expectations in accordance with the City of Winnipeg Development Agreement Parameters.*
- *In addition to the Major Parks identified on the Land Use Plan, North Campus will contain numerous other open space areas, including: smaller pocket parks, urban plazas, and courtyards that are connected throughout the Plan Area by a pedestrian and cycling network for the enjoyment of residents, students, employees, and visitors.*

Secondary Plan Policies

- **Relevant policies for these areas are appended to this report as Appendix "C." Please refer to this appendix for additional information.**

Building Heights:

- **The Secondary Plan provides a range of heights to be accommodated in the plan area. Please refer to Figure 4 below. These areas are:**
    - **Low Rise (maximum four (4) storeys (49 feet; 15 metres)**
    - **Mid-Rise (maximum eight (8) storeys (92 feet; 28 metres)**
    - **High-Rise (maximum 25 storeys (249 feet; 76 metres)**

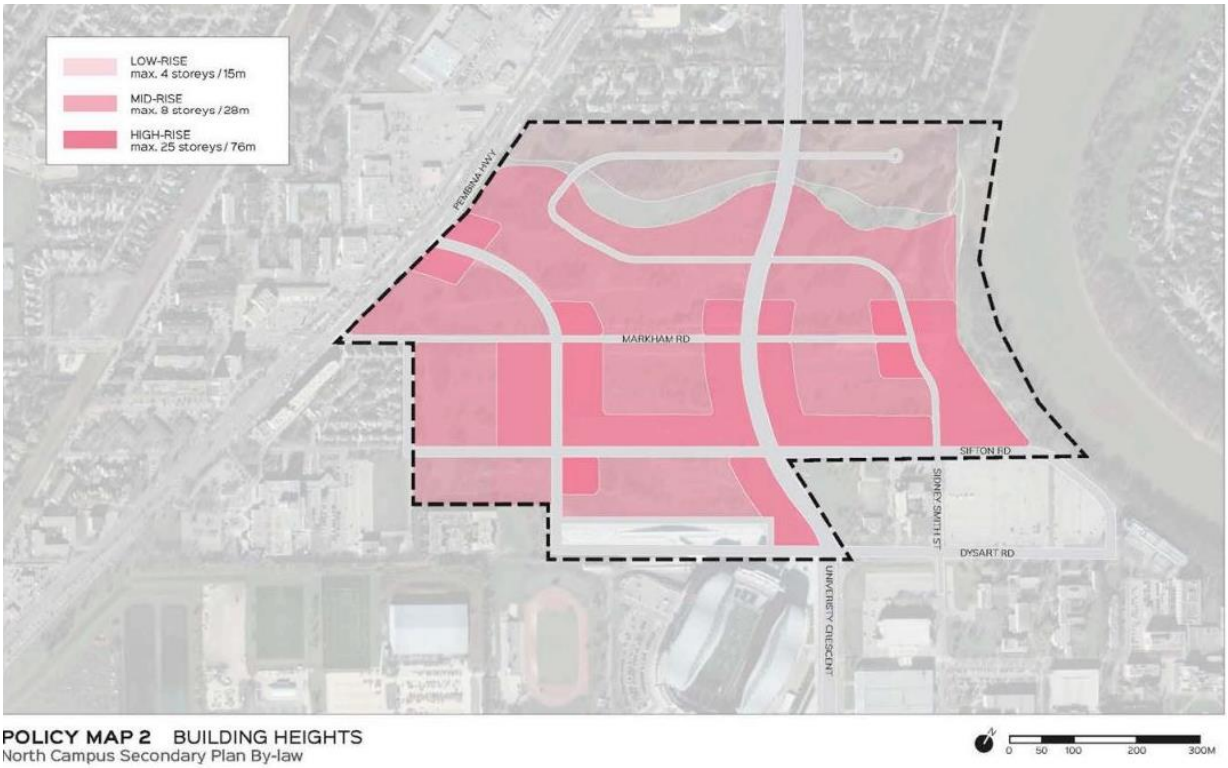

Figure 5: Building heights concept map per the *North Campus Lands Secondary Plan*

TRANSIT ORIENTED DEVELOPMENT (TOD) HANDBOOK

- The site would also be considered Transit Oriented given the immediate adjacency to the Southwest Rapid Transit Corridor (SWRTC). The Transit Oriented Development Handbook was endorsed in principle by Council on February 22, 2012 and provides a framework that guides and facilitates mixed-use, pedestrian-oriented infill development along rapid transit corridors and high frequency transit corridors.
- Principles that can be applied at a site-specific level include:

    1. *Medium to high density development that is greater than the community average.*
    2. *A mix of uses.*
    3. *Compact, high quality pedestrian-oriented environment.*
    4. *An active, defined centre.*
    5. *Innovative parking strategies.*
    6. *Public leadership.*

SUBDIVISION

- As noted above, the subject site is currently made up of six (6) lots and one (1) parcel. Subdivision is required in order to establish a total of 45 lots within seven (7) blocks, five (5) public services, three (3) private streets, and one (1) public lane.

Street Network

- As noted above, the primary point of access to the subject site is to be from University Crescent, which currently runs north-south through the subject site.
- Additional access to development areas within the subject site will be provided by the maintenance of existing streets, Markham Road and Bohmeimier Trail, the latter of which provides rapid transit access to the site and to the existing Fort Garry university campus.
- A network of private streets will provide local access to the proposed lots.

Parks and Active Transportation

- The provision of public reserves as proposed helps to enhance and expand the active transportation (AT) system that connects The University of Manitoba's Fort Garry campus to adjacent neighbourhoods and the city's greater AT network through connections to the Bishop Grandin Parkway AT trail to the north, and the Pembina Highway dedicated cycling lanes to the west.

REZONING AND **NORTH CAMPUS PLANNED DEVELOPMENT OVERLAY (PDO)**

- As noted above, the subject site is currently zoned "PR2" Parks and Recreation 2 (Neighbourhood). The applicant proposes to create a Planned Development Overlay (PDO) of the Winnipeg Zoning By-law, to be known as the North Campus Planned Development Overlay 2. The purpose of this PDO is to implement the policies of the *North Campus Lands Secondary Plan* through the regulation of development within the subject site.
- Under the proposed PDO, the subject lands will be rezoned to a mix of residential mixed-use, multi-family residential, and parks and recreation zoning districts. These are:
    - "RMU PDO-2 North Campus" Residential Mixed-Use;

- “RMF-S PDO-2 North Campus” Residential Multi-Family (Small);
- “PR1 PDO-2 North Campus” Parks and Recreation (Neighbourhood).

- As shown in Figure 4, below, the subject site is broken into Areas 1.A, 1.B, 2 and 3. The size of these areas and how they correspond with the proposed PDO and zoning districts is as follows:

  Area 1A

  - To be zoned “RMU PDO-2 North Campus” Residential Mixed-Use.
  - Approximately 26.3 acres in area.

  Area 1B

  - To be zoned “RMU PDO-2 North Campus” Residential Mixed-Use.
  - Approximately 28.8 acres in area.

  Area 2

  - Located approximately in the middle of the subject site, on both the west and east side of University Crescent.
  - To be zoned “RMU PDO-2 North Campus” Residential Mixed-Use.
  - Approximately 15.4 acres in area.

  Area 3

  - Located at the northern portion of the subject site, adjacent to existing residential properties in the Montcalm and Agassiz Neighbourhoods.
  - To be zoned “RMF-S PDO-2 North Campus” Residential Multi-Family (Small).
  - Approximately 12.8 acres in area.

  Open Space

  - A total of 16.5 acres of open space is proposed to be included within the subject site.

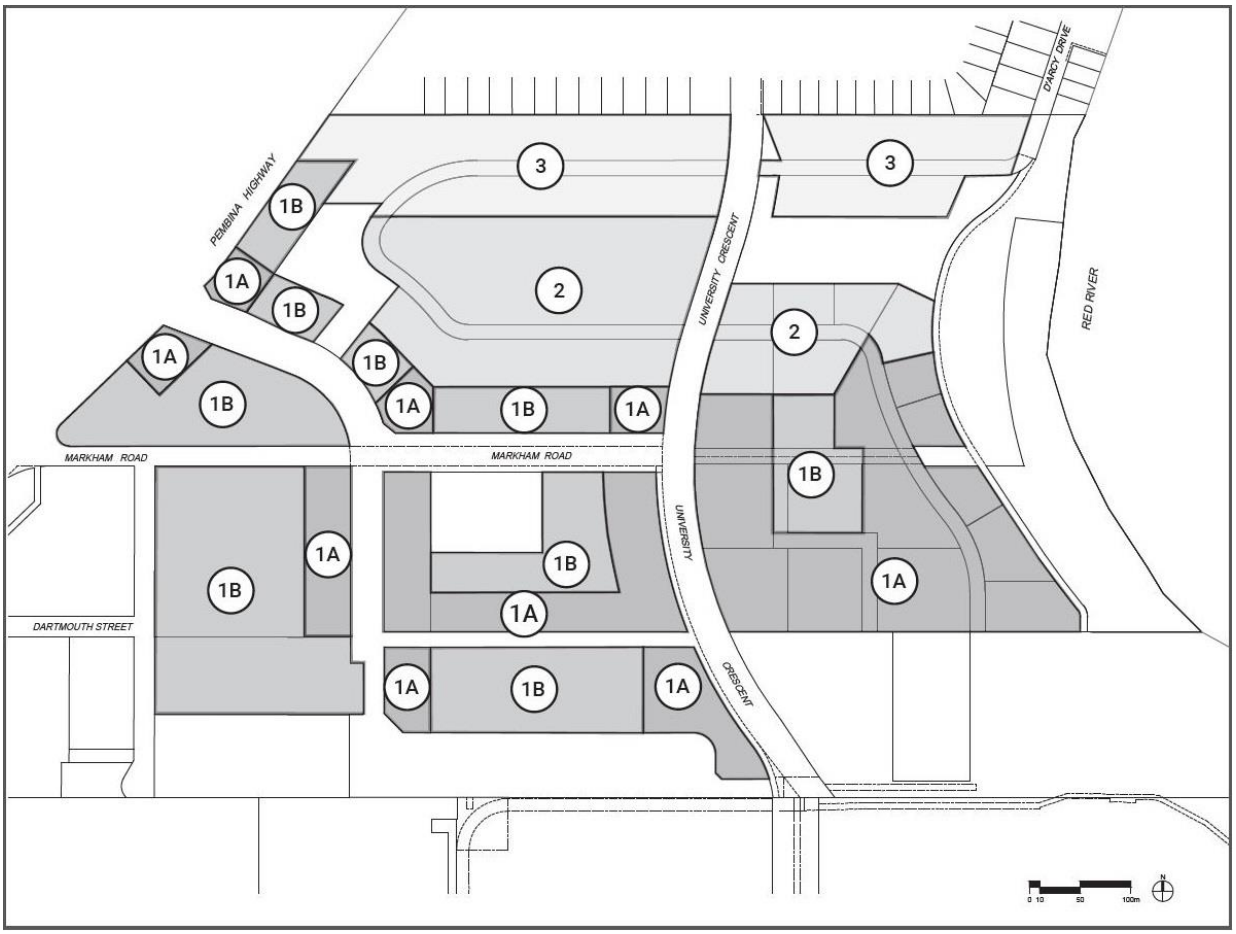

Figure 6: Map of proposed areas under the North Campus Planned Development Overlay 2 (PDO)

Proposed Land Uses

- Concerning proposed uses within the North Campus PDO, these proposed uses are shown in relation to existing uses that would apply under the Zoning By-law (Table 1).

Table 1: Proposed Land Uses

	"RMU PR2 North Campus" (Area 1 & 2)	*"RMF-S PR2 North Campus" (Area 3)*
Single-Family Dwelling	~~o Permitted~~ o **Prohibited**	o ~~Permitted~~ o **Prohibited**
	"RMU PR2 North Campus" (Area 1 & 2)	*"RMF-S PR2 North Campus" (Area 3)*
Two-Family Dwelling	~~o Permitted~~ ~~o~~ **Prohibited**	~~o Permitted~~ o **Prohibited**
Amusement enterprise (indoor)	~~o Prohibited~~ o **Permitted in Area 1** o **Conditional in Area 2**	o Prohibited
Amusement Enterprise (Outdoor)	o Prohibited o **Conditional in Area 1**	o Prohibited

Auditorium/Concert Hall/Theatre/Cinema	○ Prohibited ○ **Permitted in Area 1**	○ Prohibited
College or University	○ Conditional ○ **Permitted in Area 1**	○ Conditional
Cultural Centre	○ Conditional ○ **Permitted in Area 1 & 2**	○ Conditional
Dormitory	○ Conditional ○ **Permitted in Area 1 & 2**	○ Conditional
Drinking Establishment	○ Prohibited ○ **Permitted in Area 1 (to a max. of 5,000 s.f.)**	○ Prohibited
Hotel or Motel	○ Prohibited ○ **Permitted in Area 1**	○ Prohibited
Supermarket	○ Prohibited ○ **Permitted in Area 1 (to a max. of 55,000 s.f.)**	○ Prohibited
Craft Brewery or Distillery	○ Prohibited ○ **Conditional in Area 1**	○ Prohibited
Social Service Facility	○ Prohibited ○ **Conditional in Area 2**	○ Prohibited
Medical/Dental/Optical/ Counselling Clinic	○ Permitted to a maximum of 5,000 s.f. ○ **No max. floor area in Area 1**	○ Prohibited
Gallery/Museum	○ Permitted to a maximum of 10,000 s.f. ○ **No max. floor area in Area 1**	○ Prohibited
Office	○ Permitted to a maximum 5,000 s.f. ○ **No max. floor area in Area 1**	○ Prohibited
Personal Services	○ Permitted to a maximum of 5,000 s.f.; limited hours between 9 AM & 9 PM ○ **Permitted in Area 1 to a max. of 25,000 s.f. and no limit on hours of operation**	○ Prohibited
	"RMU PR2 North Campus" (Area 1 & 2)	"RMF-S PR2 North Campus" (Area 3)
Restaurants	○ Permitted to a maximum of 2,500 s.f. and drive-thrus prohibited ○ **Permitted in Area 1 with no limit on floor area; drive-thrus prohibited**	○ Prohibited
Retail Sales	○ Permitted to a maximum of	○ Prohibited

	5,000 s.f.; limited hours between 9 AM & 9 PM ○ **Permitted in Area 1 to a max. of 40,000 s.f. and limit on hours of operation**	
Key	Regular type: Existing standard for "RMU" District in Zoning By-law to remain **Bold type**: Proposed standard for PDO ~~Strikethrough type~~: Zoning By-law standard to be replaced by PDO	

Proposed Dimensional Standards in Areas 1 and 2

- Concerning Areas 1A, 1B, and 2, the dimensional standards for the proposed development in the "RMU PDO-2 North Campus" district are shown in Table 2, below.

Table 2: Proposed Dimensional Standards in Areas 1 and 2

Lot Area	○ minimum 9,000 square feet
Front Yard	○ ~~minimum 20 feet~~ ○ **minimum zero (0) feet and maximum of 10 feet in proposed Area 1** ○ **minimum zero (0) feet and maximum of 20 feet in Area 2**
Rear Yard	○ ~~minimum 24 feet~~ ○ **minimum 20 feet in Area 1** ○ **minimum 25 feet in Area 2**
Side Yard (Corner)	○ ~~minimum 20 feet~~ ○ **minimum 0 feet and maximum of 10 feet in Area 1** ○ **minimum 0 feet and maximum of 20 feet in Area 2**
Side Yard (Interior)	○ ~~minimum five (5) feet plus additional two (2) feet for each additional building storey to a maximum of 20 feet~~ ○ **minimum zero (0) feet in Area 1;** ○ **minimum five (5) feet in Area 2**
Building Height	○ ~~maximum 100 feet~~ ○ **minimum 35 feet and maximum of 250 feet in Area 1A** ○ **minimum 35 feet and maximum of 92 feet in Area 1B** ○ **maximum 92 feet in Area 2**
Lot Area Per Dwelling	○ ~~minimum 500 square feet~~ ○ **minimum 200 square feet in Area 1A** ○ **minimum 300 square feet in Area 1B** ○ **minimum 400 square feet in Area 2**
Key	Regular type: Existing standard for "RMU" District in Zoning By-law to remain **Bold type**: Proposed standard for PDO ~~Strikethrough type~~: Zoning By-law standard to be replaced by PDO

Proposed Dimensional Standards in Area 3

- Concerning Area 3, the dimensional standards for the proposed development in the "RMF-S PDO-2 North Campus" district are shown in Table 3, below.

Table 3: Proposed Dimensional Standards in Area 3

Lot Area	○ minimum 9,000 square feet (residential uses) ○ minimum 20,000 square feet (public and institutional uses)
Front Yard	○ minimum 20 feet (residential uses) ○ minimum 25 feet (public and institutional uses)
Rear Yard	○ minimum 25 feet (all uses)
Side Yard (Corner)	○ minimum five (5) feet (residential uses) ○ minimum 20 feet (public and institutional uses)
Side Yard (Interior)	○ minimum four (4) feet (residential uses) ○ minimum eight (8) feet (public and institutional uses)
Building Height	~~○ a maximum of 35 feet (all buildings)~~ ○ **a maximum of 49 feet** ○ **a maximum of 35 feet when abutting an existing single-family dwelling, or fall within a 45-degree angular plane**
Lot Area Per Dwelling	○ a minimum of 1,250 square feet
Key	Regular type: Existing standard for "RMU" District in Zoning By-law to remain **Bold type**: Proposed standard for PDO ~~Strikethrough type~~: Zoning By-law standard to be replaced by PDO

Parking Requirements

- In Area 1 of the proposed PDO, the minimum parking requirement shall be 50 percent of the requirements of the Winnipeg Zoning By-law.
- As examples:
    - *Multi-Family Residential* – Instead of 1.5 parking stalls per dwelling unit for multi-family residential uses, the minimum requirement would be 0.75 parking stalls per dwelling unit;
    - *Restaurant* – Instead of 1.0 parking stall for every 100 square feet of floor area, the minimum requirement would be 0.5 stalls per 100 square feet;
    - *Personal Service* – Instead 1.0 parking stall for every 250 square feet of floor area, the minimum requirement would be 0.5 stalls per 250 square feet.
- Additional reductions below the minimum parking required may be considered through a Parking Management Plan.

Design Standards

- The proposed PDO also includes design standards for future development. These standards include:
    - In Area 1, buildings that are four (4) storeys or more must step back all additional floors by a minimum of 10 feet on all portions of the building adjacent to a public

street, park, or plaza. A suitable design alternative to this step-back may be permitted, as determined by the Director.

- In Area 2, buildings that are three (3) storeys or more must step back all additional floors by a minimum of 10 feet on all portions of the building adjacent to a public street, park, or plaza. A suitable design alternative to this step-back may be permitted, as determined by the Director.
- Non-residential buildings must have a minimum of 30 percent of the ground floor façade consisting of windows, doors or display areas on all portions of the building facing a street.
- All buildings must have a main entrance on the façade facing any adjacent street with a direct pedestrian connection.
- Freestanding signage shall not exceed six (6) feet in height.

- Given the policies of the *North Campus Secondary Plan*, which support higher density and mixed-use development, the Urban Planning considers the proposed PDO regulations to align with the policies and policy areas of the Secondary Plan. Moreover, the proposed PDO regulations are appropriate for future development on the subject site, given its location in a Major Redevelopment Site that is serviced by rapid transit.

PUBLIC CONSULTATION

- In 2020, the applicant undertook public consultation efforts in preparation of the North Campus Secondary Plan. This consultation included a stakeholder open house in March, 2020, and a community-wide webinar held in June, 2020.
- Regarding the webinar, the applicant notes that invitations were hand-delivered to 350 residential dwellings in the Agassiz and Montcalm Neighbourhood. A total of 64 residents registered to attend, and 52 persons ultimately attended. These attendees included residents who live on Snow Street, to the west of the subject site, and residents of the single-family residential area of the Agassiz Neighbourhood, to the north of the subject site.

COMPATIBILITY WITH AREA SECONDARY PLAN

Mixed-Use Campus (Area 1.A and 1.B)

- The proposed residential multi-family uses are located in the Medium Density policy areas of the *North Campus Lands Secondary Plan* (Figure 4).
- The proposed “RMU PDO-2 North Campus” zoning district in Area 1.A. and portions of 1.B is compatible with the Mixed-Use Campus policy area of the Secondary Plan, in that these policies support a wide mix of higher density residential uses, institutional and educational uses, and commercial uses. Further, the proposed zoning district regulates sites within these areas so that buildings are oriented toward public streets and park spaces, and the greatest concentration of commercial uses is directed to Sifton Road, and the greatest concentration of institutional and cultural uses is directed to an extension of Sidney Smith Street.

Mixed-Use Village (Area 1.B and 2)

- The proposed “RMU PDO-2 North Campus” zoning district in Area 2 and a portion of Area 1.B is compatible with the Mixed-Use Village policy area of the Secondary Plan, in

that a mix of multi-family residential uses will be the predominant use of land, with limited opportunities for locally oriented commercial and institutional uses accommodated.

Neighbourhood (Area 3)

- The proposed "RMF-S PDO-2 North Campus" zoning district in Area 3 in the PDO is compatible with the Neighbourhood policy area of the Secondary Plan, in that the Secondary Plan supports lower-scale multi-family residential development, such as townhouses and, where appropriate, low-rise apartment buildings. Additionally, the Secondary Plan supports limited community and recreational uses, such as schools or public playgrounds.

Parks and Open Space

- The proposed parks and open space, including active transportation (AT) pathways are consistent with the policies under the *North Campus Lands Secondary Plan*. However, the Winnipeg Public Service recommends some changes to the design of the parks and pathways. These changes are discussed in the report of the Administrative Coordinating Group under Schedule 'B' of this report.

COMPATIBILITY WITH THE SURROUNDING AREA

Separation Distances from Existing Residential Uses

- The proposed zoning district locations are proposed in a manner that future buildings heights will generally step down closer to existing residential properties in the Montcalm and Agassiz Neighbourhoods to the north. Additionally, non-residential uses will be limited to local institutional or educational near these existing residential neighbourhoods.
- In particular, the proposed "RMF-S PDO-2 North Campus" district in Area 3 that is adjacent to the existing residential properties limits any building to a maximum of 49 feet. For any property in Area 3 directly abutting an existing single-family dwelling, the height of any new building should be a maximum of 35 feet or fall within a 45-degree angular plane from the abutting property line.
- In this manner, the proposed PDO will regulate a transition of the scale and massing of development in the plan area, so that there is less visual impact on adjacent single-family dwellings to the north.

Pembina Highway

- As shown in Figure 1, above, portions of the plan area have frontage on Pembina Highway. These portions include proposed parcels under Area 1 and Area 3 under the proposed PDO.
- Under the *Complete Communities Direction Strategy 2.0*, Pembina Highway is designated as a Regional Mixed-Use Corridor, where high-density multi-family residential development at a scale that is compatible with the surrounding area. Is accommodated. Development on Regional Mixed-Use Corridors should enable a comfortable and attractive pedestrian environment.
- The proposed "RMU PDO-2 North Campus" and "RMF-S PDO-2 North Campus" zoning districts under the PDO generally align with policies for Regional Mixed-Use Corridors. In particular, the PDO for Area 1 accommodates a mix of commercial uses and high-density residential development, similar to developments recently approved on Pembina Highway, which are supported by policies for Regional Mixed-Use Corridors.

- With respect to the proposed Area 3 fronting on Pembina Highway at the northwest corner of the plan area, it should be noted that policies for Regional Mixed-Use Corridors accommodate high-intensity and mixed-use development. However, given the close proximity of this portion of Area 3 to lower-density single-family residential uses on Thatcher Drive, the proposed

Parking

- In all zoning district, the Zoning By-law prescribes a minimum number of parking stalls for most uses.
- As noted above in the "Rezoning and North Campus Planned Development Overlay (PDO)" section of this report, the applicant is proposing to permit a minimum parking ratio that is 50 percent less than he Zoning By-law minimum requirement in Area 1 of the PDO.
- The Urban Planning Division is supportive of the proposed parking regulations for Area 1 of the PDO, given that Area 1 is located in close proximity to the Southwest Rapid Transit Corridor. Further, Area 1 is envisioned as a higher-density mixed-use area that is oriented toward university students.

CONDITIONS OF APPROVAL

Zoning Agreement

- The Winnipeg Public Service recommends that the developer enter into a Zoning Agreement with the City of Winnipeg for plan approval by the Director of Planning, Property and Development and the Assiniboia Community Committee, prior to the issuance of building permits.
- The intent of this Plan Approval is to require a review of the final plans with respect to site and building design before building permits are issued. Particular elements of the proposal that will be reviewed at Plan Approval include, but are not limited to:
    - Landscaping throughout the subject site
    - Private approaches
    - Traffic circulation within the subject site
    - Building design, elevations, materials, architectural details
    - Parking, bicycle parking
    - Garbage bin location and access

Servicing Agreement

- The Winnipeg Public Service recommends that the developer enter into a Servicing Agreement with the City of Winnipeg. These items are discussed in the Report of the Administrative Coordinating Group (ACG), which is attached to this report as Schedule "B.

RECOMMENDATION

The Urban Planning Division recommends **approval** for the following reasons:

- The proposed development aligns with *OurWinnipeg 2045,* the *Complete Communities Direction Strategy 2.0,* and the *Transit Oriented Development (TOD) Handbook* in that it provides a variety of housing types and non-residential amenities in a Major

Redevelopment Site that is oriented toward existing rapid transit service so that the greatest building heights and mix of uses is directed in close proximity to rapid transit.

- The proposal aligns with the policies of the *North Campus Lands Secondary Plan* policy objectives in that the proposed PDO will regulate development so that it is street-oriented and locates non-residential uses primarily in the Mixed-Use Campus area of the Secondary Plan.
- The proposal regulates future development that is adjacent to existing lower-density residential properties to the north of the subject site so that it is lower-scaled and thereby reduces visual impacts on these adjacent properties.

This Report Submitted by:
Planning, Property and Development Department
Urban Planning Division

Report Prepared by: R. Galston, MCP
PPD File #: DASZ 15/2022

Schedule "A" for File DASZ 15/2022, Assiniboia Community Committee, dated June 14, 2022

By-Law No. _____

File No. **DASZ 15/2022**

Atlas Sheet No. **AK24**

N

ASSINIBOIA COMMUNITY

Explanation

An application for the approval of the plan of subdivision shown outlined below and for a proposed zoning change to By-law No. 200/2006 by rezoning the land located at east of Pembina Highway, west of the Red River and north and south of Markham Road from a "PR2" PARKS AND RECREATION 2 (COMMUNITY) DISTRICT to an "RMU PDO-2 NORTH CAMPUS" RESIDENTIAL MIXED USE DISTRICT, an "RMF-S PDO-2 NORTH CAMPUS" RESIDENTIAL MULTI-FAMILY (SMALL) DISTRICT and a "PR1 PDO-2 NORTH CAMPUS" PARKS AND RECREATION 2 (NEIGHBOURHOOD) DISTRICT to facilitate the establishment of the North Campus Lands Development by the creation of the lot and block plan, public reserve and private rights-of-way for future residential and commercial development.



THIRD READING : _____ EFFECTIVE DATE : _____

ZONING AGREEMENT : YES ☐ NO ☐ CAVEAT No. _____

SCHEDULE B

REPORT OF THE ADMINISTRATIVE COORDINATING GROUP

RE: PROPOSED SUBDIVISION AND REZONING ON LAND LOCATED AT 230 UNIVERSITY CRESCENT

It is recommended that approval of DASZ 15/2022, if granted, be subject to the applicant entering into a Development Agreement containing the following conditions:

Section I – Plan Considerations

1) The Developer shall, at no expense to the City, legally open property required to widen the east side of the University Crescent right-of-way by 6.5 m, along the full length of the Planned Area abutting University Crescent, to the satisfaction of the Director of Public Works.

2) The Developer shall, at no expense to the City, legally open property required to widen the west side of the University Crescent right-of-way by 6.5 m, along the full length of the Planned Area abutting University Crescent, to the satisfaction of the Director of Public Works.

Section II – Developer Reimbursement

1) The City shall, in accordance with the Land Value section of the Development Agreement Parameters, reimburse the Developer for the property required to widen the University Crescent right-of-way, as determined by and to the satisfaction of the Director of Public Works.

Section III – Engineering Studies

1) The Developer shall, at no expense to the City, conduct geotechnical investigations and develop pavement designs in accordance with the City's "Guidelines for Site Investigation Requirements for Public Works Street Projects", all to the satisfaction of the Director of Public Works.

Section IV – General Comments

1) The Water and Waste Department advises regional wastewater servicing is anticipated to not support full buildout of the development area without upgrades to the existing system. This will be addressed during the permit phases.

Section V – Servicing Conditions

1) Servicing

All water, wastewater and land drainage servicing for the Planned Area shall be private.

The Developer shall enter into encroachment agreement(s), as required, for private infrastructure crossings.

2) Flood Proofing

The Developer shall, at no expense to the City construct and install a Primary Dyke to replace the existing Primary Dyke currently within the University Crescent right-of-way to protect the Planned Area from flooding in accordance with the requirements of the Provincial Dyking Commissioner, as determined by and to the satisfaction of the Director of Water and Waste.

All lands underlying the Primary Dyke shall be either conveyed or dedicated to the City.

3) Regional Street Charges

a) The Developer shall pay to the City, in cash, on demand, their share of the cost of the following services to be installed in University Crescent along the full length of the Planned Area abutting both sides of University Crescent:

i) A 4.0m wide Portland cement concrete lane of pavement and all related works;

A 1.5m Portland cement concrete sidewalk;

Street lighting; and,

Landscaping

All as determined by and to the satisfaction of the Director of Public Works.

b) The Developer shall pay to the City, in cash, prior to the release of subdivision mylars for registration in the Winnipeg Land Titles Office, their share of the cost of the following services previously installed in Pembina Highway along the full length of the Planned Area abutting the east side of Pembina Highway:

i) a 4.0m wide Portland cement concrete lane of pavement and all related works;

a 1.5m Portland cement concrete sidewalk;

Street lighting; and,

Landscaping in the east boulevard;

All as determined by and to the satisfaction of the Director of Public Works.

4) Markham Road

a) The Developer shall, at no expense to the City, construct Portland concrete cement pavement, 10.0m wide by 200mm thick, and all related works including, but not necessarily limited to, street lighting, boulevard landscaping and land drainage sewer(s) within the Markham Road right-of-way, between University Crescent and Pembina Highway, as determined and to the satisfaction of the Director of Public Works.

The Developer grant to the City, at no expense to the City, an easement abutting Markham Road, appropriately sized to accommodate an active transportation facility, as determined by and to the satisfaction of the Director of Public Works.

The Developer shall, at no expense to the City, construct an active transportation facility within the easement, where required, to have a complete facility between University Crescent and Pembina Highway, to the satisfaction of the Director of Public Works.

5) Pavements

The Developer shall, at no expense to the City, construct Portland cement concrete pavements, 7.5m wide by 150mm and all related works including, but not necessarily limited to street lighting, boulevard landscaping and land drainage sewer within the proposed Public Road (extension of D'arcy Drive), all as determined and to the satisfaction of the Director of Public Works.

6) Sidewalks

The Developer shall, at no expense to the City, construct Portland cement concrete sidewalks, and all related works, on the standard alignment, 0.3m from the property line on the east side of Snow Street between Markham Road and the south limit of Snow Street, as determined by and to the satisfaction of the Director of Public Works.

7) Traffic/Pedestrian Control Devices

The Developer shall pay to the City, in cash, on demand, the costs of any traffic control device/pedestrian crossing control to serve the proposed development, and all related works, as determined by and to the satisfaction of the Director of Public Works.

8) Boulevards

a) The Developer shall, at no expense to the City, sod and plant trees on all public boulevards within and fronting on the Planned Area, all in accordance with City specifications and guidelines and, where required, with concept plans prepared by the Developer and submitted to, and approved by, the Director of Public Works.

b) The Developer shall, at no expense to the City, maintain the sod for a period of one year and the trees for a period of two years, in accordance with specifications approved by the Director of Public Works.

9) Utilities

a) The Developer shall, at no expense to the City, cause underground electrical and telephone services to be installed to serve the Planned Area and will pay the full cost to convert any existing overhead services within the Planned Area to underground to the satisfaction of the Director of Public Works.

b) The Developer shall pay all costs associated with the relocation of street lights and other utilities made necessary as a result of, or required to accommodate, the works to be constructed by the Developer to serve the Planned Area, as determined by and to the satisfaction of the Director of Public Works.

10) Construction Traffic

a) The Developer shall ensure that construction traffic uses access routes as determined by the Director of Public Works.

b) The Developer shall maintain, at no expense to the City, the access routes in a clean, dust free and safe condition, free of dropped and tracked-on mud, and shall undertake regular scraping and sweeping of streets until building construction, including landscaping is complete, all as determined by and to the satisfaction of the Director of Public Works.

11) Litter and Refuse Control and Clean-Up

a) The Developer shall, at no expense to the City, and of its own volition, initiate and control the regular cleanup of litter and refuse from the contractors and builders for this development, both on-site and off-site, during the installation of services and construction of buildings, until substantial completion of all construction, as determined by and to the satisfaction of the Director of Public Works.

b) The cleanup of litter and refuse shall be done on a regular basis as determined by the Director of Public Works. This shall include initiating action and assuming any costs in remedying the situation to the satisfaction of the Director of Public Works.

12) Survey Monuments

a) Subsequent to completion of the Planned Area, as determined by the Director of Planning, Property and Development, the Developer shall pay the full costs of having all survey monuments within the Planned Area verified and/or restored by a Manitoba Land Surveyor and shall prepare a Plan of Survey Perpetuating Certain Monuments, confirming the position of all the survey monumentation within the Planned Area, for filing in the Winnipeg Land Titles Office.

b) In certain circumstances where all the survey monuments within the Planned Area have been found or restored to their original positions, upon approval by the Director of Planning, Property and Development, the requirements for Plan of Survey Perpetuating Certain Monuments may be waived.

13) Public Reserve

a) The Developer shall dedicate as Public Reserve at least 8% of the land contained within the overall development area and shall, at no expense to the City, undertake landscape improvements and pathway construction, and pay its share of the cost of services in streets abutting the dedicated land all in accordance with plans and specifications approved by the Director of Public Works and the Director of Planning, Property and Development.

i) The Developer hereby acknowledges that the land identified as Public Reserve for the purposes of Primary Line of Defense, is not credited as Public Park Reserve dedication.

b) If the Developer is unable to dedicate a full 8% of the land, the Developer shall dedicate an amount of land satisfactory to the Director of Public Works and the Director of Planning, Property, and Development, and shall compensate the City for any shortfalls in the amount of land, servicing and improvements not provided, based on the prevailing rate at the time of construction, by the provision of an equivalent cash-in-lieu value, as approved by the Director of Public Works and the Director of Planning Property and Development.

c) Landscape improvements of the Public Reserve lands shall be done in accordance with plans and specifications provided by the Developer and approved, prior to the commencement of construction, by the Director of Public Works and the Director of Water and Waste. The scope of landscaping shall include grading, sodding, land drainage, irrigation and construction of primary pathways.

    i) The City hereby acknowledges that the landscape improvement obligations, for the two Public Reserves west of University Crescent, may be deferred until such time as the area is developed, at which time, the Developer shall be obliged to fulfil the landscape improvements, servicing and pathway requirements, in accordance with plans and specifications provided by the Developer and approved, prior to the commencement of construction, by the Director of Public Works.

    ii) The Developer hereby acknowledges that the dedication of the Public Reserve lands is serving, in part, to preserve and protect existing mature trees there within. To ensure that trees within the proposed Public Reserve lands are preserved and protected, the Developer shall prepare a Tree Protection Plan, in consultation with a City Forester, and shall establish tree protection measures, to the satisfaction of the Director of Public Works

    iii) If the City deems that the provision of servicing, landscape improvements and/or irrigation or water service to the Public Reserve is not required, the Developer shall provide compensation in site amenities at an equivalent value.

d) The Developer shall, at no cost to the City, supply and install property line delineation (ie: fence or bollards), the specific style of which is at the discretion of the Developer, for all private property that is not zoned PR1, to the satisfaction of the Director of Public Works and the Director of Planning, Property and Development. Any fencing that abuts public property shall be located within private property and shall be established, by way of caveat, to be responsibility thereafter of the private property owner to maintain and repair.

e) Given that the property lines between the Public Reserve/Primary Line of Defense and the privately held public open spaces will not be delineated by way of fencing, and in the interest of ensuring consistent maintenance of the entire riverbank land area intended for public use, the Developer shall be responsible for negotiating a Maintenance Agreement for all Public Reserve lands within the Planned Area, subject to approval by the Director of Water and Waste and the Director of Public Works. The Agreement shall include maintenance requirements for the land held as Public Reserve, west of University Crescent.

f) The Developer shall assume responsibility for all Public Reserve sites until they are developed, and throughout the maintenance period until Final Acceptance Certificate for Parks has been issued by the Director of Public Works.

g) The Developer shall, at no expense to the City, maintain the public open space improvements for a period of two years, at minimum, in accordance with specifications approved by the Director of Public Works. Commencement of the maintenance period will correspond with the issuance of Construction Completion for Parks and shall be deemed concluded by the issuance of a Final Acceptance Certificate for Parks. The City reserves the right to impose longer maintenance terms for amenities and features, such as naturalized areas, that the Director of Public Works deems to be beyond the standard scope of development.

h) Public Reserve development should be undertaken by the time the build out has reached 80% and completed before reaching 100%, unless an extension of time has been previously approved, in writing, by the Director of Public Works.

i) Securities for Public Reserve improvements may be reduced following the issuance of a Construction Completion Certificate and site inspection and approval by the City, but shall not be released in full until as-built drawings have been received and accepted as complete by the Director of Public Works and *Final Acceptance for Parks* has been issued.

Section VI – Costs and Fees

1) By-laws and Approvals

The Developer shall pay all of its and the City's costs, fees, and expenses associated with the preparation and attainment of approval for registration of the Zoning By-law(s) and plan(s) of subdivision, including all Municipal Board, Land Titles Office and other fees and expenses, all survey, engineering and advertising fees and costs, and all expenses incidental to the preparation of this Agreement and the physical development of the Planned Area.

2) Professional Fees

a) The Developer shall pay the full cost of all design services, including preliminary engineering studies, servicing reports, servicing criteria, construction drawings and specifications, and grading and landscaping plans and specifications, to be provided by Consulting Engineer(s) approved by the City, for the design of the municipal services, parklands, parkways and associated works required to serve the Planned Area;

b) The Developer shall pay the full cost of construction and landscaping supervision services provided by or on behalf of the City for field inspection, preparation of progress estimates, provision of as-built drawings by March 31 of the year following substantial performance of the work, and all other engineering consulting services related to the installation and acceptance of municipal services, and all associated works to serve the Planned Area.

3) Administration Fees

The Developer shall pay to the City, prior to the release of the subdivision mylars for registration in the Land Titles Office, an administration fee plus applicable GST to help defray the City's administration and related costs associated with the preparation and implementation of the Development Agreement.

THIS REPORT SUBMITTED BY:

Administrative Co-ordinating Group
File No. DASZ 15/2022
June 9, 2022

"*Original Signed by D. Trenchard"*
D. Trenchard, P. Eng.
Land Development Branch
Planning, Property and Development Department

"*Original Signed by M. Gajda"*
M. Gajda, P. Eng.
Engineering Division
Water and Waste Department

"*Original Signed by S. Whitehouse"*
S. Whitehouse, M.C.P.
Urban Planning and Design Division
Planning, Property and Development Department

"*Original Signed by C. Desjardine"*
C. Desjardine, M. Sc., P. Eng.
Transportation Division
Public Works Department

SCHEDULE C

NORTH CAMPUS PLANNED DEVELOPMENT OVERLAY 2
(PDO-2 NORTH CAMPUS)

Purpose

1. The purpose of this overlay is to support the development of the North Campus lands as a Major Redevelopment Site and implement the policies of the North Campus Secondary Plan.

Applicability

2. The PDO-2 North Campus overlay district shall apply to all lands as shown on the attached Map 1.

Development Standards

3. Except to the extent modified by the standards in this overlay, all standards of this By-law apply within the boundaries shown on Map 1.

Alternative Development Patterns

4. For developments with alternative configurations, such as those featuring multiple principal buildings that do not all have frontage on a public street or private access road, the yards classified as front, rear, and side or corner side shall be determined by the Director in order to establish where required setbacks shall apply. The Director shall consider the orientation of the principal building or buildings, pedestrian and vehicular access, site conditions, views from the public right-of-way, and established development patterns of adjacent properties when determining the yards.

Parking and Loading

5. Parking and Loading Management Plan

   (1) A property owner may propose to the Director a Parking and Loading Management Plan prepared by a professional traffic engineer or parking consultant documenting that a reduced amount of off-street parking and/or loading is adequate to meet the needs of the proposed use or combination of uses and to prevent traffic and parking congestion on surrounding streets and/or public lanes.
   (2) If the Director concludes that the proposed Parking and Loading Management Plan will provide off-street parking and/or loading adequate to meet the needs of the proposed use or combination of uses and to prevent traffic or parking congestion on surrounding streets and/or public lanes, the Director may approve the Parking and Loading Management Plan and may reduce the amount of required off-street parking and/or loading required to conform with the approved plan.
   (3) Once a Parking and Loading Management Plan is approved by the Director, the applicable owner shall provide parking spaces and loading spaces in accordance with the requirements of the approved Parking and Loading Management Plan.
   (4) Any owner or authorized lessee of land in the PDO-2 North Campus overlay district may, in accordance with this overlay and this By-law, submit to the Director for approval:
      (a) A Parking and Loading Management Plan for the overlay district; or,
      (b) An amended Parking and Loading Management Plan for the overlay district.

6. Parking Requirements in Proximity to Rapid Transit

(1) Within Area 1 of the PDO-2 North Campus overlay district, the parking spaces required under Table 5-9 of this By-law shall be the maximum amount of accessory parking permitted for a proposed development. The minimum accessory parking requirement shall be 50% of the amounts shown in Table 5-9 of this By-law. Further reductions to the minimum number of required parking spaces within Area 1 may be considered in accordance with clause (1) of section 5 above, subject to the Director's approval of a Parking and Loading Management Plan. Parking reductions do not apply to required bicycle parking.

Design Review

7. Design Review Required

(1) Any proposed development, redevelopment, expansion, free standing signage, or exterior alteration within the PDO-2 North Campus overlay district is subject to urban design review and, prior to commencement of the development, redevelopment, expansion, free standing signage, or exterior alteration, must be approved by the Director in accordance with this section.

8. Design Review Process

(1) The Director shall make decisions on urban design review applications.
(2) The Standing Policy Committee on Property and Development, Heritage and Downtown Development may approve urban design guidelines, standards, or criteria that are generally consistent with the North Campus Secondary Plan and this overlay.
(3) In making decisions on urban design review applications, the Director must consider the requirements in this section and applicable standards in this overlay, in addition to any urban design guidelines, standards or criteria approved by the Standing Policy Committee on Property and Development, Heritage and Downtown Development.

Area 1

9. PDO-2 North Campus Area 1 (consisting of Areas 1A and 1B)

Applicability

(1) PDO-2 North Campus Areas 1A and 1B are shown on Map 1 as Area 1A and Area 1B respectively.

Intent

(2) In accordance with the North Campus Lands Secondary Plan, to accommodate:
  (a) A high density district with a compact development form and taller buildings that are designed with consideration for site conditions and the surrounding context;
  (b) A variety of parks, pathways, and public spaces that support year-round activities;
  (c) A mixture of residential, commercial, institutional, recreational, and cultural uses; and,
  (d) A pedestrian friendly public realm with minimal setbacks and activated street edges.

Prohibited Use Regulations

(3) Notwithstanding other provisions of this By-law, in PDO-2 North Campus Area 1, the following uses shall be prohibited and not allowed as principal, conditional, accessory, or temporary uses:

  (a) Dwelling, single-family detached
  (b) Dwelling, two-family

Permitted Use Regulations

(4) Notwithstanding other provisions of this By-law, in PDO-2 North Campus Area 1, the following principal uses shall be permitted in addition to the permitted and conditional uses of the underlying RMU zoning district:
   (a) Amusement enterprise, indoor
   (b) Auditorium / concert hall / theatre / cinema
   (c) College or university
   (d) Cultural centre
   (e) Dormitory
   (f) Drinking establishment
   (g) Hotel or motel
   (h) Private club, not licensed
   (i) Supermarket
   (j) Transit station

Conditional Use Regulations

(5) Notwithstanding other provisions of this By-law, in PDO-2 North Campus Area 1, the following principal uses shall be conditional in addition to the permitted and conditional uses of the underlying RMU zoning district:
   (a) Amusement enterprise, outdoor
   (b) Craft brewery, distillery or winery
   (c) Parking, structured
   (d) Research institution
   (e) Studio, radio / tv / motion picture broadcast and production

Accessory Use Regulations

(6) Notwithstanding other provisions of this By-law, in PDO-2 North Campus Area 1, the following accessory uses shall be permitted in addition to the permitted and conditional uses of the underlying RMU zoning district:
   (a) Hall rental
   (b) Micro brewery / distillery / winery
   (c) Outdoor dining / drinking area
   (d) Parking, shared
   (e) Social service facility

Use Specific Standards

(7) Regardless of whether a use is allowed as a permitted or conditional use in PDO-2 North Campus Area 1, the following additional standards must be met in respect of the uses identified, except as authorized by other sections of this By-law or by a conditional use or variance order:
   (a) Drinking establishment:
      (i) Drinking establishments are limited to a maximum of 5,000 square feet of gross floor area.
   (b) Medical / dental / optical / counselling clinic:
      (i) Medical / dental / optical / counselling clinics shall not be subject to a maximum gross floor area requirement.
   (c) Museum:
      (i) Museums shall not be subject to a maximum gross floor area requirement.
   (d) Office:
      (i) Offices shall not be subject to a maximum gross floor area requirement.

   (e) Personal services:

(i) Personal services are limited to a maximum of 25,000 square feet of gross floor area; and,
(ii) Personal services shall not be subject to limited hours of operation by this By-law.

(f) Post office / carrier depot:
(i) Post office / carrier depots are limited to a maximum of 1,500 square feet of gross floor area.

(g) Restaurants:
(i) Restaurants are not subject to a maximum gross floor area requirement; and,
(ii) Restaurants shall not be permitted to have a drive-in or drive-through facility.

(h) Retail sales:
(i) Retail sales are limited to a maximum of 40,000 square feet of gross floor area; and,
(ii) Retail sales shall not be subject to limited hours of operation by this By-law.

(i) Supermarket:
(i) Supermarkets are limited to a maximum of 55,000 square feet of gross floor area.

Dimensional Standards

(8) Notwithstanding other provisions of this By-law, in PDO-2 North Campus Area 1, development must comply with the dimensional standards listed in this subsection.

(a) Height of Buildings:
(i) In Area 1 the minimum height of a principal building is 35 feet;
(ii) In Area 1A the maximum height of a principal building is 250 feet; and,
(iii) In Area 1B the maximum height of a principal building is 92 feet.

(b) Yard Requirements:
(i) In Area 1 the minimum front yard is 0 feet;
(ii) The maximum front yard is 10 feet;
(iii) The minimum interior side yard is 0 feet;
(iv) The minimum corner side yard is 0 feet;
(v) The maximum corner side yard is 10 feet; and,
(vi) The minimum rear yard is 20 feet.

(c) Development Density:
(i) In Area 1A the minimum lot area per dwelling unit is 200 square feet; and,
(ii) In Area 1B the minimum lot area per dwelling unit is 300 square feet.

(d) Additional Standards:
(i) Notwithstanding clauses (ii) and (v) under subsection (8)(b) above, up to 50% of the length of the ground floor façade of any building, up to a maximum continuous length of 25 feet, may have a maximum front yard or corner side yard of 20 feet for the purpose of accommodating an otherwise approved public space, plaza, outdoor dining / drinking area, or other pedestrian amenity.
(ii) Notwithstanding clause (iii) under subsection (8)(b) above, for all principal buildings that feature a residential use and are not greater than 50 feet in height, an interior side yard of 10 feet must be provided for the portion of the building containing such uses. For all principal buildings containing a residential use above 50 feet in height, an interior side yard of 20 feet must be provided for the portion of the building containing such uses. These minimum side yards must also be provided when a building containing non-residential uses is proposed on a lot abutting an existing or proposed residential use.
(iii) Notwithstanding other provisions of this By-law, for principal buildings located on the same site, no minimum principal building separation is required when no windows, doors, or other openings are provided in the wall facing the adjacent property, and no such openings are provided in the abutting property wall.

Design Standards

(9) Notwithstanding other provisions of this By-law, in PDO-2 North Campus Area 1, development must comply with the design standards established in this section.
  (a) Building form:
    (i) All buildings shall be stepped back above the fourth storey a minimum of 10 feet, as shown in Illustration 1 below, from the portion or portions of the building fronting a public right-of-way, park, plaza, and/or public open space unless, as determined by the Director, a sufficient alternative design approach is used to mitigate potential negative impacts imposed by the building on such areas.

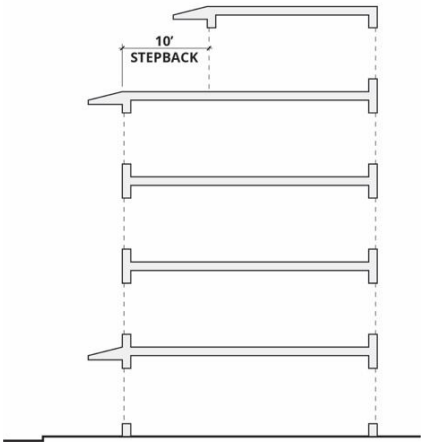

Illustration 1: Fourth Storey Stepback

    (ii) For a proposed building exceeding 100 feet in height, the proponent shall be required to provide a sun/shadow and wind study submitted with the seal of a certified and qualified professional as part of their application for plan approval, which must illustrate and evaluate the potential impact of the proposed building on any affected public right-of-way, park, plaza, and/or public open space.
    (iii) Further to clause (i) and clause (ii) of this subsection, based on the findings of a sun/shadow and wind study, proposed buildings exceeding 100 feet in height may be required to include additional step backs and/or design modifications to mitigate potential impacts on a public right-of-way, park, plaza, and/or public open space, as determined by the Director.
  (b) Building facades:
    (i) For non-residential uses, at least 30% of the ground floor façade of a building facing a street must consist of unobscured windows, doors, or display areas.
  (c) Building entrances:
    (i) All buildings must provide a main entrance on the façade of the building nearest to and facing a street with a direct pedestrian connection.

Signage

(10) Notwithstanding other provisions of this By-law, in PDO-2 North Campus Area 1, development must comply with the signage standards established in this subsection.
  (a) Freestanding signs shall not exceed 6 feet in height.
  (b) The total surface area of signs attached to a building shall not exceed 25% of the applicable building wall.

Area 2

10. PDO-2 North Campus Area 2

Applicability

(1) PDO-2 North Campus Area 2 is shown on Map 1 as Area 2.

Intent

(2) In accordance with the North Campus Lands Secondary Plan, to accommodate:
   (a) A medium density district that is predominantly residential in character and provides a transition between Area 1 lands to the south and Area 3 lands to the north;
   (b) A variety of housing types, in addition to limited small-scale commercial, institutional, and service based uses that support campus activities and community needs; and,
   (c) A variety of parks, pathways, and public spaces that support year-round activities.

Prohibited Use Regulations

(3) Notwithstanding other provisions of this By-law, in Area 2 of the PDO-2 North Campus overlay district, the following uses shall be prohibited and not allowed as principal, conditional, accessory, or temporary uses:

   (a) Dwelling, single-family detached
   (b) Dwelling, two-family

Permitted Use Regulations

(4) Notwithstanding other provisions of this By-law, in Area 2 of the PDO-2 North Campus overlay district, the following principal uses shall be permitted in addition to the permitted and conditional uses of the underlying RMU zoning district:
   (a) Cultural Centre
   (b) Dormitory

Conditional Use Regulations

(5) Notwithstanding other provisions of this By-law, in Area 2 of the PDO-2 North Campus overlay district, the following principal uses shall be conditional in addition to the permitted and conditional uses of the underlying RMU zoning district:
   (a) Amusement enterprise, indoor
   (b) Hostel
   (c) Post office / carrier depot
   (d) Private club, not licensed
   (e) Social service facility

Accessory Use Regulations

(6) Notwithstanding other provisions of this By-law, in Area 1 of the PDO-2 North Campus overlay district, the following accessory uses shall be permitted in addition to the permitted and conditional uses of the underlying RMU zoning district:
   (a) Parking, shared

Use Specific Standards

(7) Regardless of whether a use is allowed as a permitted or conditional use in PDO-2 North Campus Area 2, the following additional standards must be met in respect of the uses identified, except as authorized by other sections of this By-law or by a conditional use or variance order:
   (a) Amusement enterprise, indoor:

(i) Indoor amusement enterprises are limited to a maximum of 10,000 square feet of gross floor area.

(b) Drinking establishment:

(i) Drinking establishments are limited to a maximum of 2,500 square feet of gross floor area.

(c) Outdoor dining / drinking area:

(i) Outdoor dining and drinking areas are limited to 1,000 square feet when located between the front façade of the building and the front property line, but when located elsewhere, are limited to 100 square feet.

Dimensional Standards

(8) Notwithstanding other provisions of this By-law, in PDO-2 North Campus Area 2, development must comply with the dimensional standards listed in this subsection.

(a) Height of Buildings:

(i) In Area 2 the maximum height of a principal building is 92 feet.

(b) Yard Requirements:

(i) In Area 2 the minimum front yard is 0 feet;

(ii) The maximum front yard is 20 feet;

(iii) The minimum corner side yard is 0 feet; and,

(iv) The maximum corner side yard is 20 feet.

(c) Development Density:

(i) In Area 2 the minimum lot area per dwelling unit is 400 square feet.

Design Standards

(9) Notwithstanding other provisions of this By-law, in PDO-2 North Campus Area 2, development must comply with the design standards established in this subsection.

(a) Building form:

(i) All buildings shall be stepped back above the third storey a minimum of 10 feet, as shown in Illustration 2 below, from the portion or portions of the building fronting a public right-of-way, park, plaza, and/or public open space unless, as determined by the Director, a sufficient alternative design approach is used to mitigate potential negative impacts imposed by the building on such areas.

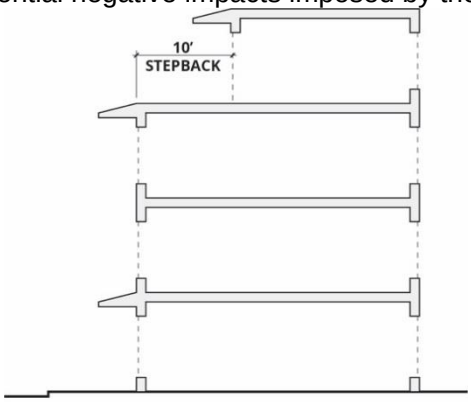

Illustration 2: Third Storey Stepback

Signage

(10) Notwithstanding other provisions of this By-law, in PDO-2 North Campus Area 2, development must comply with the signage standards established in this subsection.

(a) Freestanding signs shall not exceed 6 feet in height.

Area 3

11. PDO-2 North Campus Area 3

Applicability

(1) PDO-2 North Campus Area 3 is shown on Map 1 as Area 3.

Intent

(2) In accordance with the North Campus Lands Secondary Plan, to accommodate:
   (a) A lower density district that is predominantly residential in character and provides a transition between Area 2 lands to the south and existing residential to the north;
   (b) A range of housing types in the form of multi-unit, low rise developments, in addition to community and recreational uses to support the everyday needs of residents; and,
   (c) A variety of parks, pathways, and public spaces that support year-round activities.

Prohibited Use Regulations

(3) Notwithstanding other provisions of this By-law, in Area 3 of the PDO-2 North Campus overlay district, the following uses shall be prohibited and not allowed as principal, conditional, accessory, or temporary uses:

   (a) Dwelling, single-family detached
   (b) Dwelling, two-family

Accessory Use Regulations

(4) Notwithstanding other provisions of this By-law, in Area 3 of the PDO-2 North Campus overlay district, the following accessory uses shall be permitted in addition to the permitted and conditional uses of the underlying RMF-S zoning district:
   (a) Parking, shared

Dimensional Standards

(5) Notwithstanding other provisions of this By-law, in PDO-2 North Campus Area 3, development must comply with the dimensional standards listed in this subsection.
   (a) Building Heights:
      (i) In Area 3 the maximum height of a principal building is 49 feet.

Design Standards

(6) Notwithstanding other provisions of this By-law, in PDO-2 North Campus Area 3, development must comply with the design standards established in this subsection.
   (a) Building form:
      (i) When abutting a property that features an existing single-unit dwelling, all buildings shall be limited to a maximum height of 35 feet, or must fall within a 45 degree angular plane from the shared lot line of the applicable property.

Signage

(7) Notwithstanding other provisions of this By-law, in PDO-2 North Campus Area 3, development must comply with the signage standards established in this subsection, measured from a starting point of 6 feet above grade.
   (a) Freestanding signs shall not exceed 6 feet in height.

APPENDIX "C"

North Campus Lands Secondary Plan
Relevant Policies

3.1. Mixed-Use Campus

- *In general, the intent of this Policy Area is to concentrate higher densities in a pedestrian-friendly urban environment in close proximity to public transit, the existing Fort Garry Campus, and Sport & Active Living facilities.*
- *This Policy Area will encourage larger and taller buildings, including high-rise towers above human-scaled podiums to create a positive relationship with the street. This Policy Area provides a substantial portion of the institutional uses and residential density for North Campus, helping to animate the community and create a critical population mass to support local businesses, campus activities, and public transit. In terms of land use, this Policy Area will accommodate a wide range of multi-family residential units in addition to a range of commercial, cultural, and institutional uses that are incidental to University of Manitoba operations such as education and research facilities.*
- *In addition to the General Mixed-Use Campus Policies, this Policy Area will promote two important Character Areas, each with additional policies to further define their intended form and function:*
    - *The Sifton Central Corridor – extending along Sifton Road, is envisioned as an activated commercial main street in the heart of North Campus.*
    - *The Sydney Smith Junction – situated along Sydney Smith Street between Markham Road and Sifton Road, will establish a unique destination within the Plan Area by leveraging key cultural elements from its adjacency to the Red River and direct connection to the existing campus.*

3.1.2 General Mixed-Use Campus Policies

(1) Land in the Mixed-Use Campus Policy Area shall be rezoned to an appropriate zoning district that supports a range of uses in accordance with Objectives 3.1.1, including:

a. Multi-family residential uses;

b. Institutional and educational uses;

c. Cultural, recreational, and entertainment uses; and,

d. A diverse range of commercial uses including retail, office, hotels, restaurants, and personal services.

(2) Mixed-use buildings are encouraged, but buildings may have up to 100% of any use in appropriate locations.

(3) Retail uses varying in size and frontage should be located at-grade, but tenants that typically occupy a large amount of space may use floors above grade for additional retail or administrative functions.

(4) Buildings heights should generally comply with the ranges shown in Policy Map 2. In particular, taller buildings should be located at prominent intersections and along the north side of the BRT corridor. The placement and design of high-rise buildings should be complimentary to the adjacent lower-density buildings and surrounding public spaces.

(5) *Mid-rise buildings should be encouraged on the south side of streets and mid-block between high-rise structures to maximize sun penetration within the public realm, reduce wind tunnels, and enhance overall pedestrian comfort.*

(6) *Buildings taller than four storeys should be subject to a front-yard step-back above the forth storey to provide a "human scale" relationship to the public realm and to mitigate wind impacts.*

(7) *As a primary entryway to North Campus, the design of the area around the Pembina Highway intersection should reflect the prominence of this Gateway while mitigating the negative impacts of busy and high speed highway traffic.*

(8) *Parking and servicing areas in the Mixed-Use Campus Policy Area, including within the Sifton Central Corridor and Sidney Smith Junction sub-areas, shall be provided in accordance with Section 4.1.5.*

(9) *The Future Rapid Transit Stations shown on Policy Map 1 are conceptual. Winnipeg Transit and the developer should work collaboratively on determining the location and design of those Stations to ensure integration with the overall Plan and achievement of shared transit-oriented development objectives.*

3.1.3 Sifton Central Corridor Policies

(1) *Buildings fronting Sifton Road should include retail and service commercial uses at grade such as retail, grocers, restaurants, cafes, and other community amenities, such as banks, pharmacies, galleries, fitness facilities, with transparent frontages that address and activate the street.*

(2) *Commercial frontages at grade should be built to the lot line and should contain a variety of unit widths including narrow units to accommodate smaller local businesses.*

(3) *Non-active commercial uses such as professional services and administration should be located above the ground floor.*

(4) *Buildings should include some residential uses to provide a critical mass of population in order to animate the street throughout the day.*

(5) *Residential uses should typically be located above the main level. Any ancillary residential uses at grade, such as residential lobbies, shall incorporate design strategies to create an engaging ground floor.*

(6) *While prominent corners are encouraged to feature high-rise buildings, the adjacent properties should transition to a lower height range toward mid-block.*

3.1.4 Sidney Smith Junction Policies

(1) The Sidney Smith Junction should encourage inclusion of cultural uses such as museums, art galleries, and theatres, with a focus on Indigenous culture and design.

(2) Development of the Sidney Smith Junction should include the creation of a destination marketplace serving the immediate and adjacent communities, offering a mix of the best-in-local merchants and products to help build upon the unique strengths of the village.

(3) Design strategies and initiatives to calm traffic and prioritize pedestrians should be considered, including curbless (woonerf-style) street design, textured pavers, bollards, and reduced speed limits.

(4) Tall buildings at key corners will include podiums to preserve the pedestrian scale and mitigate wind impacts, while encouraging higher densities characteristic of urban village environments

(5) Opportunities for public art and interactive public spaces on the adjacent river front property in particular, will be encouraged in accordance with Objective 3.4.1(5).

Mixed-Use Village

- *The Mixed-Use Village Policy Area will accommodate primarily mid-rise residential development types with a wide range of dwelling unit sizes and tenures. Institutional and commercial may also be accommodated at grade where appropriate. However, this Policy Area will be predominantly of residential character, with some small-scale local commercial permitted at grade. The intent of the area is to contribute to the variety of building scales featured throughout North Campus, while transitioning from higher-densities and building heights adjacent to areas designated Mixed-Use Campus down to lower-densities and building heights adjacent to the Neighbourhood Policy Area and existing low-rise residential areas.*

3.2.2 Policies

(1) Land in the Mixed-Use Village Policy Area shall be rezoned to an appropriate zoning district that supports a range of uses in accordance with Objectives 3.2.1, including:

i. a diverse mix of multi-family residential developments of all types, tenures, integrating accessible and age-friendly housing, and providing housing options for a range of household income levels;

ii. live-work units that integrate small-scale commercial and retail uses at-grade; and,

iii. other limited commercial and institutional uses at-grade for the purposes of meeting local neighbourhood needs.

(2) Buildings in this Land Use Policy Area should generally follow the ranges shown in Policy Map 2. Specifically, buildings should transition from taller heights on sites adjacent to higher density areas down to lower buildings adjacent to lower density areas.

(3) Lower density typologies including low-rise apartments and townhouses may be considered as a transition to existing residential areas and the Neighbourhood Policy Area.

(4) Residential at-grade units should have direct access to the sidewalk with appropriate privacy measures such as porches, setbacks and landscaping.

(5) Non-residential uses in this designation should primarily be limited to the first storey.

(6) Commercial uses at grade in this designation should contain active uses only that are limited in size and designed with transparent frontages that are built to the lot line.

(7) Institutional, community, and recreational uses including schools and similar uses may be supported within the Mixed-Use Village Policy Area where it is determined to be compatible with adjacent uses.

(8) Building storeys above a three-storey podium should be stepped back from the lot line to provide a "human scale" relationship to the public realm.

(9) Seniors housing including varying levels of home care should be encouraged to allow seniors to age-in-place in the community.

(10) Parking and servicing areas in the Mixed-Use Village Policy Area shall be provided in accordance with Section 4.1.5.

Neighbourhood

- *This land use designation defines the most northerly end of the Plan Area towards the existing low-density residential community on Thatcher Drive. Generally, residential building types in North Campus are intended to transition from mid-rise apartment buildings in the Mixed-Use Village Policy Area down to lower density, low-rise ground-entry housing forms in the Neighbourhood Policy Area. At the south end of the Neighbourhood area will be integrated stormwater facilities and park space that will provide recreational opportunities, natural amenities, and functional land drainage infrastructure. The Neighbourhood Policy Area also features a prominent gateway to the North Campus, located at the northern boundary of the Plan Area on University Crescent, which provides an opportunity for attractive placemaking features.*

3.3.2 Policies

(1) Land in the Neighbourhood Policy Area shall be rezoned to an appropriate zoning district that supports a range of uses in accordance with Objectives 3.3.1, including townhouses and rowhouses.

(2) Low-rise apartment buildings may be supported in appropriate locations such as corner sites and adjacent to park space.

(3) Community and recreational uses such as schools and public playgrounds that are complementary to the neighbourhood should be encouraged while other institutional and commercial uses should be directed to the Mixed-Use Village or Campus Policy Areas.

(4) Home-based businesses may be permitted and will be evaluated on a case-by-case basis for compatibility with adjacent uses.

(5) Parking and servicing areas for the Neighbourhood Policy Area shall be provided in accordance with Section 4.1.5.

(6) Single Family Detached dwellings will not be permitted in the Neighbourhood Policy Area.

(7) Residential buildings should contain three (3) or more dwelling units.

(8) All private vehicular access to individual units shall be interior to the development.

Major Parks

- *A connected network of parks and other open spaces is a critical feature of the vision for the North Campus. As identified on the Land Use Plan (Policy Map 1), two open space areas are designated as Major Parks: The Riverside Park along the Red River; and, the Linear Neighbourhood Park along the planned stormwater management pond(s) to the south of the Neighbourhood Policy Area.*
- *With the North Campus Lands expected to remain privately owned, the policies of this section outline the provisioning expectations in accordance with the City of Winnipeg Development Agreement Parameters.*
- *In addition to the Major Parks identified on the Land Use Plan, North Campus will contain numerous other open space areas, including: smaller pocket parks, urban plazas, and courtyards that are connected throughout the Plan Area by a pedestrian and cycling network for the enjoyment of residents, students, employees, and visitors.*
- *The location and design of all parks and public spaces will be determined, and reviewed for conformity with the following objectives and policies, as part of future Block Plans (see Section 5.3)*

3.4.2 General Open Space, Parks, and Public Realm Policies

(1) *Land for Major Parks shall be allocated in a manner consistent with the Development Agreement Parameters and The Charter;*

(2) *In addition to lands allocated for parks per Section 3.4.2 (1), development sites should contribute to the overall public space network by creating smaller pocket parks and publicly accessible urban plazas and courtyards throughout the development.*

(3) *Parks and open spaces should be designed to be beautiful, functional, and sustainable.*

(4) *Parks and open spaces should be designed as flexible spaces in order to accommodate a variety of active and passive recreation activities, programming, and events to cater to changing community needs over time.*

(5) *Parks and open spaces should be designed for use during all seasons, with shelter from winds, places to enjoy sun exposure, and lighting for safe evening use.*

(6) *Parks and open spaces, and the public realm in general, should be designed for universal accessibility.*

(7) *Parks and open spaces should be designed to incorporate and preserve aspects of the cultural heritage landscape character such as the existing forested stands of healthy and mature trees.*

(8) *All parks and open spaces within the North Campus should implement Low Impact Development strategies, emphasizing conservation and use of on-site natural features to filter, store, and detain runoff water.*

(9) *Parks and open spaces shall incorporate pathways which will work in a cohesive manner as part of the pedestrian and cycling network.*

(10) *Opportunities for public art that maximize public interaction should be considered throughout parks and open spaces, and the public realm in general.*

(11) *Parks and open spaces along linear waterways shall generally run along at least one side and shall incorporate pathways which will work in a cohesive manner as part of the pedestrian and cycling network.*

3.4.3 Riverside Park Policies

(1) *The Riverside Park should be developed to provide connections and access to the river's edge.*

(2) *Opportunities for trails and pathways should be integrated in the design of the open space to allow for controlled exploration and engagement of the riverside including, where possible, the extension of the South Winnipeg Parkway from Darcy through the Campus.*

(3) *Outlooks and seasonal docks should be considered, where appropriate and feasible, to allow for enhanced access and connections to the river.*

(4) *Existing vegetation should be conserved and enhanced to provide a continuous habitat along the river's edge.*

(5) *Native vegetation should be used to naturalize areas in order to maintain the quality and integrity of the landscape typology, and to maintain an identity relating the site to its regional context.*

(6) *Public art should be considered as part of the landscape and as an opportunity to tell the Indigenous and cultural heritage landscape story.*

3.4.4 Urban Plazas and Courtyards Policies

(1) Urban plazas and courtyard spaces should be incorporated as an integral part of new developments to provide publicly-accessible amenity space and to improve exposure to natural daylight. Urban Plazas and Courtyards are intended as informal pedestrian spaces, in support of adjacent higher density development.

(2) Plazas and courtyards should be designed as welcoming, attractive, and comfortable places for people to interact with each other and the environment.

(3) Opportunities to physically and visually connect the private plaza and courtyard spaces with the public realm should be encouraged.

(4) Plazas and courtyards shall be designed to be flexible, to accommodate seating, spontaneous activity, events, passive recreation and play.

(5) Plazas and courtyards should be designed for use during all seasons, with shelter from winds, and open areas to allow for sun exposure.

3.4.5 Streetscape Policies

(1) Street trees should be integrated as primary defining components of all streetscape typologies to create a prolific urban tree canopy throughout North Campus;

(2) A variety of plantings other than trees such as low shrubs, ornamental grasses, and hardy perennials in at-grade planters should be included in the streetscape design for seasonal streetscape beautification and to increase the permeability of the streetscape

(3) A matrix of street furnishings such as benches and lighting fixtures should be installed to support the public use and enjoyment of streets while creating a consistent identity to the streetscape.

(4) Consideration should be given to implementing best practice sustainable features and materials such as integrating "green (plant) and blue (water)" infrastructure into streetscape designs.

Exhibit “10” referred to in File DASZ 15/2022

MAP 1: NORTH CAMPUS OVERLAY MAP

