Health Canada Santé Canada

Your health and safety… our priority. *Votre santé et votre sécurité… notre priorité.*

Technical Guide for Interpretation and Compliance Assessment of Health Canada's Radiofrequency Exposure Guidelines

Consumer and Clinical Radiation Protection Bureau
Environmental Radiation and Health Sciences Directorate
Healthy Environments and Consumer Safety Branch
Health Canada

Canada

Table of Contents **Page**

1. Introduction 4

2. Uncontrolled and Controlled Environments 4
2.1 Basic Considerations 4
2.2 Protection of Persons in Controlled Environments 5
2.2.1 Special Circumstances 6

3. Safety Signs for RF Protection 7
3.1 Areas 7
3.2 Devices 7

4. RF Surveys and Exposure Evaluation 7
4.1 Surveys 8
4.2 Measurements and Evaluation 8
4.2.1 Basic Characteristics of Survey Meters 9
4.2.2 Exposure Assessment Determined by Type of Reference Level (NS- vs SAR-based) 10
4.2.3 Six-minute Time Averaging 13
4.2.4 Exposure Assessment of Multiple Sources 14
4.2.5 Spatial Averaging 18
4.3 Specific Absorption Rate (SAR) 21
4.4 Contact and Induced Currents 22
4.4.1 Contact Current 22
4.4.2 Induced Current 24
4.5 Records and Recommendations 24
5. Theoretical Estimation of Exposure Fields 25
5.1 Near-field and Far-field Zones 25
5.1.1 Large Antennas 26
5.1.2 Small Antennas 27
5.1.3 Sources Producing Leakage Fields 28
5.2 Formulas for Estimation of field strength and power density 28
5.3 Average Power of Pulsed Waves 29
5.4 Scanning Antennas 32

Definitions 34

References 38

Appendix A Criteria for determining priority of NS- or SAR-based reference levels, 0.1-10 MHz, based on the temporal characteristics of the field-strength waveform 41

Appendix B Examples of Exposure Assessment for Multiple Sources 46

Appendix C Examples of Exposure Assessment Using Computation and an Example of 6-minute Time Averaging 49

Appendix D Spatial Averaging with Multiple Sources 52

1. Introduction

This document contains technical information for guiding individuals or groups in their understanding of Health Canada's radiofrequency (RF) exposure guidelines, commonly known as Safety Code 6 (SC6-2015) [1]. It also provides information that can, where needed, serve to guide measurement surveys and clarify comparisons between measured, calculated or modeled exposure levels and the maximum exposure levels in the Code for controlled and uncontrolled environments. With respect to compliance with applicable legislation, relevant documents from the appropriate regulatory authority take precedence over information presented in this Guide.

2. Uncontrolled and Controlled Environments

Controlled environments are defined as those where all of the following conditions are satisfied:

(a) the RF field intensities in the controlled area have been adequately characterized by means of measurements, calculations or modeling (such as with the use of numerical electromagnetic simulation software),

(b) the exposure is incurred by persons who are aware of the potential for RF exposure and are cognizant of the intensities of the RF fields in their environment and,

(c) the exposure is incurred by persons who are aware of the potential health risks associated with RF field exposures and can control their risk using mitigation strategies.

Situations that do not meet all the specifications above are considered to be uncontrolled environments.

2.1 Basic Considerations

(a) Members of the general public should not be allowed access to controlled environments, where RF exposure levels may exceed the reference levels for uncontrolled environments specified in SC6-2015, Section 2.

(b) Where it is possible to access the controlled environments described in 2.1 (a), demarcation signs should be posted to indicate the presence of RF emissions (See Section 3). These signs should be clearly visible and identifiable: (i) at all viewing distances and angles, (ii) where exposures above the uncontrolled environment limits could occur and (iii) at the entrances to the controlled environment.

(c) Any device capable of producing leakage that would result in levels close to the limits specified for the uncontrolled environment in SC6-2015, Section 2, and to which unrestricted public access is allowed, should be checked for conformity

with existing applicable regulations after installation, malfunction, modification or repair.

2.2 Protection of Persons in Controlled Environments

(a) RF exposure levels should be well characterized, whether by measurements, calculations or modeling, in controlled environments where restrictions on occupancy are in place.

(b) RF exposure levels, including induced and contact currents, should not exceed the limits for controlled environments specified in Section 2 of SC6-2015, except under special circumstances (See Section 2.3).

(c) Demarcation signs indicating the presence of RF fields, should be posted according to the recommendations outlined in Section 3.

(d) Unauthorized access to the controlled environment in areas surrounding unmanned, high-power sources of RF energy should be prevented by means of a physical barrier. If a metallic fence is used, the contact current limits for the uncontrolled environment, specified in SC6-2015, Section 2, should be respected.

(e) The siting of RF devices should take into account the possibility that multiple source exposures from RF fields and leakage from other devices in the vicinity may result in RF exposure levels that exceed the exposure limits outlined in SC6-2015, Section 2.

(f) Unnecessary metallic objects should not be located near any radiating RF device, as they may cause high intensity RF fields in some locations.

(g) Maintenance personnel and operators of RF devices should be aware of the potential hazards of RF fields.

(h) Before an RF device is switched on for test or maintenance purposes, particular care should be taken to ensure that all people are clear of areas where fields could be above the controlled environment limits.

(i) Instructions and procedures for repair, maintenance and operation of a device, as specified by the manufacturer or a competent person, should be readily available to, and be followed by, operators and maintenance personnel.

(j) Testing of a device either before or after completion of any repair work should be carried out after protective shields, waveguides and other components have been placed in their designated locations.

(k) The correct operation of electronic test equipment and power meters should be

checked in advance, i.e., prior to using them at the repair station or test site.

(l) Adjustment of voltages, replacement of RF energy generating components, dismantling components or refitting transmission lines should be undertaken by persons specially trained for such assignments. The services of a qualified repair person should be sought when any malfunction is suspected.

(m) The correct operation of all safety interlocks should be tested and operators should not defeat any safety interlock.

(n) An RF generating component should be tested with an appropriate load connected to its output or with the radiated energy absorbed by anechoic material. The energy generated should not be allowed to radiate freely into occupied areas.

2.2.1 Special Circumstances

If the reference period in Section 2 of SC6-2015 is instantaneous, as for both nerve stimulation (NS)-based reference levels (all applicable frequencies) and for specific absorption rate (SAR)-based contact current reference levels from 100 kHz to 10 MHz, there should be no special circumstances where they can be temporarily exceeded.

In some instances, for operational purposes, it may be necessary for authorized personnel to enter areas where the True RMS exposure levels exceed the controlled environment limit values in Tables 3, 4 and 6 in SC6-2015. In such circumstances, a way to meet the recommendations in the code is to limit the amount of time spent in these conditions as per the following two administrative measures:

(a) the duration of a single brief exposure above the limit levels specified in Tables 3, 4 and 6 in SC6-2015, Section 2.2 is sufficiently short to enable the time-averaged exposure level (where the time averaging is over the 6 minute reference period that includes the single brief exposure) to meet the applicable limit.

(b) the durations of intermittent, elevated exposures throughout the work period above the limit levels specified in Tables 3, 4 and 6 in SC6-2015, Section 2.2 are sufficiently short to enable the time-averaged exposure levels (where the time averaging is over any 6 minute reference period) to meet the applicable limit.

Clauses (a) and (b) are referred to as “administrative controls”, which is distinct from “engineering controls” where control of the time-averaged exposure is based on the characteristics of the amplitude modulation of the source or its duty factor. Please see Notes 1 and 2 of Table 6 in SC6-2015, Section 4.2.3 of this guide and Example C-4 of Appendix C for further details.

3. Safety Signs for RF Protection

3.1 Areas

Signs should be used to label areas where RF exposure levels, including induced and contact currents, may exceed the exposure limits specified in SC6-2015, Section 2. Efforts should be made to use symbols and text that conform to standards for safety signs [2].

(a) ***CAUTION*** signs should be placed at all entrances of any zone within which RF levels exceed the limits for uncontrolled environments, but are below those for controlled environments, specified in SC6-2015, Section 2. The ***CAUTION*** sign should designate the zone as "***OCCUPANCY RESTRICTED TO AUTHORIZED PERSONNEL ONLY"*** (or similar text), indicating that persons (e.g. members of the general public as well as personnel with insufficient knowledge to protect themselves), may not enter the area.

(b) ***WARNING*** signs should be placed at all entrances of any zone within which RF levels exceed the limits for controlled environments specified in SC6-2015, Section 2. The ***WARNING*** sign should designate the zone as ***"OCCUPANCY ONLY UNDER CONTROLLED CONDITIONS***" (or similar text), to indicate the need for engineering and/or administrative controls to be in place to sufficiently mitigate exposure levels for authorized personnel who must enter the area.

3.2 Devices

(a) A ***CAUTION*** sign may be used to identify RF energy emitting devices that can produce exposures that can lead to injury from misuse. Microwave ovens have the ***CAUTION*** sign as part of their labelling requirements in Part III, Schedule II of the Radiation Emitting Devices Regulations of the Radiation Emitting Devices Act [3].

(b) A ***DANGER*** sign may be applied to any device, under development or in use for any industrial, scientific or medical purposes, if it produces exposure levels or contact or induced currents that pose a risk of immediate and severe injury.

4. RF Surveys and Exposure Evaluation

Measurement surveys or mathematical or numerical computations can be used to estimate exposure levels from a single source or multiple sources. The first approach usually involves the use of a calibrated instrument designed to measure one of the reference level quantities directly. The computational approaches make use of either mathematical formulas that model the behaviour of electromagnetic waves using well-defined source parameters (such as frequency, transmit power, antenna gain etc.) or utilize numerical algorithms that model the physical characteristics of the source(s) and sometimes the environment, to predict the reference level quantities of interest.

Quite often, the mathematical or numerical computation approach can give a quick indication of whether or not it is plausible that the reference levels could be exceeded. This approach is useful for deciding whether a measurement survey is required. Section 5 of this guide contains more information on calculations that can be used to predict field strength from sources (antennas) where the radiating parameters are known.

4.1 Surveys

The objective of a survey is to assess the RF exposure levels within controlled and/or uncontrolled areas in the environment surrounding a device or installation that emits RF electric and/or magnetic fields. The following recommendations are made:

(a) RF surveys should only be conducted by qualified individuals, with specific training on RF survey instrumentation and techniques.

(b) If mathematical or numerical computations suggest the need for an RF survey, one should be conducted for all new RF emitting installations/devices and following any repairs, malfunctions, increases in radiated power or changes in working conditions (such as protective shielding and/or barriers) to existing ones, that could potentially produce RF field strength, induced body currents and/or contact currents in excess of the limits set out in SC6-2015, Section 2.2.

(c) Survey instruments should be selected to match the RF source and exposure conditions, taking into account such parameters as frequency, level of field strength (or power density) and near or far-field. Survey instruments should be fully calibrated periodically and if possible, their performance should be checked against another calibrated instrument before carrying out a survey.

(d) During the inspection of any RF device or installation, all safety interlocks and "ON-OFF" control switches should be examined and placed in working order. Safety signs, labels and tags should be affixed and be easily readable.

(e) Efforts should be made to assess the uncertainty of the measurements using standardized methods. Detailed information on estimating uncertainties can be found in JCGM 100: 2008 [4] and with specific reference to RF field measurements, the standards AS/NZS 2772.2 [5] and IEC 62232 [6]. All uncertainty estimates should be reported in the survey record. If detailed uncertainty estimates are not feasible, then at the very least, the instrument uncertainties as stated on the calibration certificate should be reported.

4.2 Measurements and Evaluation

The area surrounding any RF source is generally divided into two regions: the near-field and the far-field zones (more details on these concepts can be found in

Section 5 of this guide). In many RF surveys, the exposure levels need to be determined in the near-field zone of the source. In some instances, the environment consists of RF fields from several sources and difficulties can be encountered in determining the total field strengths (or power density) of such fields. Also, special care should be devoted to the selection of appropriate survey instruments to ensure that they are designed for operation in the frequency ranges required.

4.2.1 Basic Characteristics of Survey Meters

When surveying fields in the near-field zone of an antenna or in close proximity to a device, both electric field and magnetic field strengths should be measured, when possible. However, instrumentation for the measurement of magnetic fields at certain frequencies may not be commercially available. In this case, the electric field strength should be measured. In the far-field zone, it is sufficient to measure any of the following parameters: electric field strength, magnetic field strength or power density. Many meters have indicators that are calibrated in power density units (e.g., mW/cm^2), but the quantity actually measured may be the square of the strength of the electric or magnetic field. It must be remembered that power density measurements in the near-field zone are not meaningful for the evaluation of exposure levels. The information about the measured field parameter is normally provided in the instruction manual.

If the frequency range covered by one survey instrument is narrower than the frequency range of the fields generated by the RF sources in the vicinity of the site surveyed, multiple instruments may be required to determine the fields in the whole range of frequencies.

Since, typically, the orientation(s) of the electromagnetic field vector are not known, a survey meter having an isotropic detecting element is preferred. If the only meter available is one having a single-axis detecting element, measurements of the total field can be performed by employing three mutually perpendicular orientations of the detecting element, one after the other, and calculating the resultant field from the following equations:

$$E = \sqrt{E_x^2 + E_y^2 + E_z^2} \qquad (4-1)$$

$$H = \sqrt{H_x^2 + H_y^2 + H_z^2} \qquad (4-2)$$

$$S = S_x + S_y + S_z \qquad (4-3)$$

where the subscripts x, y and z refer to measurements in the three mutually orthogonal orientations and E, H and S represent the resultant electric field strength (in V/m), magnetic field strength (in A/m) and power density (in W/m^2), respectively.

When performing survey measurements in the near-field of an RF source, a meter suitable for operation in the near-field should be used. Special care is required to avoid perturbing the field by the instrument (e.g. the meter casing, but not the field probe), or by other objects or people in the vicinity.

When amplitude or frequency modulated fields and especially pulsed fields are surveyed, the meter response to such fields should be evaluated to determine if it is capable of measuring these types of fields.

Exposure levels in the vicinity of RF sources having scanning (rotating) antennas may have to be determined with the antenna stationary, because of limitations of the available measuring instruments. The exposure conditions, when the antenna is in motion, are then evaluated using methods described in Section 5.3.

4.2.2 Exposure Assessment Determined by Type of Reference Level (NS- vs SAR-based)

Most RF fields encountered in practice have some type of modulation that may take the form of amplitude, frequency and/or phase variations of the RF carrier. Even two continuous wave (CW) field strengths of similar intensity, when combined, will give rise to amplitude fluctuations. This guide is concerned only with variations or modulation of the amplitude of the carrier(s) since this affects the net RF energy absorption and potential for nerve stimulation.

The following discussion (see also the Definitions section) concerns the terminology used in the Guide to describe the characteristics of a single waveform or combinations of field strength waveforms (or carrier waves) with amplitude variation. (For better readability, the text in this section only uses the terms field strength and power density. However, the user is advised that all discussion related to the field strength also applies to the induced and contact currents.) The term “instantaneous RMS” denotes the square root of the average of the square of the field strength waveform when averaged over a single cycle of the carrier. The instantaneous RMS value of a modulated waveform, when plotted over time traces out the RMS “envelope”. The temporal maximum of the RMS envelope of the field strength waveform will be defined as the “Maximum RMS” of the field strength waveform.

The rate of energy absorption by a person is related to the temporally-averaged, square of the field strength waveform, when averaged over a sufficiently long period (i.e. long enough to yield an unchanging value as the averaging time is

incrementally increased). At the higher frequencies where the concept of power density is applicable, the rate of energy absorption is also related to the temporally-averaged power density. When referring to field strength, the term "True RMS" will be used to denote the square root of the temporally-averaged, square of the field strength while the term "time-averaged power density" will be used to denote the temporally averaged power density. It is assumed in both cases that averaging is carried out long enough to yield an unchanging value as the averaging time is incrementally increased. (Note: some manufacturers of field strength measuring equipment use the term "Average RMS" in place of True RMS to denote the long-term average RMS value. See also the Definition Section.)

To obtain the True RMS, the required length of the averaging period depends on the characteristics of the signal. For periodically modulated signals, the averaging period only needs to be equal to the period of the modulation. For highly intermittent or slowly varying modulations, the averaging period may need to be of the order of minutes. For some forms of pulsed or digital modulation or in the case of the superposition of two or more carriers within the bandwidth of the measuring instrument, the envelope may appear to be random. In these cases, the application of statistically derived duty factors or average-to-peak ratios may be the most effective way to estimate True RMS field strengths or time-averaged power densities.

3 kHz – 10 MHz

Below 10 MHz, SC6-2015 contains two categories of reference levels (RLs) for electric and magnetic field strength in Tables 3 and 4 of Section 2.2, respectively. One set of RLs is based on prevention of nerve stimulation (NS). The code identifies these types of RLs as having an instantaneous reference period. This means that the appropriate parameter of the field strength to be compared to NS-based RLs is the Maximum RMS for amplitude modulated field strengths. In the case of continuous, unmodulated, periodic, non-sinusoidal field waveforms, the recommended procedure is outlined in the section below. It should be emphasized that the RL values from Tables 3 and 4 of SC6-2015 apply to the temporal maximum of the RMS envelope and not to the instantaneous peak of the field strength waveform itself. For example, a continuous wave (CW) field strength signal has a maximum of the RMS envelope that is 0.707 times the signal peak.

The other set of RLs (Tables 3 and 4 of SC6-2015) is based on the prevention of excessive specific absorption rate (SAR) in tissues. The appropriate parameter to be compared to SAR-based field strength RLs is the True RMS of the field strength.

In general, at frequencies where both types of reference levels apply, compliance to both types should be demonstrated simultaneously (this means that a state of compliance to both types of RLs exist concurrently, not that measurements need to

be taken at the same time). This would normally mean that two sets of measurements or field assessments would be undertaken and comparisons to both types of RLs made. However, depending on the ratio of the True RMS to Maximum RMS of the field strength waveform, demonstration of compliance to one type of reference level may automatically guarantee compliance to the other based on the value of the ratio. For instance, pulsed field strength waveforms with low duty factor may exceed the NS-based limits before exceeding the SAR-based ones. In this case, compliance of the Maximum RMS assures compliance of the True RMS field strength. More details on this are given in Appendix A.

The most convenient way to assess modulated field strengths against NS-based RLs is to use an RMS envelope detector and to record the maximum of the envelope signal. Most field strength instruments are calibrated to measure the instantaneous RMS of the carrier and possess some kind of maximum-hold (Max-hold), post-detection circuitry. Max-hold functions on meters typically have a reset button, upon whose activation, causes the meter to reset itself in order to acquire another maximum reading. Selection of the appropriate holding (or searching) time period (period between resets) is important since it should be long enough to capture the highest possible maximum in the envelope signal, yet be short enough so that it does not slow the manual scanning to find the spatial distribution of the fields.

For field strength measurements assessed against a SAR-based RL, the time duration of the averaging process should be chosen such that it is just long enough to yield an accurate estimate of the True RMS of the signal.

It should be noted that in the case of unmodulated sinusoidal field strength waveforms, the Maximum RMS and True RMS are identical.

Assessment of Periodic, Non-sinusoidal Field Waveforms against NS-based Reference Levels:

Examples of periodic, non-sinusoidal waveforms are squarewaves, trapezoidal, triangular or saw-tooth waveforms. Also included are periodically repeating, exponential-rise or -decay field strength waveforms that would result from square wave excitation of an inductive or capacitive load.

The procedure for assessing this type of waveform is to measure or compute the peak-to-peak amplitude of the waveform over its entire period. The “Effective Maximum RMS” value of the waveform, that is to be compared to the NS-based reference level, is equal to the peak-to-peak amplitude of the waveform divided by the factor $2\sqrt{2}$ (which equals 2.83). The value of Effective Maximum RMS of such periodic, non-sinusoidal waveforms is to be treated the same as the Maximum RMS of amplitude-modulated sinusoidal waveforms throughout the remainder of this document.

If the field strength meter presents readings only in terms of True RMS, and the waveform is known to be symmetric about its average value, the peak amplitude can be found by multiplying the True RMS by the crest factor (CF). Crest factor is defined as the ratio of the peak amplitude to the RMS amplitude of a waveform and can be found in engineering handbooks for most standard waveforms. For example, the True RMS value of a symmetric triangular waveform is known to be $1/\sqrt{3}$ times its peak amplitude resulting in a crest factor of $\sqrt{3} = 1.73$. Peak-to-peak values can be obtained by multiplying readings of True RMS by twice the crest factor (e.g. 2 x 1.73).

Alternatively, or for asymmetric waveforms, the peak-to-peak amplitude can be assessed with the aid of an oscilloscope to compute the Effective Maximum RMS.

10 MHz – 300 GHz

From 10 MHz to 6 GHz, all reference levels are based on limiting whole body SAR while for 6-300 GHz, the basic restrictions and reference levels are in terms of power density. All comparisons to the RLs are made either in True RMS field strength or the time-averaged power density. The time duration of the averaging process should be chosen to be just long enough to yield an accurate estimate of the True RMS field strength or time-averaged power density.

Appendix C contains an example of exposure assessment of a pulse modulated field.

4.2.3 Six-minute Time Averaging

The 6 minute reference period is not to be interpreted as the maximum allowable exposure duration (SC6-2015 basic restrictions and reference levels apply to continuous, uninterrupted exposure).

For uncontrolled environments, a person's exposure duration typically cannot be controlled. To meet the exposures limits on a continual basis (24 hours a day/7 days per week**)** the onus is on the control of the RF energy emitting source, to ensure that in any 6-minute time averaging period, the exposure limits will not be exceeded (this is referred to as "engineering controls").

For controlled environments, where the exposure has been well characterized and authorized personnel have sufficient knowledge of RF field emissions, the exposure limits can be met by either controlling the person's exposure duration or as in the uncontrolled environment, controlling the output of the source. In the case of the former, responsibility is shared between the personnel and workplace authorities to limit exposure durations so that the 6 minute time-averaged exposure does not exceed the reference level (this is referred to as "administrative controls").

The SAR and power density–based reference levels (up to 15000 MHz) given in SC6-2015 have an associated reference period of 6 minutes. The correct interpretation of this is that exposures lasting less than 6 minutes may exceed the reference level provided that the averaged exposure over any 6 minute period, does not exceed the reference level. This averaging is carried out by calculating the root mean square for field strength or current and by taking the arithmetic mean for power density. This principle is also applied to exposures at frequencies from 15000 – 300000 MHz, except that there is an ever-decreasing reference period with frequency (see Tables 5 and 6 of SC6-2015 for the formula that is to be used to calculate the reference period).

As an additional consideration for pulsed exposures, the peak limits in SC6-2015 for field strengths, power density and induced and contact currents should also be respected.

An example of the use of 6 minute averaging time is given in Example C-4 of Appendix C.

4.2.4 Exposure Assessment of Multiple Sources

The following section describes procedures to assess RF exposures in complex environments where multiple RF emitting sources at different frequencies are present. The sources may be co-located or spatially distinct from one another and their radiofrequencies are assumed to be non-coherent (i.e. not originating from a common frequency generator).

Determining whether the limits are met can be made by evaluating the exposure fraction (the fraction of the reference level caused by the exposure to the field or current) for each source and ensuring that the combination (henceforth defined as the "Comparison Criterion") is less than or equal to unity. In the following discussion a source is defined to be a unique RF frequency emitted by an apparatus that may or may not be modulated. If modulated, the source also includes both the carrier and the modulation frequency components. In cases where the source is modulated and the relevant limits are frequency dependent, the value of reference level field strength or current to be used is the value corresponding to the carrier frequency. Where the exact frequency of a modulated carrier is not known, the median frequency of the band of frequencies making up the spectrum of the modulated signal can be taken as the source frequency. More than one source may be transmitted from a single physical radiator.

Case 1: SAR and Power Density Based Reference Levels Apply Exclusively

Since SAR is proportional to the square of field strength and current or directly to power density, combining exposure fractions is carried out as a sum of squares for

electric field strength, magnetic field strength or current and as an arithmetic sum for power density.

In order to understand the implementation of the Comparison Criteria, it should be noted how the different SAR-based reference levels were derived. The electric field strength, magnetic field strength and power density reference levels were designed to protect against excessive whole-body-average SAR (WBA-SAR). Alternatively, SAR-based reference levels for induced and contact current were set to protect against excessive peak, 10 g spatially-averaged SAR in the limbs (ankles for induced current and finger or wrist for contact current). Since both WBA-SAR and peak spatially-averaged SAR basic restrictions must be complied with simultaneously, separate Comparison Criteria for field strength (and/or power density) and current (contact and/or induced) exist.

The underlying principle for deriving the field strength (and/or power density) Comparison Criteria is that the overall WBA-SAR is composed of the sum of the WBA-SAR contributions from each source:

$$\left[\sum_{g}^{N}\left(\frac{E_{TRMS,g}}{E_{RL-SAR}}\right)^2+\sum_{i}^{M}\left(\frac{E_{TRMS,i}}{E_{RL-SAR}}\right)^2+\sum_{j}^{P}\left(\frac{H_{TRMS,j}}{H_{RL-SAR}}\right)^2+\sum_{k}^{T}\left(\frac{S_{ave,k}}{S_{RL}}\right)\right]\leq 1 \quad (4-4)$$

$$\left[\sum_{g}^{N}\left(\frac{H_{TRMS,g}}{H_{RL-SAR}}\right)^2+\sum_{i}^{M}\left(\frac{E_{TRMS,i}}{E_{RL-SAR}}\right)^2+\sum_{j}^{P}\left(\frac{H_{TRMS,j}}{H_{RL-SAR}}\right)^2+\sum_{k}^{T}\left(\frac{S_{ave,k}}{S_{RL}}\right)\right]\leq 1 \quad (4-5)$$

where the sources in the set N are those where both the electric (E) and magnetic (H) field strengths have been measured, sources in the set M are those where only E has been measured, sources in the set P are those where only H has been measured and sources in the set T are those where only power density has been measured. The terms E_{TRMS} and H_{TRMS} are the True RMS field strength exposure levels and S_{ave} is the time-averaged power density exposure level. Terms $E_{RL\text{-}SAR}$ and $H_{RL\text{-}SAR}$ are the SAR-based field strength reference levels, and S_{RL} is the reference level for power density.

In both criteria 4-4 and 4-5, a source cannot belong to more than one set. However the sets N, M, P and T in 4-4 are the same as the corresponding sets in 4-5. The two criteria are almost identical except for the summation over sources where both E and H have been measured (set N). This is due to the assumption that for a single source, E and H do not contribute to the WBA-SAR additively (in the far-

field they are interrelated while in the near-field one or the other is usually dominant). If there are no sources for which both E and H have been measured, then criteria 4-4 and 4-5 are identical and only one of them needs to be tested.

Where field strengths are non-uniform and it is necessary to apply spatial averaging, Appendix D outlines the procedures that can be followed.

For multiple sources of induced or contact current, the Comparison Criterion is:

$$\left[\sum_{i}^{Q}\left(\frac{I_{TRMS,i}}{I_{RL-SAR}}\right)^{2}\right] \leq 1 \qquad (4-6)$$

where I_{TRMS} is the True RMS induced or contact current and $I_{RL\text{-}SAR}$ is the induced or contact current reference level based on SAR. The summation is carried out only for those sources where induced or contact current is measured (denoted by set Q).

In cases where assessments of both induced current and contact current are made, separate Comparison Criteria should be satisfied for each type of current. Contributions to the 10 g averaged, spatial peak SAR are not added together for induced (ankles) and contact (finger or wrist) currents since they occur in different locations in the body.

Case 2: NS-based RLs Apply Exclusively

The underlying principle for deriving Comparison Criteria is that the basic restriction quantity for NS, i.e. the spatial-peak of the induced electric field strength (E_{ind}) in a tissue is directly proportional to the external field strength or body current. For multiple sources, each source will contribute a component of E_{ind} at its particular frequency. The net E_{ind} in the tissue is the superposition of these components. The highest value of the Maximum RMS of the superposition of all these components is the algebraic sum of the Maximum RMS contribution from each frequency. (This value will only be attained at points in time when the separate E_{ind} components at the different frequencies all align in-phase, with respect to time. At this instant, the magnitude of the resultant is equal to the algebraic sum of the magnitudes of the individual components at the different frequencies.) This is based on the assumption that the induced electric field vectors at the different frequencies will all be aligned spatially, which represents the most conservative case.

The above reasoning is used as the basis for combining exposure fractions for the external fields and separately, for the induced and contact current. Since the spatial peak induced electric fields in tissue from external electric fields, magnetic fields,

induced current and contact current arise in different parts of the body, a separate Comparison Criterion is required for each type of external field and body current and all should be satisfied simultaneously.

The multiple source Comparison Criteria for NS-based reference levels are:

$$\sum_{i}^{U}\left(\frac{E_{MaxRMS,i}}{E_{RL-NS}}\right) \leq 1 \qquad (4-7)$$

$$\sum_{i}^{V}\left(\frac{H_{MaxRMS,i}}{H_{RL-NS}}\right) \leq 1 \qquad (4-8)$$

$$\sum_{i}^{W}\left(\frac{I_{MaxRMS,i}}{I_{RL-NS}}\right) \leq 1 \qquad (4-9)$$

where the sources in the set U are those where the electric field strength has been measured, sources in the set V are those where the magnetic field strength has been measured and sources in the set W are those where induced or contact current has been measured (note that if both contact current and induced current have been measured, two separate criteria of the form 4-9 above would apply, one for each type of current). The terms E_{MaxRMS}, H_{MaxRMS} are the Maximum RMS field strength exposure levels and I_{MaxRMS} is the Maximum RMS induced or contact current. Terms $E_{RL\text{-}NS}$, $H_{RL\text{-}NS}$ and $I_{RL\text{-}NS}$ are the NS-based reference levels.

Where field strengths are non-uniform and it is necessary to apply spatial averaging, Appendix D outlines the procedures that can be followed.

Case 3: Mixed NS- and SAR-based RLs Apply

Situations may exist where there is a mix of NS-based and SAR-based reference levels for some or all of the source frequencies. At each one of these frequencies, exposure fractions for both Maximum RMS and True RMS (or time-averaged power density) should be assessed and simultaneous satisfaction of both NS and SAR comparison criteria is required. For instance, if source #1 occurs at a frequency where both NS-based and SAR-based reference levels apply and source #2 occurs at a frequency where only SAR-based reference levels apply, then assessment of compliance against the NS-based reference levels would consist of a single assessment of the Maximum RMS field strength or Maximum RMS current from source #1. A comparison against SAR-based RLs would consist of assessments of the True RMS field strengths or current of both source #1 and source #2, and comparing the sum of the squares of the exposure fractions to

unity.

For the case of mixed NS- and SAR-based reference levels the Comparison Criteria for field strengths, currents and/or power densities are the same as those in (4-4) to (4-9) where, in this case, all should be satisfied simultaneously to demonstrate compliance to the basic restrictions.

Appendix B contains some examples of the implementation of these concepts.

4.2.5 Spatial Averaging

RF Surveys often encounter non-uniform fields where, in some cases, it is possible to find locations where the reading on the survey instrument exceeds the corresponding reference level while areas around it have values below the RLs. In some of these circumstances the basic restrictions may remain satisfied. Therefore, spatially-averaged field strength measurements can be used for comparisons to the reference levels to estimate whether or not the basic restrictions will be met.

Spatial averaging can be thought of as a means of quantifying a spatially non-uniform field distribution as a single field strength value for comparison to the applicable reference level. With reference to SAR-based reference levels, a spatial averaging scheme is conservative if for any body size, the spatially-averaged field strength at the reference level produces a whole-body average SAR equal to or smaller than the basic restriction. (A parallel statement can be made about NS-based reference levels.) In addition spatial averaging schemes can be designed to take into account peak, spatially-averaged SARs in the body. In this case, the scheme is conservative if a spatially-averaged field strength at the reference level produces a peak, spatially-averaged SAR less than or equal to the basic restriction. This factor is more significant at frequencies in the GHz range.

As outlined in Section 4.2.2, below 10 MHz, SC6-2015 contains reference levels (RLs) for both electric and magnetic field strength based on prevention of nerve stimulation (NS) and excessive whole-body averaged SAR. The way in which spatial samples are combined to yield a spatial average is different depending on the basis of the reference level (NS or SAR). For comparison to NS-based RLs, the spatial average is the arithmetic mean of the spatial samples of field strength. For SAR-based comparisons, the spatial average is based on a root-mean-square computation (i.e. the square root of the mean of the squares) for field strength and an arithmetic mean for power density.

In the applicable frequency ranges, spatial averages can be calculated according to:

$$< \mathrm{E_{MaxRMS}} > = \frac{1}{\mathrm{N}} \sum_{\mathrm{i=1}}^{\mathrm{N}} (\mathrm{E_{MaxRMS}})_{\mathrm{i}} \qquad (4-10)$$

$$< E_{TRMS} > = \sqrt{\frac{1}{N}\sum_{i=1}^{N}(E_{TRMS})_i^{\,2}} \qquad (4-11)$$

$$< S_{ave} > = \frac{1}{N}\sum_{i=1}^{N}(S_{ave})_i \qquad (4-12)$$

where the symbol < > denotes a spatially averaged quantity and N is the number of spatial samples. The spatial samples, denoted by $(E_{MaxRMS})_i$, $(E_{TRMS})_i$ and $(S_{ave})_i$ represent the Maximum RMS field strength, True RMS field strength and time-averaged power density, respectively. The formulas for computing spatially-averaged magnetic field strength, H, are identical in form to formulas 4-10 and 4-11, where H replaces E.

To see if spatially averaged measurements are required, the magnitude and location of the spatial-peak field strength should be determined using manual scanning. If the spatial-peak field strength is below the applicable reference level then no spatial averaging is necessary.

If the magnitude of the spatial-peak field strength exceeds the relevant reference level, spatial averaging can be utilized as a means for estimating whether the underlying basic restrictions will be met. Canadian, U.S., Australian and international standards and guidelines have suggested a number of spatial sampling schemes, as well as general guidance for spatial averaging [5-12]. Ideally, any adopted scheme should be validated e.g. using electromagnetic simulation, to ensure that all of the applicable basic restrictions are complied with when exposed at the spatially-averaged, reference level field strength for the worst-case exposure conditions and body sizes.

Given that such a validation check is not feasible in most cases, this document gives general guidance for spatial sampling in the frequency range 3 kHz to 3 GHz. For frequencies above 3 GHz, spatial averaging may not be conservative with respect to the spatial peak 1 g SAR basic restriction in SC6-2015.

Spatial sampling at relatively long distances from a source or sources and above a ground or walkway:

-Sampling field strengths in a vertical line is a conservative yet simple approach, with sampling no closer than 20 cm from the walkway or ground and extending to a maximum height that depends on the frequency range and whether measurements are to be compared to controlled or uncontrolled environment reference levels.

-In the whole-body resonance frequency range (approximately 30 MHz to 160 MHz), sampling over a shorter vertical range (e.g. only up to 1.2 m) affords greater protection for smaller sized bodies (i.e. children). Since field distributions that are greatest near the feet and taper towards the head produce the highest WBA-SARs per unit of field strength, sampling at lower heights is more important. Where measurements are to be compared to the controlled environment limits and where adults are the protected population group, sampling to a greater height (e.g. 1.8 m) may be justified.

-A minimum of 5 discrete samples has been found to be conservative provided the above consideration has been taken into account. (This gives 25 cm sample spacing for a 1.2 m maximum height and 40 cm spacing for a 1.8m maximum height). Alternatively, the built-in spatial sampling capability of some instruments can be utilized.

-For frequencies above approximately 1 GHz, sampling at precisely and equally spaced intervals has the potential to produce measurements at a succession of troughs in the field distribution leading to a non-conservative estimate. Some random “dither” in the selection of sample locations would help to alleviate this problem.

-Where field strengths from multiple sources have significant contributions at each sample location, the procedures for combining these contributions are identical to those used in formulating the Comparison Criteria discussed in Section 4.2.4. In this case the summations on the left hand side of the criteria can be used to calculate the relative sample field strength (i.e. relative to the limits in SC6-2015) at each spatial sample location. These are then averaged in a way similar to (4-10) to (4-12) and the result compared to unity. More details on this procedure are given in Appendix D.

-Magnetic fields in the 3 kHz-100 kHz frequency range should not be spatially averaged. In this frequency range the spatial-peak value of the Maximum RMS magnetic field strength should be compared to the reference level (as stipulated in Note 4 of Table 4 in SC6-2015).

Additional considerations for spatial sampling at relatively close distance to a single source:

-For comparison to either controlled or uncontrolled environment limits, sampling should be carried out over the height of an adult (1.8 m).

-The set of spatial samples should include the spatial peak field strength provided that it occurs somewhere within the 1.8m maximum height.

Note: A person performing survey measurements should approach the exposure source with caution to avoid potential overexposure. In questionable situations, measurements may be performed with the output power of the source reduced, or the surveyor may gradually approach the source from afar while monitoring the field as they approach.

4.3 Specific Absorption Rate (SAR)

The SAR should be determined for cases where exposures take place at 0.2 m or less from the source.

SAR assessments should be performed according to the requirements of SC6-2015, Section 2.1.2 with respect to averaging volume as a function of the intended location on the body. It should be remembered that the internal field within a human body, and thus the SAR, is not related to the external field in a simple way. Further information on SAR assessment can be found in the following standards [13-15].

Determination of SARs from near-field exposures of humans is difficult and can be done only on simulated models of the human body under laboratory conditions. Both computational methods and measurements are feasible.

There are two general approaches in computational methods [16]. One involves the use of an analytical technique for calculating the distribution of absorbed energy in simplified tissue geometries such as plane slabs, cylinders and spheroids, while the other uses a numerical formulation for analysing the coupling of RF energy to the more complex shapes of human bodies. Examples of numerical methods for SAR calculations are the impedance method, the method of moments and the finite difference time domain (FDTD) technique. Detailed representations of the complex geometry and composition of the human body have been made available using data from magnetic resonance imaging scans [17].

Measurement methods have been developed for determination of SAR in human phantoms made of tissue-equivalent synthetic material. There are two basic methods for SAR measurements:

(1) The first method involves the use of a temperature probe to measure the temperature change induced by absorbed RF energy, and then calculating SAR from:

$$\mathrm{SAR} = \mathrm{c}\,\frac{\Delta \mathrm{T}}{\Delta \mathrm{t}} \qquad (4-13)$$

where)T is the temperature rise (^{o}C) within the time interval)t (seconds), and *c* is the tissue (or phantom material) specific heat capacity (J/kg^{o}C). This method is appropriate for local SAR measurements when the exposure levels are sufficiently intense that the temperature rise is large enough to be measured by available probes (typically of the order 0.1 ^{o}C) and is not significantly influenced by heat transfer within or out of the body. To minimize the effect of heat transfer, only the initial, linear temperature rise after the application of RF power should be used in the calculation of SAR.

(2) The second method for SAR determination is to measure the electric field inside the body with implantable electric field probes and then calculate the SAR from:

$$\mathrm{SAR} = \sigma\frac{|\mathrm{E}|^2}{\rho} \qquad (4-14)$$

where Φ is the tissue conductivity (S/m), |E| is the magnitude of the electric field strength (True RMS value) induced in the tissue (V/m) and Δ is the mass density (kg/m^3). This method is suitable only for low values of SAR where the absorbed energy is insufficient to cause a detectable change in temperature. Instrumentation for this type of SAR measurement method usually includes an implantable electric field probe, a phantom and a computer controlled system for positioning the probe. The probes typically produce a DC voltage proportional to $|E|^2$ since they employ square-law detectors. In cases where the medium in which SAR is being determined is a homogeneous liquid, the probe can be calibrated directly in terms of SAR (Φ and Δ are constant) and then used to scan spatially to produce SAR patterns.

4.4 Contact and Induced Currents

4.4.1 Contact Current

An RF electric field can induce an alternating electric potential on ungrounded or poorly grounded conducting (metallic) objects such as cars, trucks, buses, cranes and fences. When a person touches such objects, RF current flows through the person to the ground (Figure 1). The amount of current depends on the object (its size, shape), the frequency and strength of the field and the person's impedance. The impedance in turn depends on the frequency, person's height, weight and body composition (ratio of the lean to fat body mass), type of contact (surface area of contact, i.e. finger touch or hand grasp, skin wet or dry), and the type of footwear.

Contact current flowing through the person is perceived at a certain level; at a

higher level it becomes painful and at a still higher level may cause an injury (e.g. local burn, respiratory tetanus, heart effects). Below a frequency of about 100 kHz the perception is of a tingling, prickling feeling in the finger or hand touching the object. At higher frequencies heat is perceived. Thresholds for perception and pain under various conditions have been established [18-19].

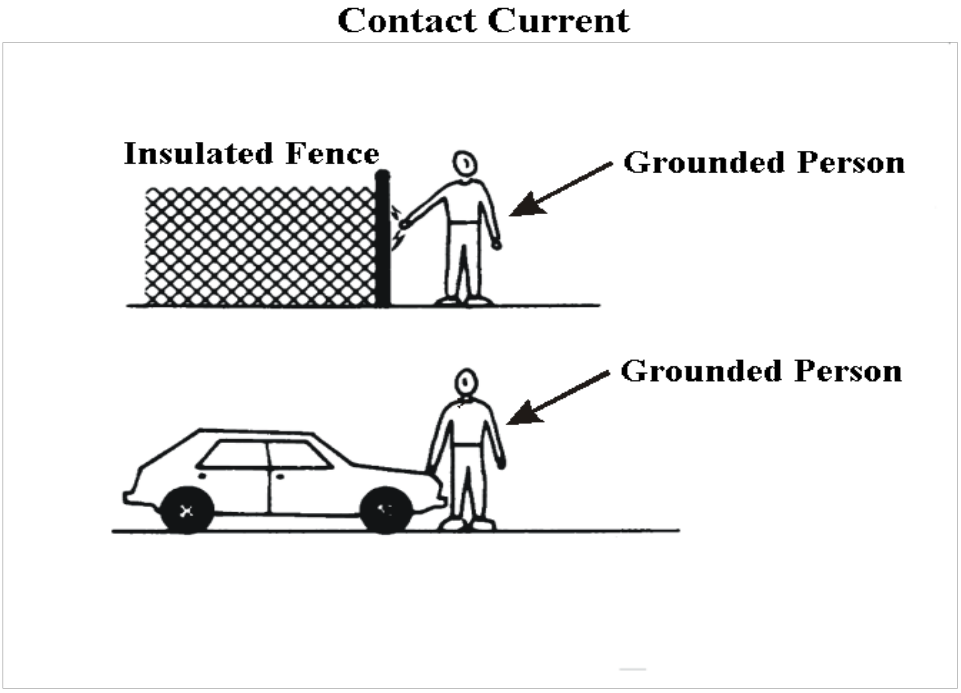

Figure 1. Typical situations where currents can be perceived by persons touching ungrounded or poorly grounded conducting objects

Currents below the limits specified in SC6-2015, Section 2.2.3 (Table 8) for controlled environments may be perceptible, but are not sufficient to cause any pain or damage such as burns. Currents below the limits specified in SC6-2015, Section 2.2.3 (Table 8) for uncontrolled environments will not be perceived.

Measurement of contact current, for comparison to the reference levels in SC6-2015, can be performed using an electronic circuit representing the impedance of the average human body in finger touch contact with an insulated, conductive object. Such a circuit is equipped with a touch electrode for contacting the object and a ground plate to serve as the ground electrode. The total current flowing from the touch electrode to the ground electrode represents the current that would flow in the human body [20]. Alternatively, contact current may be measured *in situ*, by use of an RF current transformer worn around the wrist or ankle by a human volunteer. In the case of ankle-worn measurements, the current flowing in both legs to ground must be accounted for.

4.4.2 Induced Current

Even though a person may not be touching a metallic object, RF currents are induced in the body by external RF fields and may flow down through the body to the ground. Induced currents are greatest for vertically polarized electric fields and are generally proportional to the square of the height of the body [21].

Induced current can be measured by using either an RF current transformer worn around the ankle(s) by a human volunteer or having the volunteer stand on a platform-type current meter. The latter generally consists of a low-inductance resistor connected between two parallel conductive plates located one above the other. With the lower plate in contact with the ground, and a person standing on the upper plate, the voltage drop across the resistor is proportional to the induced current [22]. Since the induced current reference levels in SC6-2015 are specified for a single foot, account must be made of this when using a platform-type current meter. Also, since current magnitude is related to body height, this should be accounted for in order to obtain consistent measurements from volunteers of different statures.

Note: Under certain conditions, the induced current or contact current may exceed the limits specified in SC6-2015, Section 2.2.3 (Tables 7 and 8), even though the electric field strengths are below the limits specified in Tables 3, 5 and 6. These conditions may occur when the electric field strength is as low as 25% of the exposure limits.

4.5 Records and Recommendations

(a) Records should be kept for all RF survey measurements and their evaluation. The records should include the date the measurements were made, the number and type of devices in the area surveyed, the locations of measurements with respect to RF emitting devices, the names of the organization and test personnel that conducted the survey(s), survey results and associated uncertainties [4], as well as the model, serial number and calibration date of the measuring instrument(s) used. Other information that may prove useful would be photographs, floor plans, etc.

(b) Recommendations on appropriate changes in shielding, location and operation of the device, based on the evaluation of the survey measurements, should be made to the person(s) responsible for the device. When a remedial action based upon these recommendations has been taken, another survey should be made to verify the effectiveness of the actions.

5. Theoretical Estimation of Exposure Fields

5.1 Near-field and Far-field Zones

Based on the radiating element size and type, sources of RF fields may have

widely different characteristics. RF sources can be divided as follows:

(a) large antennas; i.e. antennas whose dimensions are greater than the wavelength (λ),

(b) small antennas; i.e. antennas whose dimensions are less than the wavelength (λ),

(c) sources producing leakage (stray) fields (e.g. RF dielectric heaters, RF induction heaters, radar components).

The space around a source antenna can be divided into two regions, the near-field zone and the far-field zone (Figure 2). The near-field zone can be further divided into two regions: the reactive near-field region and the radiating near-field region. The region of space immediately surrounding the antenna in which the induction (reactive) field exists is known as the reactive near-field region. Most RF energy in this region is not radiated but is stored and field strengths in this region vary rapidly with distance. At a distance further away from the antenna, the reactive near-field region gives way to the radiating near-field. In the radiating near-field region, the energy propagates away from the antenna, but the radiation still lacks a plane-wave character. Beyond the radiating near-field region is the far-field zone, in which the field strength varies inversely with distance from the antenna and has plane-wave characteristics.

Towards the end of the radiating near-field region and in the far-field zone, the electric and the magnetic fields are interrelated with each other and with the equivalent plane-wave power density as follows:

$$\frac{E}{H} = \eta \qquad (5-1)$$

and,

$$\frac{E^2}{\eta} = H^2\eta = S_{eq} \qquad (5-2)$$

where,

E = electric field strength, in volts per metre (V/m)
H = magnetic field strength, in amperes per metre (A/m)
S_{eq} = equivalent plane-wave power density, in watts per square metre (W/m^2)
η = free space wave impedance (= 377 Ω)

The relationship given by formula (5-1) is important because in the zones where it

is applicable (within a tolerance), the strength of one of the fields can always be estimated from the strength of the other field type at every point in space. In these zones, only one of the field quantities (i.e. E, H or S) needs to be assessed in order to fully determine whether the exposure limits are satisfied.

Various formulas or guidances can be found for estimating the distance to the beginning of the far-field zone for the different sizes of antennas. They are often based on criteria such as antenna pattern or gain. An additional consideration is the range where the estimation formulas described in Section 5.2 begin to be valid.

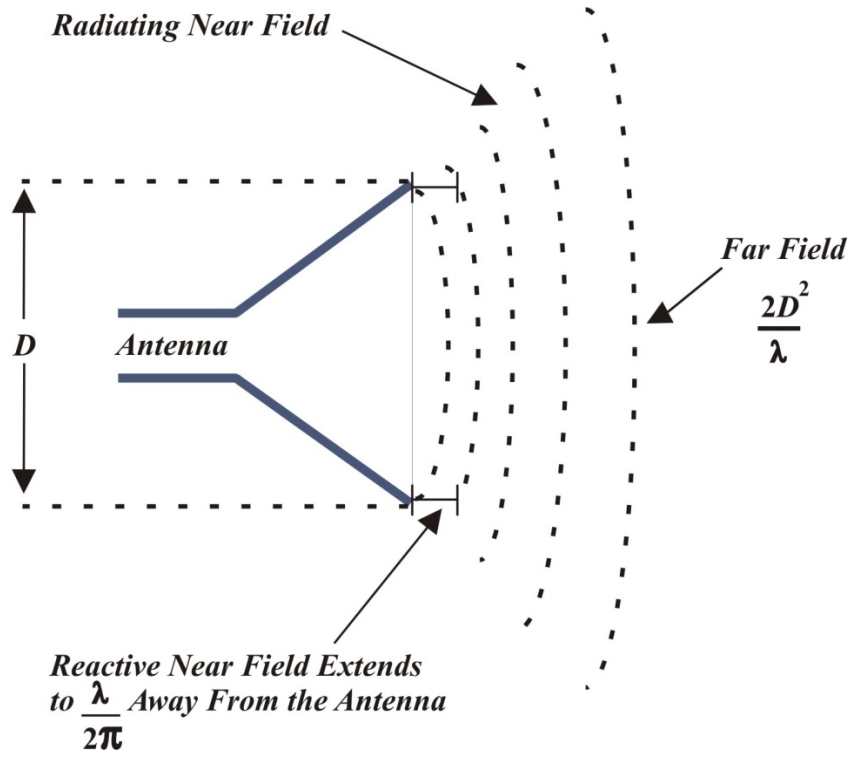

Figure 2. Antenna size versus separation of the reactive near-field region, the radiating near-field region and the far-field zone

5.1.1 Large Antennas

An antenna whose largest dimension is greater than the wavelength of its operating frequency is referred to as a large antenna. Examples of larges antennas include parabolic reflectors, arrays and horn antennas. The near-field zone of these antennas consists of the reactive region extending to the distance given by:

$$R_S = \frac{\lambda}{2\pi} \qquad (5-3)$$

where,

R_s = extent of the reactive near-field region, in metres (m)
λ = wavelength, in metres (m).

The reactive near-field is followed by a radiating near-field region where the field strength does not necessarily decrease with distance away from the antenna, but may exhibit an oscillatory character.

The distance from the antenna to the far-field zone is usually taken to be:

$$R_f = \frac{2D^2}{\lambda} \qquad (5-4)$$

where R_f is the radial distance to the near-field/far-field boundary, D is the greatest dimension of the antenna and λ is the wavelength.

At the onset of the far-field zone, the maximum phase difference of electromagnetic waves coming from different points of the antenna is 22.5 degrees [23]. For the purpose of estimating field strength compliance with SC6-2015, a larger phase difference, and thus a shorter distance marking the beginning of the far-field zone is acceptable to estimate a worst-case scenario. A realistic, practical distance from a large antenna (e.g. a parabolic reflector), where the far-field zone begins is [24]:

$$R_f = \frac{0.5D^2}{\lambda} \qquad (5-5)$$

where,
R_f = distance to the beginning of the far-field zone, in metres (m)
D = the greatest dimension of the antenna, in metres (m)
λ = wavelength, in metres (m)

5.1.2 Small Antennas

An antenna whose largest dimension is no greater than the wavelength at its operating frequency is referred to as a small antenna (e.g. resonant dipoles, Yagi and log-periodic antennas). The reactive near-field region of these antennas extends up to the distance given by (5-3)[1].

For some small antennas, it can be shown that (5-1) starts to become applicable

[1] Capps C, Near field or far field? EDN Network, August 16, pp 95-102, 2001. Available from: http://www.edn.com/design/communications-networking/4340588/Near-field-or-far-field-

(with an error less than 10%) at distances of at least 0.5λ from the antenna along the principle radiation axis or plane [9]. As an example, for dipoles ranging in length from much less than a wavelength up to resonant length (equal to one-half wavelength) the ratio of E/H differs by about 10% (or 0.8 dB) from the far-field value of 377 Ω at a distance of 0.5λ along the principal radiation axis. This rule of thumb can also be used for Yagi antennas if the distance is referenced to the furthest-most parasitic element of the array. For a monopole with ground plane, larger distances may be required, depending on the ground plane design. A case-by-case treatment appears needed to adequately consider potential edge effects of the ground plane. With the availability of electromagnetic computational modelling software, distances where (5-1) begins to be applicable can be computed for monopole antennas and other specific antenna types.

5.1.3 Sources Producing Leakage Fields

For RF leakage sources such as waveguide flanges with poor contacts between them, there is no reliable method for estimating the extent of the near-field zone, its type (whether reactive or radiating region) or the field strengths. Some situations may be amenable to computational modelling in order to determine RF field levels, however, the best approach is through measurement.

5.2 Formulas for estimation of field strength and power density.

There is no general formula for theoretical estimation of the field strength in the near-field zone. While reasonable calculations are possible for some small antennas (e.g. dipoles and monopoles), field measurements or numerical simulation are required to evaluate field strength in the near-field zone in most situations.

In the far-field zone, the power density on the main beam axis can be estimated from the formula:

$$S = \frac{EIRP}{4\pi r^2} = \frac{P_T G}{4\pi r^2} \qquad (5-6)$$

where,
EIRP = effective isotropically radiated power, in watts (W)
r = distance from the antenna, in metres (m)
P_T = net power delivered to the antenna, in watts (W)
G = antenna gain (power ratio) with respect to an isotropic antenna

The antenna gain in the far-field is related to the antenna dimensions [23], according to the following formula:

$$G = \frac{4\pi A_e}{\lambda^2} \qquad (5-7)$$

where,
A_e = effective area of the antenna, $A_e = \varepsilon A$
A = physical aperture area of the antenna, in square metres (m^2)
ε = antenna efficiency (typically $0.5 \leq \varepsilon \leq 0.75$)
λ = wavelength, in metres (m)

An electromagnetic wave can also be characterized by the electric field strength and magnetic field strength. The electric field strength at a distance r from a source with the EIRP on the main beam axis, as derived from formulas (5-2) and (5-6), is equal to:

$$E = \frac{[30\ EIRP]^{0.5}}{r} \qquad (5-8)$$

and is expressed in volts per meter (V/m). The corresponding magnetic field strength can be calculated from the estimated electric field strength by using formula (5-1).

Graphs relating power density and electric and magnetic field strengths in free space in the far field zone of the antenna are shown in Figure 3.

Formulas (5-6) and (5-8) are used to determine the power density and electric field strength in the far-field zone in a worst case condition where maximum power gain (formula 5-7) is applied. It should be noted that it is not always possible to predict the levels of maximum field strength in and around sites of concern. This is due to the fact that RF fields may be absorbed, reflected and refracted by objects in a random and unpredictable manner. As such, the best way to determine actual levels of RF field strength is by measurement.

5.3 Average Power of Pulsed Waves
A pulse-modulated wave (pulsed wave) is shown in Figure 4. This type of radiation is characteristic of radar emissions.

The duty factor (F) for a pulsed waveform is defined by the following relationship:

$$P_a = P_p F \qquad (5-9)$$

where,
P_a = the time-averaged power that is fed to the transmitter, in watts (W)
P_p = peak envelope power (see "Definitions Section") or time-averaged power during the pulse duration, in watts (W)
F = duty factor

For square pulses, the duty factor can be calculated as:

$$F = \frac{T}{T_r} \qquad (5-10)$$

where,
T = pulse duration, in seconds (s)
T_r = time lapse between the start of consecutive pulses, in seconds (s)

The pulse repetition frequency is equal to:

$$f_p = \frac{1}{T_r} \qquad (5-11)$$

where,
f_p = pulse repetition frequency, in hertz (Hz)
T_r = time lapse between the start of consecutive pulses, in seconds (s).

The time-averaged power density (S_{ave}) of the resulting pulsed electromagnetic wave is given by:

$$S_{ave} = S_p F \qquad (5-12)$$

where,

S_p = time-averaged power density during the pulse duration (similar in concept to the peak envelope power), in watts per square metre (W/m^2)
F = duty factor.

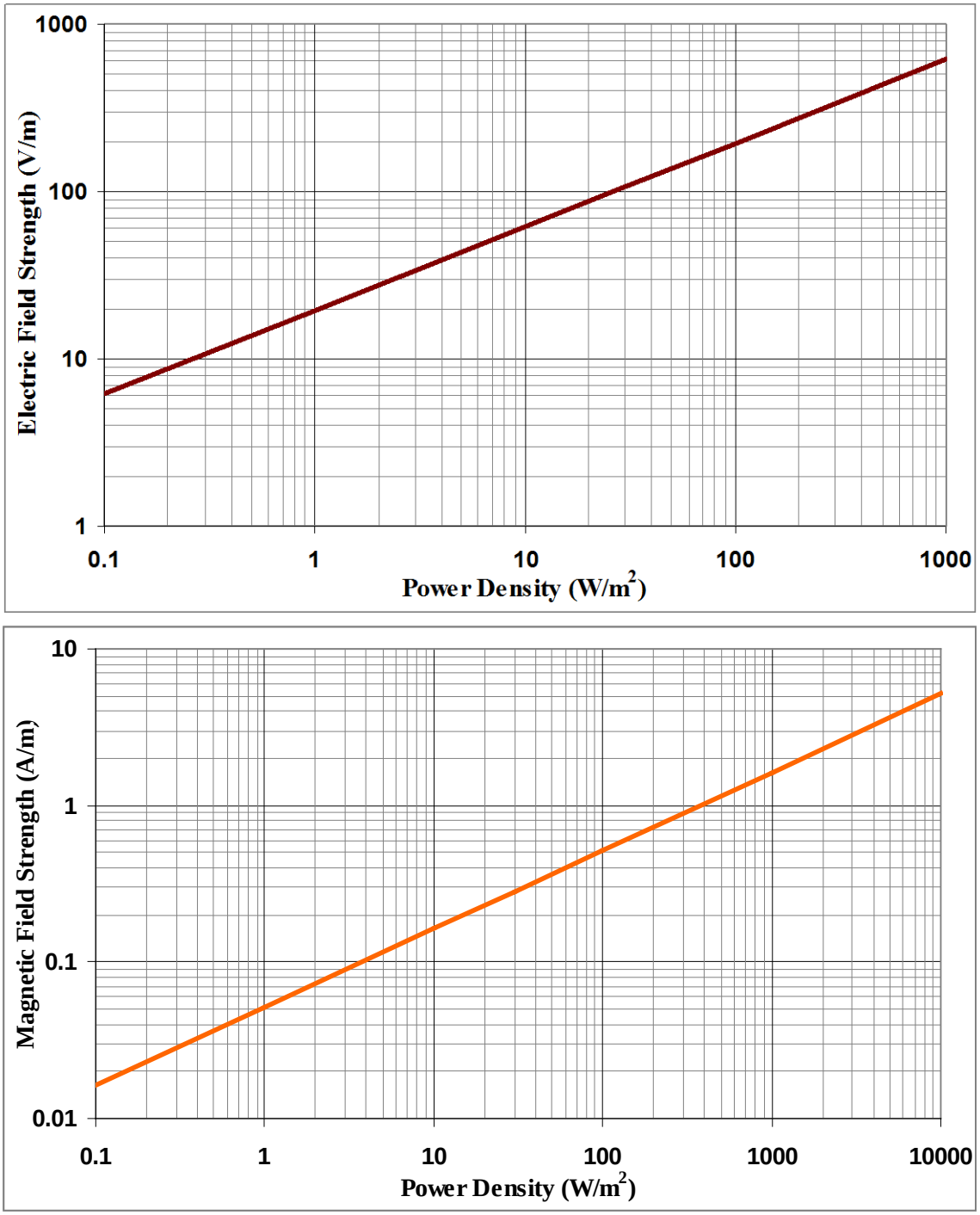

Figure 3. Conversion charts for plane waves. (Note, the conversion from W/m^2 to mW/cm^2 is: 10 W/m^2 = 1 mW/cm^2)

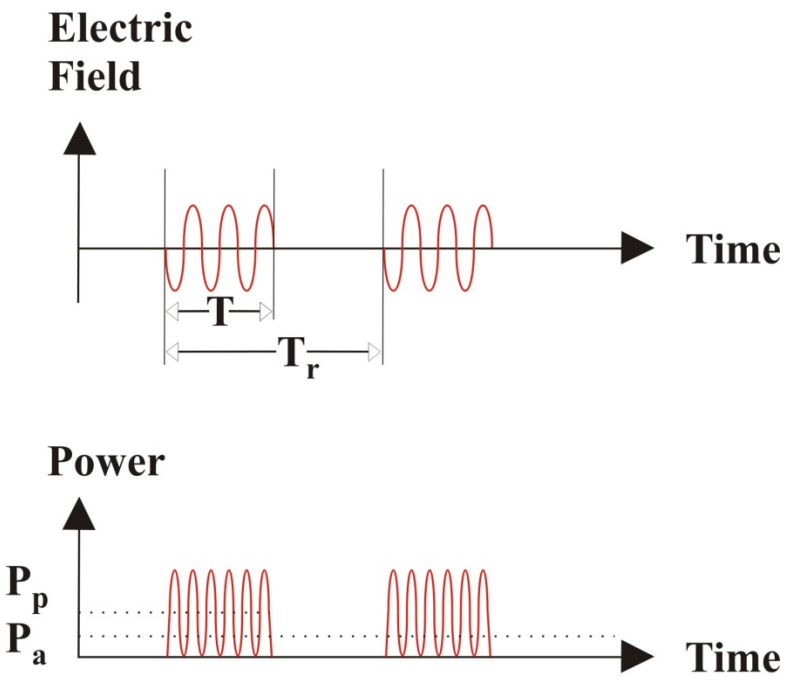

Figure 4. Pulse-modulated field (upper) due to pulsed power fed to the transmitter (lower).

5.4 Scanning Antennas

The effective power density as seen from a stationary point at a given distance from a scanning antenna in motion can be estimated from the power density measured with the antenna stationary using the formula:

$$S_m = KS_s \qquad (5-13)$$

where,

S_m = effective time-averaged power density for the antenna in motion, in watts per square metre (W/m^2)

K = antenna rotational reduction factor

S_s = time-averaged power density measured on the main beam axis of the stationary antenna at the same distance, in watts per square metre (W/m^2)

The rotational reduction factor for the near-field zone is equal to:

$$K = \frac{a}{R_\emptyset} \qquad (5-14)$$

and,

$$R_\emptyset = r\,\emptyset \qquad (5-15)$$

where,
a = the dimension of the antenna in the scan (rotation) plane, in metres (m)
$R_{\emptyset}$ = the circumference of the antenna scan sector at the same distance r, in metres (m), at which the measurements have been done (Figure 5)
N = scan angle, in radians

The rotational reduction factor for the far-field zone is:

$$K = \frac{\text{3 dB beamwidth}}{\text{Scan angle}} \qquad (5-16)$$

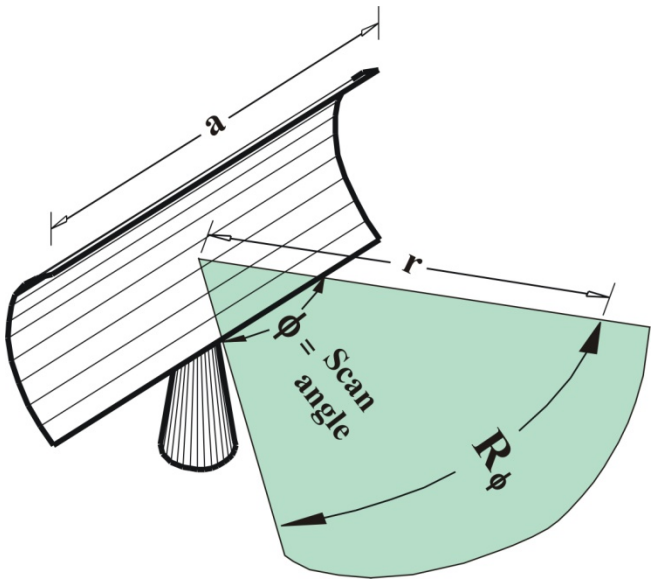

Figure 5. Rotational reduction factor in the near-field.

Definitions

anechoic - neither possessing nor producing radiofrequency (RF) reflections.

antenna - an electrical device that converts electric currents into propagating electric and magnetic fields in the form of waves (i.e. radio waves or electromagnetic waves) and vice versa.

basic restriction – maximum allowable internal electrical quantities in the body, arising from exposure to incident external fields, that prevent the occurrence of all established adverse health effects.

carrier – a radio frequency, usually a sine wave, upon which a modulation composed of lower frequencies, is superimposed.

comparison criterion – a summation of exposure fractions due to multiple independent sources that, when less than or equal to unity, demonstrates that a type of reference level is not exceeded.

contact current – the total current flowing through the body to ground resulting from finger-touch contact with an insulated conductive object that has been energized in an electric field, or from an insulated body that has been energized in an electric field and is in finger-touch contact with a grounded conductive object.

continuous wave (CW) – successive oscillations which are identical under steady-state conditions (e.g. an unmodulated carrier).

controlled environment – an area where the RF field intensities have been adequately characterized by means of measurement or calculation and exposure is incurred by persons who are: aware of the potential for RF field exposure, cognizant of the intensity of the RF fields in their environment, aware of the potential health risks associated with RF field exposure and able to control their risk using mitigation strategies.

decibel – 20 times the base-10 logarithm of the ratio (x/y) where x and y are field strengths or current amplitudes or 10 times the base-10 logarithm of the ratio (x/y) where x and y are power densities or SAR values.

electric field – a vector quantity assigned to any point in space by which the magnitude and direction of the force that would be experienced by a hypothetical test charge, is defined.

exposure fraction – the fraction of the relevant reference level or basic restriction that is due to a single electromagnetic source in the presence of multiple independent sources.

far-field zone – the space beyond an imaginary boundary around an antenna, which marks the beginning of where the angular field distribution is essentially independent of the distance from the antenna. In this zone, the field has a predominantly plane-wave character.

field strength – the magnitude of the electric or magnetic field, normally a root-mean-square (RMS) value.

frequency – for a periodic waveform, it is the number of cycles or periods within one second, expressed in units of hertz (Hz). For the purposes of this guide, the term is applied to the number of periods within one second of a continuous wave (CW) or an unmodulated carrier. Once modulated, the "frequency" of the resulting waveform is taken to be that of the unmodulated carrier for the purposes of calculating or determining the applicable reference levels.

frequency-shaped field probe – an electromagnetic field probe (usually isotropic) in which the output response is the inverse of the frequency shape of the reference level quantity it is designed to measure. This type of probe provides an instantaneous read out of the correctly-weighted combination of all of the frequency components of the fields within its bandwidth. The output reading is usually in units of "percent of reference level".

general public – individuals of all ages, body sizes and varying health status, some of whom may qualify for the conditions defined for the controlled environment in certain situations.

impedance – a measure of opposition to a sinusoidal alternating current (AC)

induced current – it is the current flowing downwards in the lower limbs, through the feet, to ground in a free-standing human body (i.e. no contact with any conductive objects except the ground) exposed to an electric field.

instantaneous RMS (root mean square) – as applied to a waveform, it is the square root of the average of the square of the instantaneous field strength or current waveform taken throughout one period of the carrier waveform.

isotropic – exhibiting properties with the same values when measured in all directions.

magnetic field – a vector quantity assigned to any point in space where the magnitude and direction of the force that would be experienced by a hypothetical test charge-in-motion, is defined. A magnetic field exerts a force on charges only if they are in motion, and charges produce magnetic fields only when they are in

motion.

maximum RMS – the temporal maximum of the RMS envelope of the field strength or current waveform.

microwave – a portion of the radiofrequency spectrum that has a frequency generally between 1 GHz and 300 GHz or a wavelength between 1 mm and 30 cm.

near-field zone – a volume of space close to an antenna or other radiating structure in which the electric and magnetic fields do not have a substantially plane-wave character, but vary considerably from point to point at the same distance from the source.

power density – the rate of flow of electromagnetic energy per unit area usually expressed in W/m^2 or mW/cm^2 or :W/cm^2.

peak envelope power – the average power delivered to a load during one cycle of the radiofrequency carrier at the crest of the modulation envelope.

radiofrequency (RF) – a rate of oscillation in the range of about 3 kHz to 300 GHz, which generally corresponds to the frequency of electromagnetic waves propagated in the air used in radio communications.

radiation (electromagnetic) – the emission or transfer of energy through space in the form of electromagnetic waves.

radiating near-field zone – the region between the reactive near-field and the far-field wherein the radiation field dominates the reactive field, but lacks substantial plane-wave character.

reactive near-field zone – the region that is closest to an antenna or other radiating structure and contains most or nearly all of the stored energy.

reference level – an easily measured or calculated quantity (i.e. externally applied electric field strength, magnetic field strength and power density or resulting body current), that when respected, ensures compliance with the underlying basic restrictions in SC6-2015.

reference period – a time period used for averaging temporally non-uniform RF field exposures, for comparison with the exposure limits in SC6-2015. The reference periods specified in SC6-2015 are based upon the relevant adverse health effect to be avoided and the time for those responses to occur.

RF device – a device which, as a result of its operation, intentionally or

unintentionally emits RF electric and magnetic fields and/or waves.

RMS envelope – a curve, traced out in time, of the instantaneous RMS values of a modulated waveform.

RMS (root mean square) – as applied to a set of data, it is the square root of the average of the square of the data values.

safety interlock – a switch that ensures that the doors, gates, or guards are closed before a process which could be harmful to individuals can start up.

specific absorption rate (SAR) – is a measure of the rate at which energy is absorbed by the body (or a discrete tissue volume) when exposed to radiofrequency (RF) fields. SAR is expressed in units of watts per kilogram (W/kg), and can be calculated from the product of the tissue conductivity (S/m) and the square of the RMS electric field strength induced in the tissue (V/m), divided by the mass density (kg/m^3) of the tissue.

True RMS – the square root of the temporally-averaged squared value of a waveform. For a modulated carrier, the averaging is carried out over a sufficiently long period in order to yield an unchanging value of True RMS as the averaging interval is incrementally increased. For an unmodulated, sinusoidal or non-sinusoidal waveform, averaging is carried out over a single cycle.
Note: readers should consult manuals or if still unsure, the instrument manufacturer, to ensure that the temporal quantities measured by the instrument are consistent with the quantities defined in this guide.

uncontrolled environment – an area where at least one of the criteria defining the controlled environment is not met.

wavelength – the distance travelled by a propagating wave in one cycle of oscillation.

References

1. Health Canada. Limits of Human Exposure to Radiofrequency Electromagnetic Energy in the Frequency Range from 3 kHz to 300 GHz. Safety Code 6, 2015.

2. International Organization for Standardization (ISO). Graphical symbols – Safety colours and safety signs – Registered safety signs. ISO 7010: 2011.

3. Health Canada. Radiation Emitting Devices Regulations, Schedule II, Part III, Microwave Ovens. C.R.C., c.1370, 2014. (http://laws.justice.gc.ca/en/showdoc/cr/C.R.C.-c.1370/sc:2//en)

4. Joint Committee for Guides in Metrology (JCGM). Evaluation of measurement data — Guide to the expression of uncertainty in measurement. JCGM 100: 2008. (http://www.bipm.org/en/publications/guides/gum.html)

5. Standards Australia. Radiofrequency fields - Principles and methods of measurement and computation - 3 kHz to 300 GHz. AS/NZS 2772.2: 2011.

6. International Electrotechnical Commission (IEC). Determination of RF field strength and SAR in the vicinity of radiocommunication base stations for the purpose of evaluating human exposure. Geneva, IEC-62232: 2011.

7. Institute of Electrical and Electronic Engineers (IEEE). C95.1-2005 - IEEE Standard for Safety Levels with Respect to Human Exposure to Radio Frequency Electromagnetic Fields, 3 kHz to 300 GHz. New York, USA, 2005.

8. Institute of Electrical and Electronic Engineers (IEEE). C95.3-2002 - IEEE Recommended Practice for Measurements and Computations of Radio Frequency Electromagnetic Fields with Respect to Human Exposure to Such Fields, 100 kHz - 300 GHz. New York, USA, 2002.

9. Australian Radiation Protection and Nuclear Safety Agency (ARPANSA). Radiation Protection Standard for Maximum Exposure Levels to Radiofrequency Fields - 3 kHz to 300 GHz. Radiation Protection Series (RPS3), 2002.

10. Federal Communications Commission (FCC). Evaluating compliance with FCC Guidelines for Human Exposure to Radiofrequency Electromagnetic Fields. Office of Engineering & Technology, OET Bulletin 65, Edition 97-01, 1997.

11. Industry Canada. Guidelines for the Measurement of Radio Frequency Fields at Frequencies from 3 kHz to 300 GHz. Guideline (GL-01, Issue 2), Spectrum Management and Telecommunications, 2005.

12. Industry Canada. Safety Code 6 (SC6) Measurement Procedures (Uncontrolled Environment). Technical Note (TN-329), Spectrum Management and Telecommunications, 2011.

13. International Electrotechnical Commission (IEC). Human exposure to radio frequency fields from hand-held and body-mounted wireless communication devices - Human models, instrumentation, and procedures - Part 1: Procedure to determine the specific absorption rate (SAR) for hand-held devices used in close proximity to the ear (frequency range of 300 MHz to 3 GHz). IEC 62209-1 (Edition 1.0), 2005.

14. International Electrotechnical Commission (IEC). Human exposure to radio frequency fields from hand-held and body-mounted wireless communication devices - Human models, instrumentation, and procedures - Part 2: Procedure to determine the specific absorption rate (SAR) for wireless communication devices used in close proximity to the human body (frequency range of 30 MHz to 6 GHz). IEC 62209-2 (Edition 1.0), 2010.

15. Institute of Electrical and Electronic Engineers (IEEE). 1528-2013 - IEEE Recommended Practice for Determining the Peak Spatial-Average Specific Absorption Rate (SAR) in the Human Head from Wireless Communications Devices: Measurement Techniques. New York, USA, 2013.

16. Lin JC and Bernardi P. "Computational Methods for Predicting Field Intensity and Temperature Change" In: "Handbook of Biological Effects of Electromagnetic Fields – Bioengineering and Biophysical Aspects of Electromagnetic Fields". Barnes FS and Greenebaum B (Eds.) CRC Press, Boca Raton, USA, 2007.

17. Gandhi OP. Some Numerical Methods for Dosimetry: Extremely Low Frequencies to Microwave Frequencies. Radio Science 30: 161-177, 1995.

18. Reilly JP. Applied Bioelectricity: From Electrical Stimulation to Electropathology. Springer, New York, USA, 1998.

19. Institute of Electrical and Electronic Engineers (IEEE). C95.6-2002 – IEEE Standard for Safety Levels with Respect to Human Exposure to Electromagnetic Fields, 0-3 kHz. New York, USA, 2002.

20. Stuchly MA, Kozlowski JA, Symons S and Lecuyer DW. Measurements of contact currents in radiofrequency fields. Health Physics 60: 547-557, 1991.

21. Gandhi OP, Chen JY and Riazi A. Currents Induced in a Human Being for Plane-Wave Exposure Conditions 0-50 MHz and for RF Sealers. IEEE Transactions on Biomedical Engineering 33: 757-767, 1986.

22. Tofani S, d'Amore G, Fiandino G, Benedetto A, Gandhi OP and Chen JY. Induced foot-currents in humans exposed to VHF radio-frequency EM fields. IEEE Transactions on Electromagnetic Compatibility 37: 96-99, 1995.

23. Stutzman WL and Thiele GA. Antenna Theory and Design, John Wiley and Sons, New York, USA, 1998.

24. World Health Organization. Environmental Health Criteria 137: Electromagnetic Fields (300 Hz - 300 GHz), 1993.

Appendix A

Criteria for determining priority of NS- or SAR-based reference levels, 0.1-10 MHz, based on the temporal characteristics of the field-strength waveform

In the frequency range 0.1-10 MHz, where NS- and SAR-based reference levels overlap, the two must be complied with simultaneously. Ordinarily, two sets of field assessments are required, one for the True RMS and another for the Maximum RMS field strength. Depending on the relative values of the two types of applicable reference levels, only one of the field quantities may need to be assessed. For instance, if at a certain frequency, the ratio of the True RMS to Maximum RMS field strength (denoted as T/M) is less than the ratio of the relevant SAR-based to NS-based reference levels (i.e a critical value of T/M), compliance to the NS-based reference level automatically guarantees compliance to the SAR-based one. For this case, only an assessment of the Maximum RMS field strength is necessary to demonstrate compliance to both types of reference level.

This idea can be generalized by noting that the ratio of SAR-based to NS-based reference levels at each frequency describes the critical value of T/M as a function of frequency. For field strength waveforms with T/M less than the critical value, demonstration of compliance with the NS-based reference levels guarantees compliance with the corresponding SAR-based ones. Conversely, for a value of T/M greater than the critical value, demonstration of compliance with the SAR-based reference levels guarantees compliance with the corresponding NS-based ones.

The ratio T/M is a property of the temporal characteristics of the field strength waveform in a manner similar to the duty factor. Provided that the modulation bandwidth is much smaller than the carrier frequency, the ratio T/M is the same in the near-field and far-field for both electric and magnetic fields and is the same as for the signal that is fed to the antenna. (For pulsed RF waveforms using square pulses, the ratio T/M is equal to the square root of the duty factor.) For this reason, the ratio T/M can be assessed by means other than through field strength measurement, e.g. using the known characteristics of the signal that is modulating the carrier.

In the case of non-uniform field distributions, it can be seen from formulas (4-10) and (4-11) in Section 4.2.5 that the different way spatial samples are averaged (arithmetic mean for Maximum RMS and root mean square for True RMS), causes the ratio of the spatially-averaged True RMS to Maximum RMS field strengths to deviate slightly from the T/M ratio of the signal waveform. This effect is small for an assumed range of field non-uniformities having field gradients up to 10:1 or 20 decibels over the height of an adult. For this gradient, the ratio $<E_{TRMS}>/<E_{MaxRMS}>$ is estimated to be 10% larger than the ratio of T/M of the waveform. This can be compensated by making an adjustment to the critical values of T/M by a reduction of 5% from the ratios of the reference levels.

(Note: the analysis assumed a range of linear field distributions over a vertical line from a height of 0.2 m to 1.8 m and with slopes from 1:1 to 10:1 (both positive and negative). It was found that the effective critical values of T/M were reduced by a factor that ranged from 0% for a uniform distribution (slope 1:1) to 10% for one with a field strength gradient having a variation of 10:1).

The worst case errors caused by this adjustment to the critical values occur when:

a. The field strength gradient over the span of heights from 0.2 m to 1.8 m is 10:1, the T/M ratio of the waveform equals the adjusted critical value and the spatially-averaged Maximum RMS field strength is at its reference level. Under these conditions, the spatially-averaged True RMS field strength will be 5% above its reference level limit.

b. The field strength gradient is 1:1 (i.e. uniform), the T/M ratio of the waveform equals the adjusted critical value and the True RMS field strength is at its reference level. Under these conditions, the Maximum RMS field strength will be 5% above its reference level limit.

Based on the above arguments, the adjusted critical values of the ratio T/M, denoted by T/M_e for the electric field and T/M_h for the magnetic field, are given below. They are computed from the ratios of SAR-based to NS-based reference levels in Tables 3 and 4 of SC6-2015 as a function of frequency and the result reduced by a factor of 5% to account for field non-uniformity:

$$T/M_e = {}^{0.996}\Big/_{\sqrt{f_{MHz}}} \qquad 1.10 < f_{MHz} < 10\,,\ \text{Uncontrolled}$$

$$T/M_e = {}^{1.079}\Big/_{\sqrt{f_{MHz}}} \qquad 1.29 < f_{MHz} < 10\,,\ \text{Controlled}$$

$$T/M_h = {}^{0.00771}\Big/_{f_{MHz}} \qquad 0.10 < f_{MHz} < 10\,,\ \text{Uncontrolled}$$

$$T/M_h = {}^{0.00844}\Big/_{f_{MHz}} \qquad 0.10 < f_{MHz} < 10\,,\ \text{Controlled}$$

where the subscript e or h denotes the electric or magnetic field related quantity and f_{MHz} is the frequency in MHz.

The four plots in Figures A1 to A4 illustrate these concepts graphically. To make use of these graphs, the value of the T/M ratio of the field waveform must be assessed either through measurement or from the known characteristics of the signal or modulation. If, at the frequency of interest, the value of T/M, in decibels, is in the blue area, then only the True RMS field strength needs to be measured and compared against the relevant SAR-based reference level. If the True RMS field strength is in compliance, then so will be the Maximum RMS field strength. Conversely, a decibel value of T/M in the red area implies that only an assessment of the Maximum RMS field strength is necessary.

Example A-1
A site transmits a pulsed RF signal at 3.0 MHz with a pulse duty factor of 10%. It is to be investigated whether single-type measurements of either True RMS or Maximum RMS field strength can be made for both electric and magnetic fields in the near-field for comparison to the uncontrolled reference levels.

The T/M ratio of the field strength waveforms (both E and H) is equal to the square root of the duty factor:

$$T/M = \sqrt{(0.1)} = 0.32$$

The adjusted critical values of T/M for the uncontrolled environment are calculated to be:

$$T/M_e = 0.996/\sqrt{(3.0)} = 0.58 \qquad T/M_h = 0.00771/\ 3.0 = 0.00257$$

Since the T/M of the waveform (0.32) is smaller than the adjusted critical value for electric field strength (0.58), only the Maximum RMS electric field strength needs to be sampled and spatially averaged. If the result is compliant with the NS-based reference level then the SAR-based reference level will also be satisfied.

For the magnetic field, the T/M of the waveform (0.32) is larger than the adjusted critical value for magnetic field strength (0.00257). In this case, only the True RMS magnetic field strength needs to be sampled and spatially averaged. Compliance to the SAR-based reference level assures compliance to the NS-based one as well.

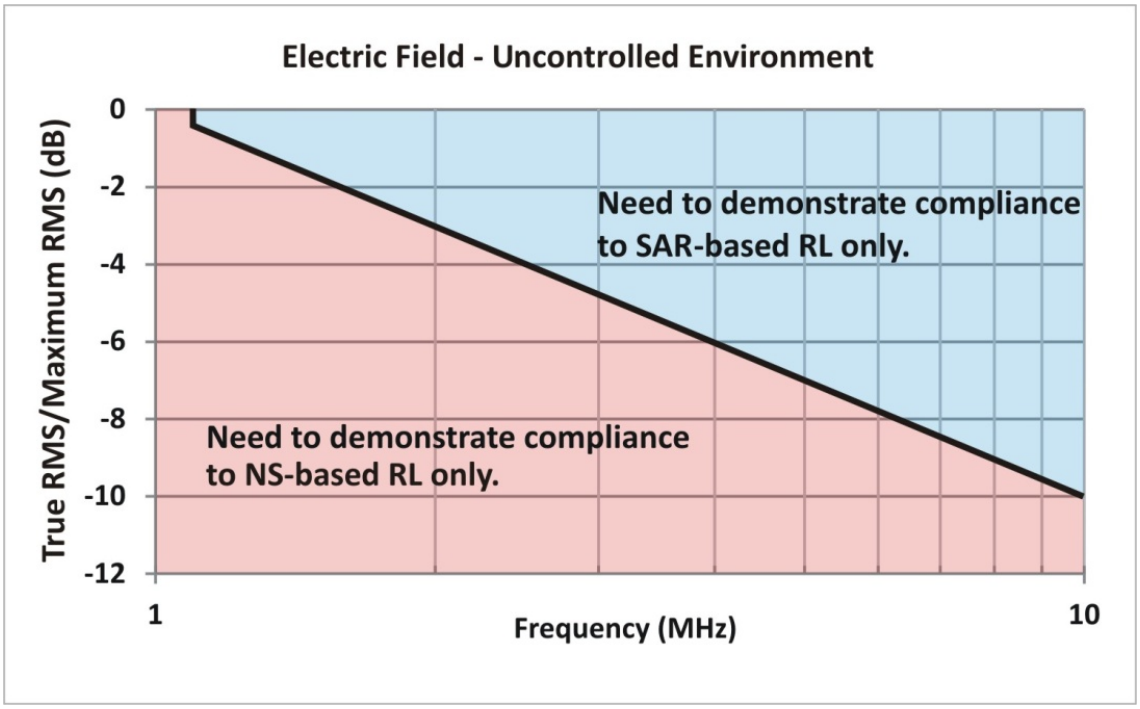

Figure A1. Criteria for assessment of electric field strength for comparison against the uncontrolled electric field reference level.

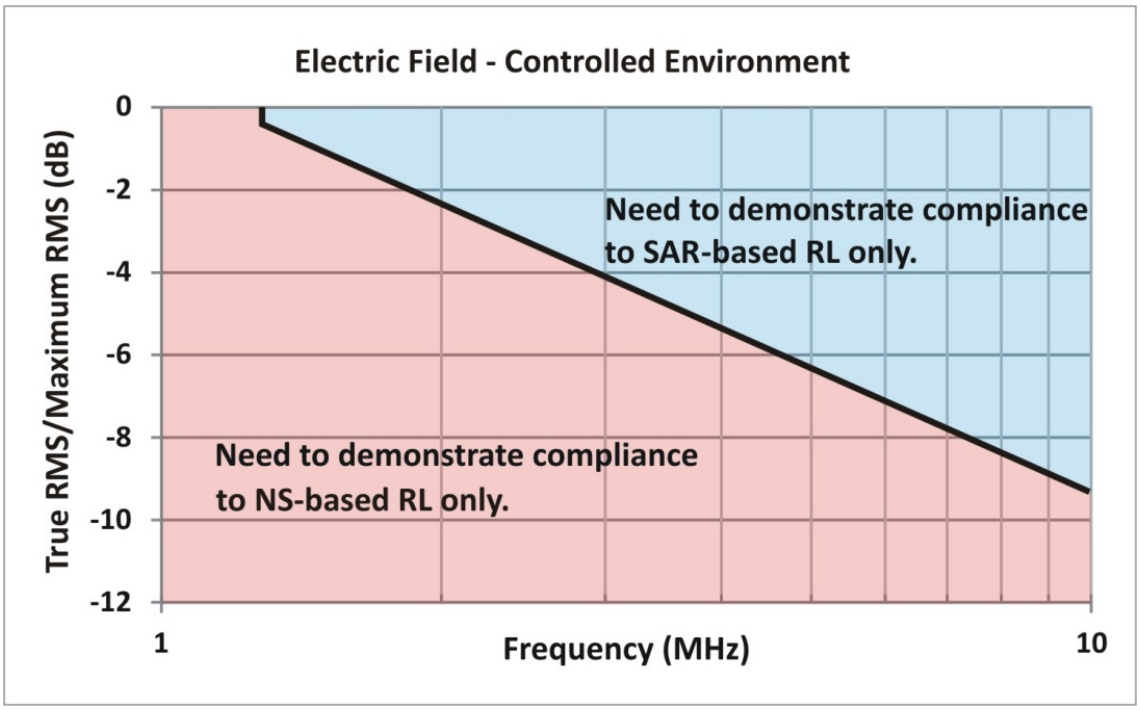

Figure A2. Criteria for assessment of electric field strength for comparison against the controlled electric field reference level.

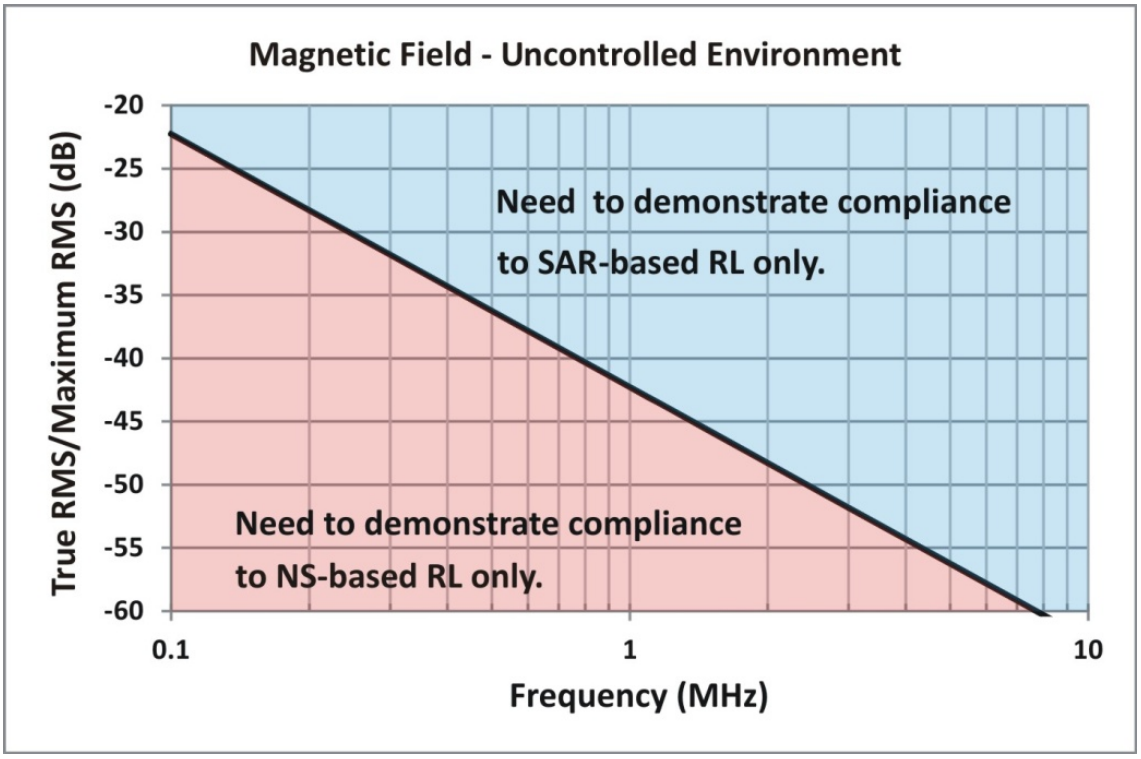

Figure A3. Criteria for assessment of magnetic field strength for comparison against the uncontrolled magnetic field reference level.

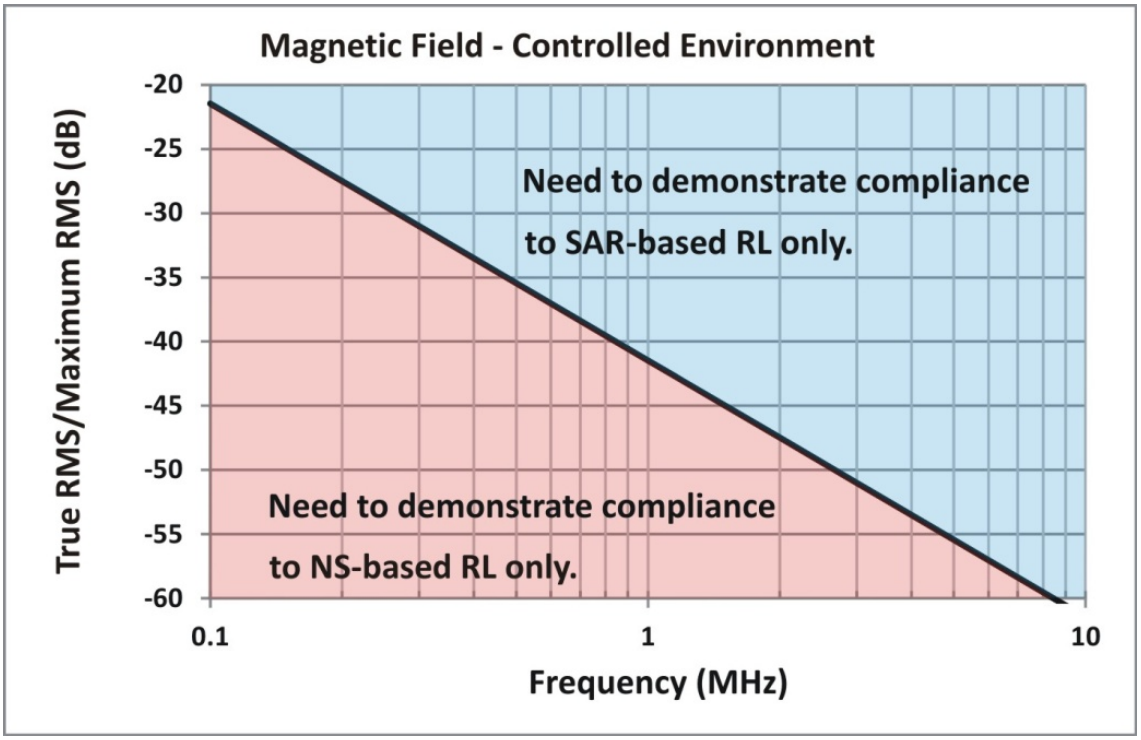

Figure A4. Criteria for assessment of magnetic field strength for comparison against the controlled magnetic field reference level.

Appendix B

Examples of Exposure Assessment for Multiple Sources

Example B-1: Multiple Sources with Mixed NS- and SAR-based RLs
A site has an AM broadcast transmitter at 1.6 MHz and an FM broadcast transmitter at 100 MHz. An assessment of compliance for the controlled environment is required. The controlled electric and magnetic field strength reference levels are given below:

f= 1.6 MHz : $E_{RL\text{-}NS}$ = 170 V/m, $E_{RL\text{-}SAR}$ = 152.6 V/m, $H_{RL\text{-}NS}$ = 180 A/m, $H_{RL\text{-}SAR}$ = 1 A/m

f=100 MHz : $E_{RL\text{-}SAR}$ = 49.3 V/m, $H_{RL\text{-}SAR}$ = 0.131 A/m, $W_{RL\text{-}SAR}$ = 6.46 W/m^2

Measurements of the 1.6 MHz AM envelope waveform using a spectrum analyzer resulted in a ratio of True RMS to Maximum RMS (T/M) of 0.5 or -6 dB. If the compliance of the AM source were being investigated alone, only Maximum RMS electric field strength and True RMS magnetic field strength assessments would be required (refer to Figures A2 and A4 in Appendix A). Compliance of these two quantities would ensure compliance to the remaining ones. However, because the AM field strengths will contribute to the overall WBA-SAR, their contribution to the SAR-based comparison conditions must be accounted for.

Using specific instruments for the AM band, spatially-averaged measurements of Maximum RMS electric field strength and True RMS magnetic field strength were carried out for the AM source. The spatial averaging scheme for both sources is the vertical line average and the surveyed location is in the far-field region of the FM transmitters' antenna and in the near-field of the AM transmitter's antenna. The spatially-averaged True RMS electric field strength and Maximum RMS magnetic field strength in the AM band were estimated from calculations using the previously measured T/M ratio. In addition, spatially-averaged measurements of the power density of the FM source were taken.

The measured data and calculated data (i.e. $E_{TrueRMS}$ and H_{MaxRMS} at 1.6 MHz) is given in the following table:

Table B-1. Data used for computing the multiple source comparison criteria for Example B-1.

Frequency (MHz)	Spatially-averaged E_{MaxRMS} (V/m)	Spatially-averaged $E_{TrueRMS}$ (V/m)	Spatially-averaged H_{MaxRMS} (A/m)	Spatially-averaged $H_{TrueRMS}$ (A/m)	Spatially-averaged S_{ave} (W/m^2)
1.6	140	70	1.8	0.9	-
100	-	-	-	-	5.0

From inspection of the table, it can be seen that the site is in compliance for NS-based reference levels.

The two SAR-based comparison criteria are composed of: 1) the electric field strength at 1.6 MHz and the power density at 100 MHz and 2) the magnetic field strength at 1.6 MHz and the power density at 100 MHz.

E-field (1.6 MHz) & PD (100 MHz) : $(70/152.6)^2 + (5.0/6.46) = 0.98$

H-field (1.6 MHz) & PD (100 MHz) : $(0.9/1.0)^2 + (5.0/6.46) = 1.58$

For compliance to the SAR-based reference levels, both conditions should be less than unity. It can be seen that the extra contribution of the magnetic field strength at 1.6 MHz has caused this location to be out of compliance to the reference levels. However, if it can be shown through electromagnetic simulation or other means that the SAR-based basic restriction is respected, then the location can be considered as being compliant.

Example B-2: Induced Current and Multiple Sources with NS- and SAR-based RLs
A site has two sources, one at 0.1 MHz and the other at 1 MHz. Electric field strengths at both frequencies were above the recommended thresholds for requiring induced current measurement (electric field strength equal to 25% of the reference level) but below the reference levels. A determination of compliance to the controlled environment reference levels is to be made. The reference levels for induced current are:

f=0.1 MHz $I_{RL\text{-}NS}$ = 22.5 mA (single foot) or 45 mA (both feet).

f=1.0 MHz $I_{RL\text{-}SAR}$ = 90 mA (single foot) or 180 mA (both feet)

Since there is no mixing of NS- and SAR-based reference levels for induced current, it is only necessary to assess the Maximum RMS current at 0.1 MHz and the True RMS current at 1.0 MHz.

A measurement of the induced currents through both feet was made and results given in the table.

Table B-2. Measured values of induced current through both feet for Example B-2.

Frequency (MHz)	$I_{TrueRMS}$ (mA)	I_{MaxRMS} (mA)
0.1	-	44.0
1.0	179.0	-

Individually, each frequency component of induced current is marginally compliant to its respective reference level. Jointly, they are also compliant since the two comparison criteria for this case each have only one exposure fraction (since there are no overlapping NS- and SAR-based reference levels for induced current).

Example B-3: Multiple Sources with Mixed E, H and Power Density Measurements

Assume that a person, authorized to work in a controlled environment, is exposed to RF fields at four different frequencies. Exposure measurements were performed, which were time and spatially averaged, producing the following conditions:

Source 1: Electric field (True RMS): 10.0 V/m at 15 MHz
Magnetic field (True RMS): 0.06 A/m at 15 MHz

Source 2: Magnetic field (True RMS): 0.1 A/m at 27 MHz
Source 3: Electric field (True RMS): 30 V/m at 915 MHz
Source 4: Power density (time-averaged): 20 W/m^2 at 10 000 MHz

Since all sources have frequencies above 10 MHz, only SAR-based reference levels apply. Because both E and H were measured for Source 1, the two separate Comparison Criteria, (4-4) and (4-5) should be tested. (Note that it is not indicated whether the measurements were taken in the near- or far-field, the comparison criteria are calculated in the same way, regardless.)

The exposure fractions for the four sources are given as follows (reference levels are found in Table 6 of SC6-2015):

Source 1: $(E_{TRMS}/E_{RL})^2 = (10.0/61.4)^2$ for 15 MHz (in the frequency band 10 - 20 MHz)
$(H_{TRMS}/H_{RL})^2 = (0.06/0.163)^2$ for 15 MHz (in the frequency band 10 - 20 MHz)

Source 2: $(H_{TRMS}/H_{RL})^2 = (0.1/0.151)^2$ for 27 MHz (in the frequency band 20 - 48 MHz)

Source 3: $(E_{TRMS}/E_{RL})^2 = (30/85.8)^2$ for 915 MHz (in the frequency band 0.10 - 6 GHz)

Source 4: $(S_{ave}/S_{RL}) = 20/50$ for 10 GHz (in the frequency band 6 - 15 GHz).

The summation for the comparison criterion in (4-4) is:

$$(10.0/61.4)^2 + (0.1/0.151)^2 + (30/85.8)^2 + 20/50 = 0.99$$

The summation for the comparison criterion in (4-5) is:

$$(0.06/0.163)^2 + (0.1/0.151)^2 + (30/85.8)^2 + 20/50 = 1.10$$

Both criteria must be satisfied for a state of compliance to exist, however the summation in (4-5) exceeds unity and therefore, the combined field strengths and power density from the four sources do not conform to the reference levels specified in SC6-2015, Section 2.2.

Appendix C

Examples of Exposure Assessment Using Computation and an Example of 6-minute Time Averaging

Example C-1: Calculation of minimum distance where exposures fall within the limits.

A parabolic antenna (0.5 m diameter), operating at 1.2 GHz (1200 MHz) with an EIRP of 50 W is to be installed in an area accessible to the general public (uncontrolled environment). What is the minimum distance from the antenna where the exposure does not exceed the limits specified in SC6-2015, Section 2 for uncontrolled environments?

Step 1. Calculate the maximum power density exposure limit for uncontrolled environments from SC6-2015, Section 2.2.2 (Table 5):

$$S_{limit} = 0.02619\, f^{0.6834} = 0.02619(1200)^{0.6834} = 3.33 \text{ W/m}^2$$

Step 2. Calculate the minimum distance by rearranging Equation 5-6 to solve for the distance from the antenna r :

$$\begin{aligned} r_{min} &= [EIRP/(4\pi S_{limit})]^{0.5} \\ &= [50.0/(4.0 \text{ x } 3.14159 \text{ x } 3.33)]^{0.5} \\ &= 1.09 \text{ m} \end{aligned}$$

Step 3. Check to make sure that the minimum distance calculated above is in the far field zone (where Formula 5-6 is valid):

First calculate the wavelength (λ):

$$\lambda = 300 / f \quad (f \text{ in MHz}) = 300 / 1200 = 0.25 \text{ m}$$

Since the antenna diameter (0.5 m) is larger than the wavelength (0.25 m), then it should be considered as a large antenna. Thus, the beginning of the far field region should be calculated using Formula 5-5, where the parameter D is taken to be the diameter of the dish:

$$R_f = 0.5\, D^2 / \lambda = 0.5 \text{ x } (0.5)^2 / 0.25 = 0.5 \text{ m}$$

Since the minimum distance (1.09 m, as calculated above) can be considered to be in the far-field zone of the antenna (as calculated above), the basis for the calculation is valid. Therefore, members of the general public should not stand closer than 1.09 m directly in front of the antenna.

Example C-2: Estimation of the average power density at a distance of 450 m in front of the antenna of a radar system with the following characteristics:

Operating frequency (f): 10 GHz (gigahertz)
Transmitter peak power (P_p): 1 MW (megawatts)
Pulse duration (T): 3 μs (microseconds)
Pulse repetition frequency (f_p): 400 Hz
Antenna dimension (D): 5 m in diameter (parabolic dish)
Antenna efficiency (ε): 70%

Steps of calculation:

Step 1. The wavelength, $\lambda = 300/f$ (f in MHz) = 0.03 m

Step 2. The distance where the far-field region begins,

$$R_f = 0.5\ D^2/\lambda = 417 \text{ m.}$$

The 450 m location is in the far-field region.

Step 3. The antenna physical aperture area, $A = \pi\ D^2/4 = 19.63\ m^2$

Step 4. The antenna gain, $G = 4\pi\varepsilon\ A/\lambda^2 = 191{,}800$

Step 5. The duty factor, $F = Tf_p = 1.2 \times 10^{-3}$

Step 6. The average power, $P_a = P_p\ F = 1.2$ kW.
This is the net power delivered to the antenna, P_T .

Step 7. At the distance of 450 m, the average power density,

$$S_m = P_T G/(4\pi r^2) = 90.5\ W/m^2$$

Exposure of a person at this distance should be avoided or limited to a short duration since the power density exceeds the limits (50 W/m^2 for controlled environments, 10 W/m^2 for uncontrolled environments).

Example C-3: Determine the effective power density at 10 m and 30 m from a scanning antenna in motion, given the following parameters:

Power density at 10 m with the antenna stationary: 100 W/m^2
Power density at 30 m with the antenna stationary: 20 W/m^2
The distance where the far-field region begins: 20 m
Antenna rotation (φ): full (360° or 2π radians)
Antenna aperture dimensions (a, b): 2 m wide, 10.16 cm high
Antenna beam widths: 1.23^o horizontal, 25° vertical

Steps of calculation:

Step 1. The 10 m location is in the near-field region. At this location,
The circumference of the antenna scan, $R_\varphi = 2\pi \times 10$ m
The rotational reduction factor, $K = a/R_\varphi = 2/(2\pi \times 10) = 0.1/\pi$
The effective power density when the antenna is in scanning mode,

$S_m = KS_s = (0.1/\pi)(100) = 3.2\ W/m^2$

Step 2. The rotational reduction factor is different, since the 30 m location is in the far-field,
K = 3 dB beamwidth / scan angle = $1.23^o/360^o$
The effective power density when the antenna is in scanning mode is:
$S_m = KS_s = (1.23/360)(20) = 0.07\ W/m^2$

Example C-4: Six-minute time averaging.
The area in front of an emitter must be transited by designated RF workers in the course of their duties at a facility. Signage and training in mitigating exposure is to be designed to ensure the safety of the employees. The information to be relayed is the maximum allowable time to be taken to transit in front of the emitter. Measurements have shown that the spatially-averaged power density in the area to be transited is 4 times the controlled environment reference level. Determine the maximum allowable transit time.

Recall that the time average for power density is the arithmetic mean. The formula for the 6-minute time-average power density, S_{6min}, can be written as:

$$S_{6\text{min}} = \frac{1}{6}\sum_{i=1}^{6} S_i$$

where S_i is the time-averaged power density during the ith minute. Let T represent the transit time in minutes. The individual power density time samples, S_i, are all equal and are denoted by the constant power density, S. Dividing both sides by the power density reference level, S_{RL}, the formula can be written as an exposure fraction:

$$\frac{S_{6\text{min}}}{S_{RL}} = \frac{1}{6}\left(T\frac{S}{S_{RL}}\right) \leq 1$$

The inequality (≤ 1) occurs because the 6-minute-averaged power density must be less than or equal to the reference level. By substituting $S/S_{RL} = 4$ and solving for T, we obtain the result that $T \leq 1.5$ minutes. Therefore, the signage should indicate, and the RF workers should be instructed, that a transit time of no greater than 1.5 minutes is allowed.

Appendix D

Spatial Averaging with Multiple Sources.

Spatial averaging may be required in areas where significant contributions to the total exposure level are from two or more sources. In this case, each spatial sample should be composed of weighted contributions at each frequency and combined together in the same way as done in the comparison criteria of Section 4.2.4. The weighting is carried out by dividing the field strength at each frequency by the corresponding reference level. The resulting spatial sample represents a "fraction of the reference level" in the same way that a reading from a frequency-shaped field probe represents the "percent of reference level".

Once all spatial samples are determined they can then be averaged according to the formulas (4-10) to (4-12) of Section 4.2.5 depending on the type of field quantity measured (NS- or SAR-based). The remainder of this appendix will give explicit procedures for calculating spatial averages for the most important cases.

To begin, assume only power density measurements are performed where there are N spatial samples numbered i=1 to i=N and there are M frequencies numbered j=1 to j=M. The power density comparison criterion for the ith spatial sample, denoted as $C_{S,i} \leq 1$, is found from (4-4) or (4-5) in Section 4.2.4, where:

$$C_{S,i} = \sum_{j=1}^{M} \frac{S_{ave,j}}{S_{RL,j}} \qquad (D-1)$$

The quantity $C_{S,i}$ is the "fraction of the reference level" power density at the ith spatial sample location. The power density $S_{ave,\,j}$ is the measured time-averaged power density at the jth frequency while $S_{RL,j}$ is the reference level power density at the jth frequency. The summation is taken over the M frequencies corresponding to $f_1 \ldots f_j \ldots f_M$.

Since the spatial average of power density is the arithmetic mean of the samples (formula 4-12), the "fractions of the reference level" at all N sampling positions are averaged and the result compared to unity to determine compliance. This can be expressed as:

$$\frac{1}{N} \sum_{i=1}^{N} C_{S,i} \leq 1 \qquad (D-2)$$

If the average of the "fractions of the reference level" is less than unity, the location can be considered to be in compliance to the SC6-2015 limits. This is very similar to the single frequency case in (4-12) of Section 4.2.5 where both sides of (4-12) have been divided by the term S_{RL} and the equal sign replaced by the inequality.

The concept of "fraction of the reference level" and use of (D-2) can be extended for other field quantities. In this case, (D-2) can be generalized to:

$$\frac{1}{N}\sum_{i=1}^{N} C_i \leq 1 \qquad (D-3)$$

where C_i is the fraction of the reference level pertaining to any type or mix of exposure quantities (i.e. electric and magnetic field strength, power density) at the ith spatial sample location.

For homogeneous (i.e. single type of field quantity) assessments of field strength against SAR-based reference levels, the fraction of the reference level can be written as:

$$C_i = \sum_{j=1}^{M}\left(\frac{E_{TRMS,j}}{E_{RL-SAR}}\right)^2 \quad \text{or} \quad C_i = \sum_{j=1}^{M}\left(\frac{H_{TRMS,j}}{H_{RL-SAR}}\right)^2 \qquad (D-4)$$

while for homogeneous assessments of field strength against NS-based reference levels, the fraction of the reference level can be written as:

$$C_i = \sum_{j=1}^{M}\left(\frac{E_{MaxRMS,j}}{E_{RL-NS}}\right) \quad \text{or} \quad C_i = \sum_{j=1}^{M}\left(\frac{H_{MaxRMS,j}}{H_{RL-NS}}\right) \qquad (D-5)$$

For heterogeneous (i.e. mixed) assessments of field strength and/or power density, the comparison criteria (4-4) to (4-9) in Section 4.2.4 can be used to guide in calculating the fraction of the reference level for each spatial sample. Once calculated, the fractions of the reference level are averaged and compared to unity as in (D-3).

As pointed out in Case 1 of Section 4.2.4, (SAR and power density-based reference levels apply exclusively), if a set of sources exist where both the E-field and the H-field have been measured, then the correct "fraction of the reference level" to use in (D-3) is the larger of those calculated using (4-4) and (4-5). Similarly, for Case 2 (NS-based reference levels apply exclusively), the appropriate "fraction of the reference level" to use is the larger of those calculated using (4-7) and (4-8). For Case 3 where mixed NS- and SAR-based reference levels apply, the appropriate "fraction of the reference level" to use is the larger of those calculated using (4-4), (4-5), (4-7) and (4-8), where applicable.

Example D-1

A site having three sources at 27 MHz, 100 MHz and 2400 MHz was surveyed for compliance to the controlled environment limits. At a point located in the far-field of all three sources, spatial averaging measurements were conducted for a 5 pt. line average extending over the heights from 0.2m from the ground to 1.8m. Electric field strength (True RMS) measurements were made of the emissions at 27 and 100 MHz while time-averaged power density measurements were made of the emissions at 2400 MHz. The measured data are given in Table D-1 along with the calculated "fraction of the reference level" at each spatial sample location and the resulting spatially-averaged, fraction of the reference level.

Table D-1. Measured data for Example D-1

	27 MHz	**100 MHz**	**2400 MHz**	
Measurement Type	Electric field Strength (V/m)	Electric field strength (V/m)	Power Density (W/m^2)	
Reference level	56.9	49.3	31.6	
Spatial Sample	Measured values			Fraction of the reference level
1	55	5	2	$(55/56.9)^2+(5/49.3)^2+(2/31.6) = 1.01$
2	36	10	9	$(36/56.9)^2+(10/49.3)^2+(9/31.6) = 0.73$
3	20	47	14	$(20/56.9)^2+(47/49.3)^2+(14/31.6)=1.48$
4	11	10	21	$(11/56.9)^2+(10/49.3)^2+(21/31.6)=0.74$
5	1	2	32	$(1/56.9)^2+(2/49.3)^2+(32/31.6) = 1.01$
Spatially-averaged fraction of the reference level:				(1.01+0.73+1.48+0.74+1.01)/5= 0.99

From observation of Table D-1, it can be seen that the surveyed location is compliant with the limits in SC6-2015.

If a meter with a frequency-shaped field probe had been used to take the same measurements and it displayed values in units of “percent of reference level”, the readings at the 5 sampled points would have been: 101%, 73%, 148%, 74% and 101%. The spatial average of these 5 values would be the arithmetic mean, which would be the value: 99% of the reference level. (Note: since for SAR-based reference levels, the basic restriction quantity is related to units of power, the percent of reference level for field strength is always in terms of the squared value.)