Minutes – Executive Policy Committee – October 21, 2025

Report – Standing Policy Committee on Property and Development – October 9, 2025

Item No. 10 Subdivision and Rezoning – 678 McGregor Street (Mynarski Ward) File DASZ 6/2025 [c/r DAV 140993/2025D]

EXECUTIVE POLICY COMMITTEE RECOMMENDATION:

The Executive Policy Committee concurred in the recommendation of the Standing Policy Committee on Property and Development and submitted the following to Council:

1. That the subdivision proposed under Development Application No. DASZ 6/2025 be approved for preparation as a plan of subdivision (the "Plan") by a Manitoba Land Surveyor for registration in the Winnipeg Land Titles Office in accordance with the proposed by-law attached as Appendix "A" to this report and as shown on the map dated September 22, 2025 and attached as Schedule "B" to this report, with such minor changes as may be required.

2. That the Winnipeg Zoning By-law No. 200/2006 be amended by rezoning the subject land to a "C2 MATURE COMMUNITIES PDO-1" Commercial Community District, in accordance with the proposed by-law attached as Appendix "A" to this report and as shown on the map dated September 22, 2025, and attached as Schedule "B" to this report, subject to the following conditions:

    A. That the developer enter into a Zoning Agreement with the City pursuant to subsection 240(1) of The City of Winnipeg Charter in accordance with the following:

        i. The Owner must submit plans showing the location and design of any and all proposed:

            a. buildings
            b. accessory parking areas
            c. private approaches
            d. garbage enclosures
            e. fencing
            f. landscaping; and
            g. free-standing signage

Report – Standing Policy Committee on Property and Development – October 9, 2025

EXECUTIVE POLICY COMMITTEE RECOMMENDATION (continued):

on the Owner's Land ("Works") to the City for approval by the Director of Planning, Property and Development ("Director") and the Lord Selkirk – West Kildonan Community Committee prior to the issuance of any building or development permit, and thereafter must construct the Works in substantial conformance with the approved plans and maintain the Works to the satisfaction of the Director.

B. That the City enter into, execute and deliver with the developer a Zoning Agreement in accordance with recommendation 2.A. and such other agreements as determined necessary by the City Solicitor/Director of Legal Services to implement the intent of the foregoing (the "Ancillary Agreements").

C. That authority be delegated to the Director of Planning, Property and Development (the "Director") to negotiate and approve the terms and conditions of the Zoning Agreement, and any Ancillary Agreements, in accordance with this report and such other terms and conditions determined necessary by the City Solicitor/Director of Legal Services to protect the interests of the City.

3. That, in lieu of the dedication of land, the developer shall provide a cash payment representing 10% of the Planned Area value of Development Application No. DASZ 6/2025 (the "Dedication Fee"), as determined by the Director of Planning, Property and Development.

4. That, upon instruction from the Director of Planning, Property and Development, the Director of Legal Services/City Solicitor prepare a by-law in accordance with recommendations 1 and 2 (the "By-law") and bring same directly to Council by way of communication for first reading.

5. That upon instruction from the Director of Planning, Property and Development that the Developer has submitted the Plan in accordance with recommendation 1 and has paid the Dedication Fee and all other associated ancillary fees (the "Fees"), and subject to s. 236.1 of The City of Winnipeg Charter, the Director of Legal Services/City Solicitor be directed to return the By-law directly to Council by way of communication for second and third reading.

Report – Standing Policy Committee on Property and Development – October 9, 2025

EXECUTIVE POLICY COMMITTEE RECOMMENDATION (continued):

6. That Development Application No. DASZ 6/2025 will be deemed to be concluded and all approvals in connection with same will expire if the developer has not submitted the Plan and paid the Fees within 2 years following the date on which Council gives first reading to the By-law, unless the developer applies for an extension of time before the expiration of that 2 year period and Council approves the extension.

7. That the subdivision section of the By-law will come into force when the Plan is registered in the Winnipeg Land Titles Office.

8. That the zoning section of the By-law will come into force when the Zoning Agreement is registered in the Winnipeg Land Titles Office by way of caveat against the lands described therein.

9. That the By-law will be repealed without coming into force 1 year following the date it is enacted if the Plan and the Zoning Agreement are not registered in accordance with recommendations 6 and 7, unless the developer applies for an extension of time before the expiration of that 1-year period and Council approves the extension.

10. That Development Application No. DASZ 6/2025 will be deemed to be concluded and all approvals in connection with same will expire if the developer fails to secure all necessary Plan approval signatures on behalf of the City within 1 year following the date on which the By-law is enacted, unless the developer applies for an extension of time before the expiration of that 1 year period and Council approves the extension.

11. That the Proper Officers of the City be authorized to do all things necessary to implement the intent of the foregoing.

12. That the variance order for DAV 25-140993/D shall come into force and effect upon the coming into force and effect of the zoning by-law for the subject land under File DASZ 6/2025.

Report – Standing Policy Committee on Property and Development – October 9, 2025

DECISION MAKING HISTORY:

Moved by Councillor Duncan,

That the recommendation of the Standing Policy Committee on Property and Development be concurred in and forwarded to Council.

Carried

STANDING COMMITTEE RECOMMENDATION:

On October 9, 2025, the Standing Policy Committee on Property and Development concurred in the recommendation of the Lord Selkirk-West Kildonan Community Committee and submitted the matter to the Executive Policy Committee and Council.

COMMUNITY COMMITTEE RECOMMENDATION:

On October 2, 2025, the Lord Selkirk-West Kildonan Community Committee concurred in the recommendation of the Winnipeg Public Service, with the following amendment:

- In Recommendation 2.A.i. add the words "and the Lord Selkirk – West Kildonan Community Committee" immediately after "Director of Planning, Property and Development ("Director")

and forwarded the matter to the Standing Policy Committee on Property and Development.

PUBLIC HEARING SUMMARY

File: DASZ 6/2025

Before: Lord Selkirk-West Kildonan Community Committee
Councillor Santos, Chairperson
Councillor Eadie

Public Hearing: October 2, 2025
Council Building, 510 Main Street

Applicant: KBS Design and Consulting (Kim Boparai-Sran)

Subject:

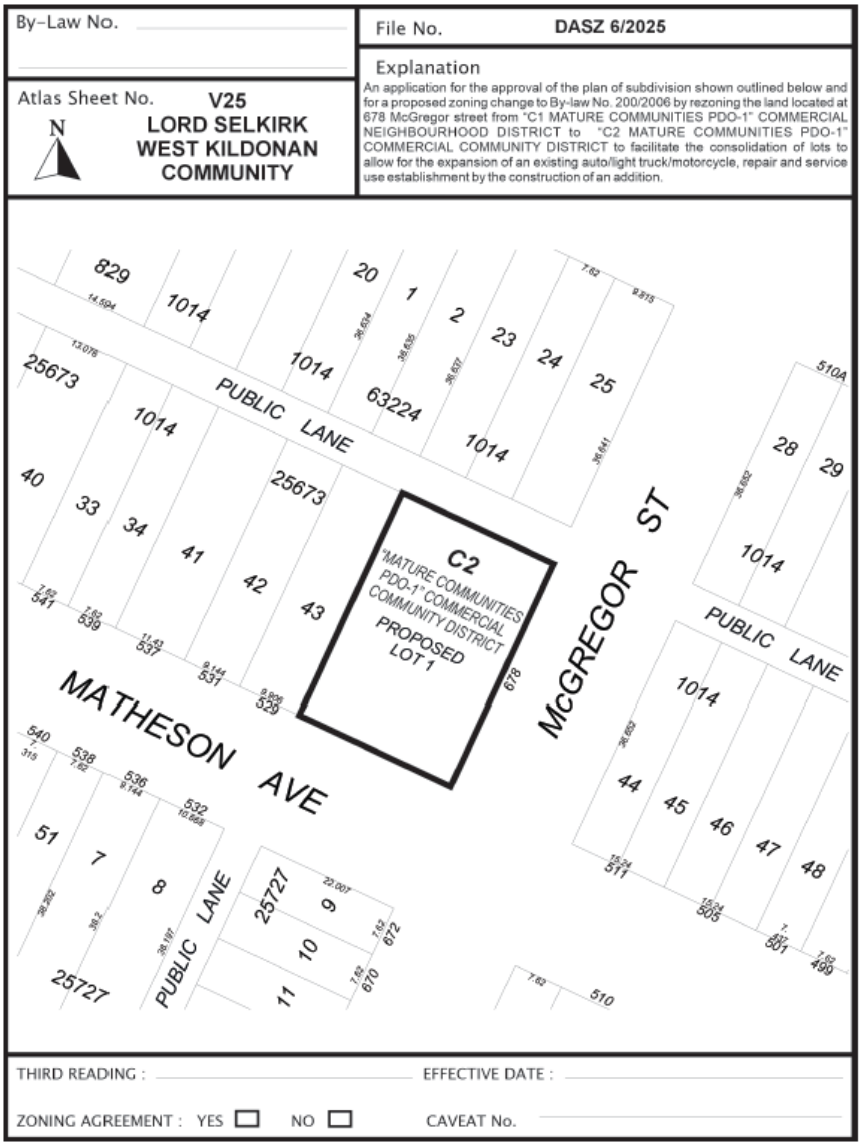

Premises Affected: 678 McGregor Street

For submission to: The Standing Policy Committee on Property and Development

Prepared by: P. Prinsloo, Senior Committee Clerk
Lord Selkirk-West Kildonan Community Committee

Report date: October 2, 2025

Community Committee Recommendation:

On October 2, 2025, the Lord Selkirk-West Kildonan Community Committee concurred in the recommendation of the Winnipeg Public Service, as amended, and recommended to the Standing Policy Committee on Property and Development:

1. That the subdivision proposed under Development Application No. DASZ 6/2025 be approved for preparation as a plan of subdivision (the "Plan") by a Manitoba Land Surveyor for registration in the Winnipeg Land Titles Office in accordance with the proposed by-law attached as Appendix "A" to this report and as shown on the map dated September 22, 2025 and attached as Schedule "B" to this report, with such minor changes as may be required.

2. That the Winnipeg Zoning By-law No. 200/2006 be amended by rezoning the subject land to a "C2 MATURE COMMUNITIES PDO-1" Commercial Community District, in accordance with the proposed by-law attached as Appendix "A" to this report and as shown on the map dated September 22, 2025, and attached as Schedule "B" to this report, subject to the following conditions:

    A. That the developer enter into a Zoning Agreement with the City pursuant to subsection 240(1) of The City of Winnipeg Charter in accordance with the following:

        i. The Owner must submit plans showing the location and design of any and all proposed:

            a. buildings
            b. accessory parking areas
            c. private approaches
            d. garbage enclosures
            e. fencing
            f. landscaping; and
            g. free-standing signage

on the Owner's Land ("Works") to the City for approval by the Director of Planning, Property and Development ("Director") ***and the Lord Selkirk – West Kildonan Community Committee*** prior to the issuance of any building or development permit, and thereafter must construct the Works in substantial conformance with the approved plans and maintain the Works to the satisfaction of the Director.

B. That the City enter into, execute and deliver with the developer a Zoning Agreement in accordance with recommendation 2.A. and such other agreements as determined necessary by the City Solicitor/Director of Legal Services to implement the intent of the foregoing (the "Ancillary Agreements").

C. That authority be delegated to the Director of Planning, Property and Development (the "Director") to negotiate and approve the terms and conditions of the Zoning Agreement, and any Ancillary Agreements, in accordance with this report and such other terms and conditions determined necessary by the City Solicitor/Director of Legal Services to protect the interests of the City.

3. That, in lieu of the dedication of land, the developer shall provide a cash payment representing 10% of the Planned Area value of Development Application No. DASZ 6/2025 (the "Dedication Fee"), as determined by the Director of Planning, Property and Development.

4. That, upon instruction from the Director of Planning, Property and Development, the Director of Legal Services/City Solicitor prepare a by-law in accordance with recommendations 1 and 2 (the "By-law") and bring same directly to Council by way of communication for first reading.

5. That upon instruction from the Director of Planning, Property and Development that the Developer has submitted the Plan in accordance with recommendation 1 and has paid the Dedication Fee and all other associated ancillary fees (the "Fees"), and subject to s. 236.1 of The City of Winnipeg Charter, the Director of Legal Services/City Solicitor be directed to return the By-law directly to Council by way of communication for second and third reading.

6. That Development Application No. DASZ 6/2025 will be deemed to be concluded and all approvals in connection with same will expire if the developer has not submitted the Plan and paid the Fees within 2 years following the date on which Council gives first reading to the By-law, unless the developer applies for an extension of time before the expiration of that 2 year period and Council approves the extension.

7. That the subdivision section of the By-law will come into force when the Plan is registered in the Winnipeg Land Titles Office.

8. That the zoning section of the By-law will come into force when the Zoning Agreement is registered in the Winnipeg Land Titles Office by way of caveat against the lands described therein.

9. That the By-law will be repealed without coming into force 1 year following the date it is enacted if the Plan and the Zoning Agreement are not registered in accordance with recommendations 6 and 7, unless the developer applies for an extension of time before the expiration of that 1 year period and Council approves the extension.

10. That Development Application No. DASZ 6/2025 will be deemed to be concluded and all approvals in connection with same will expire if the developer fails to secure all necessary Plan approval signatures on behalf of the City within 1 year following the date on which the By-law is enacted, unless the developer applies for an extension of time before the expiration of that 1 year period and Council approves the extension.

11. That the proper officers of the City be authorized to do all things necessary to implement the intent of the foregoing.

12. That the variance order for DAV 25-140993/D shall come into force and effect upon the coming into force and effect of the zoning by-law for the subject land under File DASZ 6/2025.

Note: The wording in bold and italics denotes amendments made by the Community Committee.

The Lord Selkirk-West Kildonan Community Committee provided the following supporting reasons for its recommendation:

1. Business has existed frankly when there weren't as many cars on the streets back in the 60s and 70s, and it has always been a commercial operation working on cars and actually getting gas at one point, long gone there, and I mean this business that is in there now they are operating under their increasing C1 to a C2 which means their having a successful business and it is important for them to have the third bay that will move cars in and out of that lot faster because they are able to work on obviously they have a certain level of customers and this will help them deal with it I believe.

2. Closing off the driveway on McGregor is a good idea there will be a little bit of an approach from the back lane for front street, from Mathieson, considered to be the front street, and you know we have parking rules on streets that say you only park a certain distance from an intersection for vehicle control signage and so on, those have been established, those rules enough distance so that people can see to turn on and off various streets. In this case it is not like a 8 foot tall bush that is over grown and blocking the view or even a tree that is substantial enough to cause people to not be able to see, there are similar circumstances happening all along Main Street in the Mynarski Ward so I mean I appreciate the concern but the parking is allowed on McGregor again, it has to be a certain distance away from the intersection, so those concerns, I am hoping to see, in bringing back a plan, I'm hoping to see that in that parking plan where the employees park. The use of the parking spaces on the lot for vehicles to be sold, I don't think that will be appropriate so that's what I would like to see.

Objections under the Charter:	Total number of valid objections as per section 125(2) – 1 In accordance with section 236.1(1), the threshold for sufficient objection has not been met.
Exhibits Filed:	1. Application dated July 24, 2025 2. Notification of Public Hearing dated July 30, 2025 3. Manitoba Status of Title 3191156/1 4. Letter of authorization dated June 6, 2025 from Satpal Saggu for 10062619 Manitoba Ltd. to Kim Boparai-Sran for KBS Design and Consulting Ltd. 5. Surveyor's Building Location Certificate and sketch dated December 22, 1989 6. Plans (4 pages) 7. Report from the Urban Planning Division dated September 22, 2025 8. Inspection Report 9. Recording of Representations

REPRESENTATIONS:

In Support:

Kim Sran

In Opposition:

Fadia Dalank

For Information:

Nil

For the City:

S. Jerez, Planner, Planning, Property and Development Department

Exhibit “7” referred to in File DASZ 6/2025

ADMINISTRATIVE REPORT

Title: DASZ 6/2025 – 678 McGregor ST

Issue: An application for consideration at the Public Hearing to consolidate and rezone the subject site from a “C1” Commercial Neighbourhood District to a “C2 Mature Communities PDO-1” District.

Critical Path: Lord Selkirk - West Kildonan Community Committee → Standing Policy Committee on Property and Development, Heritage and Downtown Development → Executive Policy Committee → Council as per the Development Procedures By-law and *The City of Winnipeg Charter.*

AUTHORIZATION

Author	Department Head	CFO	CAO
S. Jerez, RPP MCIP	n/a	n/a	

RECOMMENDATIONS

1. That the subdivision proposed under Development Application No. DASZ 6/2025 be approved for preparation as a plan of subdivision (the “Plan”) by a Manitoba Land Surveyor for registration in the Winnipeg Land Titles Office in accordance with the proposed by-law attached as Appendix “A” to this report and as shown on the map dated September 22, 2025 and attached as Schedule “B” to this report, with such minor changes as may be required.
2. That the Winnipeg Zoning By-law No. 200/2006 be amended by rezoning the subject land to a “C2 MATURE COMMUNITIES PDO-1” Commercial Community District, in accordance with the proposed by-law attached as Appendix “A” to this report and as shown on the map dated September 22, 2025, and attached as Schedule “B” to this report, subject to the following conditions:
   A. That the developer enter into a Zoning Agreement with the City pursuant to subsection 240(1) of The City of Winnipeg Charter in accordance with the following:
      i. The Owner must submit plans showing the location and design of any and all proposed:

a) buildings;

b) accessory parking areas;

c) private approaches;

d) garbage enclosures;

e) fencing;

f) landscaping; and

g) free-standing signage

on the Owner's Land ("Works") to the City for approval by the Director of Planning, Property and Development ("Director") prior to the issuance of any building or development permit, and thereafter must construct the Works in substantial conformance with the approved plans and maintain the Works to the satisfaction of the Director.

B. That the City enter into, execute and deliver with the developer a Zoning Agreement in accordance with recommendation 2.A. and such other agreements as determined necessary by the City Solicitor/Director of Legal Services to implement the intent of the foregoing (the "Ancillary Agreements").

C. That authority be delegated to the Director of Planning, Property and Development (the "Director") to negotiate and approve the terms and conditions of the Zoning Agreement, and any Ancillary Agreements, in accordance with this report and such other terms and conditions determined necessary by the City Solicitor/Director of Legal Services to protect the interests of the City.

3. That, in lieu of the dedication of land, the developer shall provide a cash payment representing 10% of the Planned Area value of Development Application No. DASZ 6/2025 (the "Dedication Fee"), as determined by the Director of Planning, Property and Development.

4. That, upon instruction from the Director of Planning, Property and Development, the Director of Legal Services/City Solicitor prepare a by-law in accordance with recommendations 1 and 2 (the "By-law") and bring same directly to Council by way of communication for first reading.

5. That upon instruction from the Director of Planning, Property and Development that the Developer has submitted the Plan in accordance with recommendation 1 and has paid the Dedication Fee and all other associated ancillary fees (the "Fees"), and subject to s. 236.1 of The City of Winnipeg Charter, the Director of Legal Services/City Solicitor be directed to return the By-law directly to Council by way of communication for second and third reading.

6. That Development Application No. DASZ 6/2025 will be deemed to be concluded and all approvals in connection with same will expire if the developer has not submitted the Plan and paid the Fees within 2 years following the date on which Council gives first reading to the By-law, unless the developer applies for an extension of time before the expiration of that 2 year period and Council approves the extension.

7. That the subdivision section of the By-law will come into force when the Plan is registered in the Winnipeg Land Titles Office.

8. That the zoning section of the By-law will come into force when the Zoning Agreement is registered in the Winnipeg Land Titles Office by way of caveat against the lands described therein.

9. That the By-law will be repealed without coming into force 1 year following the date it is enacted if the Plan and the Zoning Agreement are not registered in accordance with recommendations 6 and 7, unless the developer applies for an extension of time before the expiration of that 1 year period and Council approves the extension.
10. That Development Application No. DASZ 6/2025 will be deemed to be concluded and all approvals in connection with same will expire if the developer fails to secure all necessary Plan approval signatures on behalf of the City within 1 year following the date on which the By-law is enacted, unless the developer applies for an extension of time before the expiration of that 1 year period and Council approves the extension.
11. That the proper officers of the City be authorized to do all things necessary to implement the intent of the foregoing.
12. That the variance order for DAV 25-140993/D shall come into force and effect upon the coming into force and effect of the zoning by-law for the subject land under File DASZ 6/2025.

REASON FOR THE REPORT

- The applicant intends to consolidate and rezone the site to bring the existing use into compliance and facilitate the expansion of the existing auto sales, repair and service uses.
- Rezoning applications require a Public Hearing as per the Development Procedures By-law and The City of Winnipeg Charter.
- The Report is being submitted for the Committee's consideration of the development application at the Public Hearing.

OURWINNIPEG 2045 POLICY ALIGNMENT

City Building Objective 1: Responsibly plan, prioritize and accommodate growth in areas that best support Complete Communities principles, to achieve this Plan's sustainable development goals. Facilitate growth and change strategically within Winnipeg's unique Transformative Areas and Established Neighbourhoods.

01-1a OurWinnipeg Approach to City Building: Promote compact urban form and manage the extension of municipal services for new growth. Support new developments that are contiguous with existing developments to minimize the spatial use of land and the extension of services.

WINNIPEG CLIMATE ACTION PLAN ALIGNMENT

Strategic Opportunity #4: Facilitate Compact, Complete Development and Increase Density.

SUBMITTED BY

Department	Planning, Property and Development
Division	Urban Planning & Design Division
Prepared by	S. Jerez, RPP MCIP
Date:	September 22, 2025
File No.	DASZ 6/2025

List of Schedules and Attachments

Schedule “A”	Planning Discussion.
Schedule “B”	File 6/2025**,** Lord Selkirk - West Kildonan Community Committee, dated September 22, 2025.
Appendix “A”	Proposed By-law
Appendix “B”	Report of the Administrative Coordinating group, RE: Proposed Subdivision and Rezoning of Land Located at 678 McGregor Street, dated September 17, 2025.

SCHEDULE 'A'

DATE:	September 22, 2025
FILE:	**DASZ 6/2025**
RELATED FILES:	DAV 25-160387\D
COMMUNITY:	Lord Selkirk-West Kildonan Community
NEIGHBOURHOOD #:	3.309 - Jefferson

SUBJECT: To subdivide and rezone the subject site from an from a "C1" Commercial Neighbourhood District to an "C2 Mature Communities PDO-1" District.

LOCATION: 678 McGregor Str**eet**

LEGAL DESCRIPTION: LOT 39/41 PLAN 1014 4 K



APPLICANT: Kim Boparai-Sran (KBS Design and Consulting)
85 Harrow St
Winnipeg, MB R3M 2X8

OWNERS: 10062619 MANITOBA LTD.
61 Cartesian Gate
Winnipeg, MB R2P 1W8

RECOMMENDATION: Approval with conditions

DISCUSSION

SITE DESCRIPTION

- The subject property is located on the west side of McGregor Street (an arterial road) at the northwest corner of the Matheson Avenue intersection, in the Jefferson neighbourhood of the Mynarski ward.
- The subject site is 9,859 square feet in area and is currently occupied by a commercial use (automobile repair and sales).
- The subject site is accessed via approaches from McGregor Street, Matheson Avenue and from the north side public lane.
- Under the *Complete Communities Direction Strategy 2.0*, the site is within the Established Neighbourhoods – Mature Communities policy area. The property is currently zoned a "C1" Commercial Neighbourhood District.

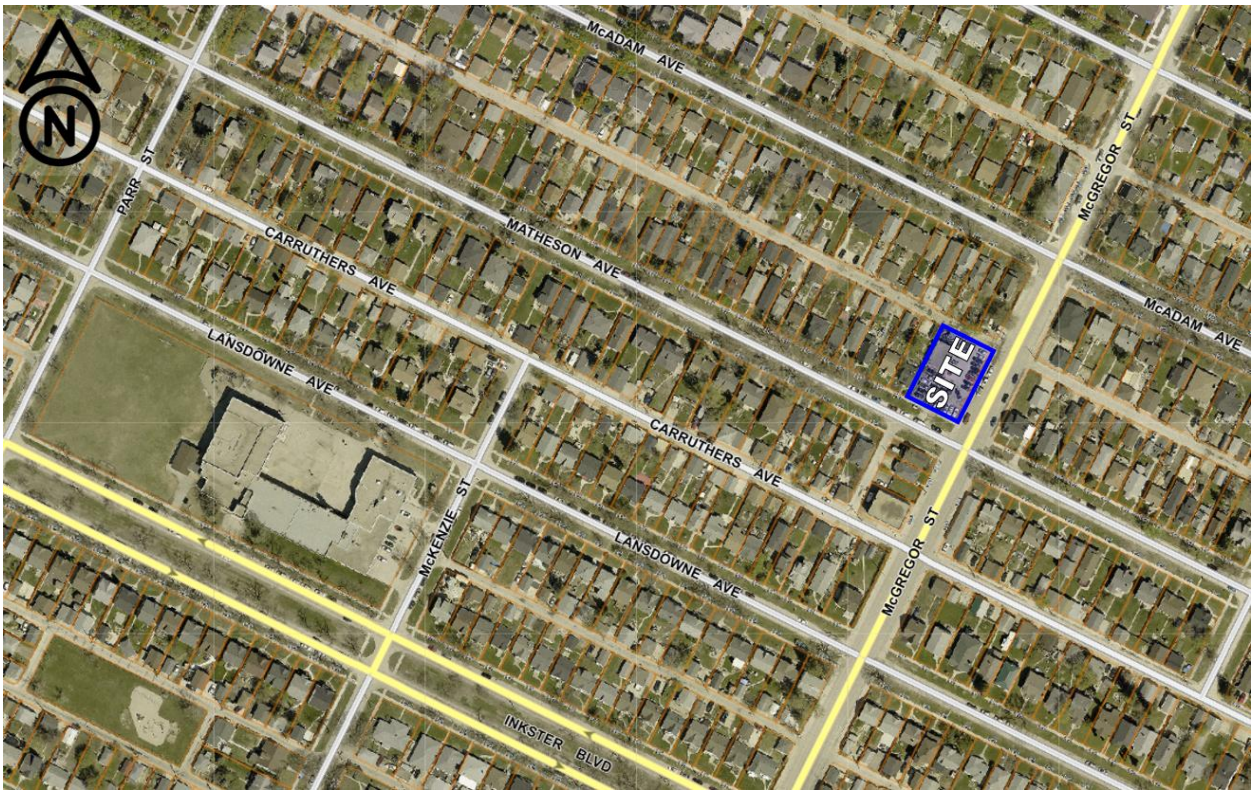

Figure 1: Aerial photo of subject site and surrounding area *(flown 2024)*

SURROUNDING LAND USE AND ZONING (See Figure 2)

North: Public lane, then single family residential uses with frontage on McAdam Avenue zoned "R1-M" Residential Single-family (Medium).

South: Matheson Avenue, then single family residential uses zoned "R1-M" Residential Single-family (Medium).

East: McGregor Street, then single-family residential uses zoned "R1-M" Residential Single-family (Small).

West: Single-family dwellings zoned "R1-M" Residential Single-family.

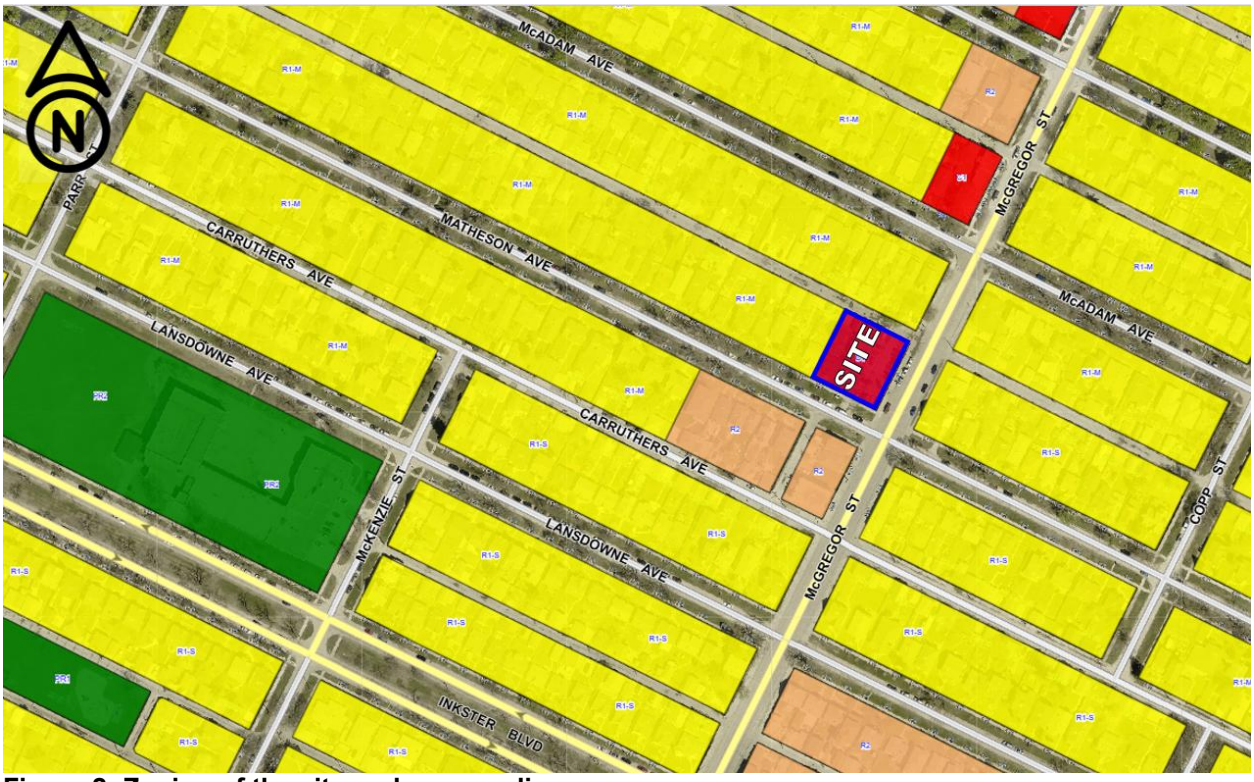

Figure 2: Zoning of the site and surrounding area

DESCRIPTION OF THE PROPOSED DEVELOPMENT

- The applicant is proposing to consolidate underlying lots and rezone the subject site to “C2” Commercial Community to expand the existing commercial use on the subject site with a 607.55 square foot addition.
- The existing commercial building includes an office for auto sales, and a two (2) bay auto repair shop.
- The submitted site plan shows that the proposed addition will be 29 foot deep by 20.95 foot wide addition on the north side of the existing building abutting the public lane to provide an additional service bay. The building will be clad with brick, with a 12 foot by 14 foot overhead door facing McGregor Street.
- The garbage enclosure will be relocated from beside the current building to the northeast corner of the site, abutting the public lane to the north and backing onto McGregor Street to the east. A new wood garbage enclosure is proposed.
- Details have been provided for a 6.5 foot high wrought iron style fence along the McGregor Street and Matheson Avenue frontages. A 6 foot high wood picket fence will be provided along the public lane.
- Drawings submitted show the closure of the existing approach on McGregor street, leaving access points via Matheson Avenue and the public lane.

COLLABORATIVE PLANNING AND CONSULTATION

- The applicant worked closely with the Public Service beginning in 2023, to revise plans and confirm support for the subject application.

ANALYSIS AND ISSUES

COMPLETE COMMUNITIES DIRECTION STRATEGY 2.0

- *The Complete Communities Direction Strategy 2.0* (*CCDS 2.0*) is one of four direction strategies supporting *OurWinnipeg*, the city's long-range development plan, and has statutory authority as a secondary plan. The strategy guides land use and development in Winnipeg.
- The subject site is designated "Established Neighbourhood - Mature Community" under CCDS 2.0 and applicable goals and policies that apply to the proposal are noted below.

  Building design

  2.8 Buildings with commercial uses should be designed to support pedestrian activity by providing building elements that increase visual interest which may include, but are not limited to, the following:

  a. Direct pedestrian access to main building entrances from the street;

  b. Transparent storefront displays;

  c. Human scaled signage; and

  d. Decorative lighting, awnings, benches and other pedestrian oriented amenities.

  Parking and loading

  2.16 For properties with public lane access, vehicular access should be taken from the public lane in order to:

  a. Reduce potential conflict between pedestrians using sidewalks and motor vehicles crossing the public right-of-way to access private property;

  b. Preserve green space and protect existing trees that can be impacted by the establishment of front approaches and corresponding private driveways; and

  c. Prevent fragmentation of the public boulevard in order to better accommodate on-street motor vehicle parking and public snow clearing.

  2.17 Locate commercial, mixed-use, or multiple family residential parking underground or behind buildings in order to create a more pedestrian-oriented built form. Active uses should be located at grade when these buildings face public streets.

  Site design

  2.22 Create or reinforce compact, pedestrian-oriented urban development patterns by ensuring the siting, form and scale of new development has a strong relationship to the street, public spaces and amenities in a way that is consistent with neighbourhood context.

  Mature Communities policies

  4.10 Consider the establishment of new neighbourhood-focused, small scale commercial uses where at least one of the following criteria are met:

  a. The property is a corner lot fronting a collector or arterial street;

  b. The property abuts an existing commercial use on a collector or arterial street;

  c. Immediately adjacent uses render the subject property unsuitable for residential development; or

  d. The property contains existing non-residential uses or buildings that were not designed to accommodate residential uses.

CITY OF WINNIPEG ZONING BY-LAW 200/2006

"C1" Commercial Neighbourhood

- The current Commercial Neighbourhood (C1) district is intended to accommodate small, compact commercial uses within or surrounded by residential areas that are attractive and compatible in scale and character with surrounding residential uses, to serve the convenience needs of the surrounding neighbourhood.
- Under the current "C1" zoning, auto, light truck, and motorcycle repair and service facilities are not a permitted use.

"C2" Commercial Community

- The Commercial Community (C2) zoning district is intended to accommodate more intensive commercial sites that do not have a local or neighbourhood orientation. The district is intended to include attractive commercial, institutional, recreational, and service facilities needed to support the surrounding neighbourhoods and the broader community.

Reason for Rezoning and Subdivision

- The applicant is required to rezone the site from "C1" to "C2" in order to facilitate an expansion of the existing auto sales and service uses. The proposed use is an existing non-conforming use, and the proposed expansion requires that the site is brought into zoning compliance.

COMPATIBILITY WITH THE SURROUNDING AREA

- As part of analyzing whether a project is "complementary" to existing development, the Urban Planning Division takes into consideration such things as land use, building heights, built-form, density, setbacks, parking, site access, and landscaping/buffering.
- The subject site is located along the McGregor Street arterial route on a corner lot between Matheson Avenue and a public lane serving.
- The proposed expansion is for a business that has existed in the community for over 10 years and serves a local need. The site and buildings have existed in its current condition since prior to 1997. The proposed expansion would help move vehicles thought more quickly and provide site improvements including ornamental fencing, closing of the approach on McGregor Street, and clean up of a corner of the site used for outside storage and waste.
- From the perspective of scale and built form, the proposed addition will be a one storey single door service bay continuing the existing building wall. The proposed addition abuts the public lane where garbage and outside storage is currently located.
- The proposed scale, character and built form of the proposed addition reflects existing development on the street and is compatible with adjacent land uses, providing a slight increase intensity with site improvements.
- Given the location of this site along an arterial road, and the proposal to improve an existing business on the site, consistent with the *Complete Communities Direction Strategy 2.0*, the Urban Planning & Design Division is supportive of a rezoning application to rezone to a "C2 Mature Communities PDO-1" District for the expansion of the existing commercial use.

RECOMMENDATION

The Urban Planning Division recommends **approval with conditions** for the following reasons:

- The subdivision and rezoning application would generally comply with the *Complete Communities Direction Strategy 2.0* and would be compatible with the surrounding area.

This Report Submitted by:
Planning, Property and Development Department
Urban Planning and Design Division

Report Prepared by: S. Jerez, RPP MCIP
PPD File #: DASZ 6/2025

Schedule "B" for File DASZ 6/2025
Lord Selkirk West Kildonan Community Committee, dated September 22, 2025

By-Law No. _____

File No. **DASZ 6/2025**

Atlas Sheet No. **V25**

N

LORD SELKIRK WEST KILDONAN COMMUNITY

Explanation

An application for the approval of the plan of subdivision shown outlined below and for a proposed zoning change to By-law No. 200/2006 by rezoning the land located at 678 McGregor street from "C1 MATURE COMMUNITIES PDO-1" COMMERCIAL NEIGHBOURHOOD DISTRICT to "C2 MATURE COMMUNITIES PDO-1" COMMERCIAL COMMUNITY DISTRICT to facilitate the consolidation of lots to allow for the expansion of an existing auto/light truck/motorcycle, repair and service use establishment by the construction of an addition.

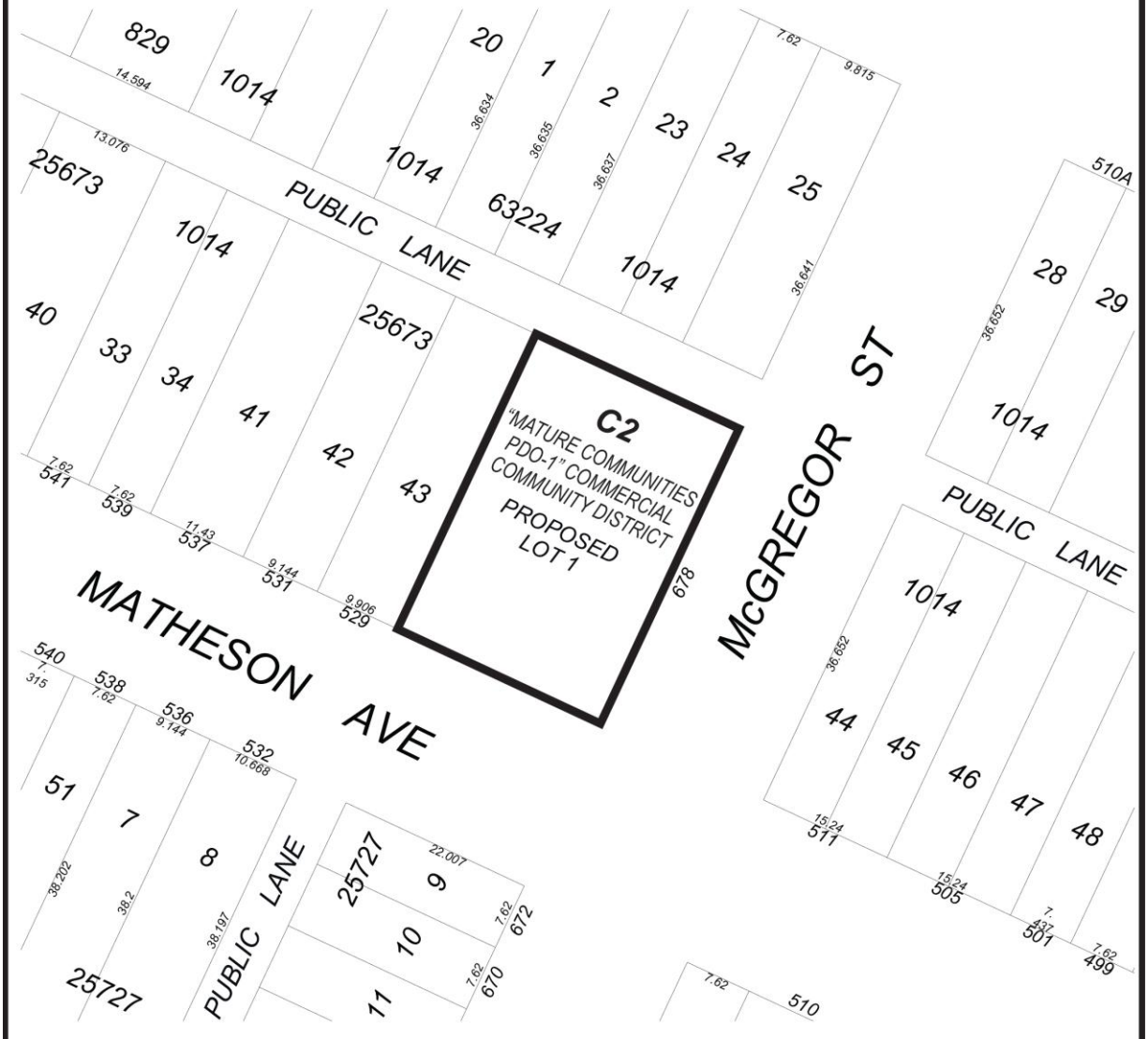

THIRD READING : _____ EFFECTIVE DATE : _____

ZONING AGREEMENT : YES ☐ NO ☐ CAVEAT No. _____

Exhibit “6” referred to in File DASZ 6/2025

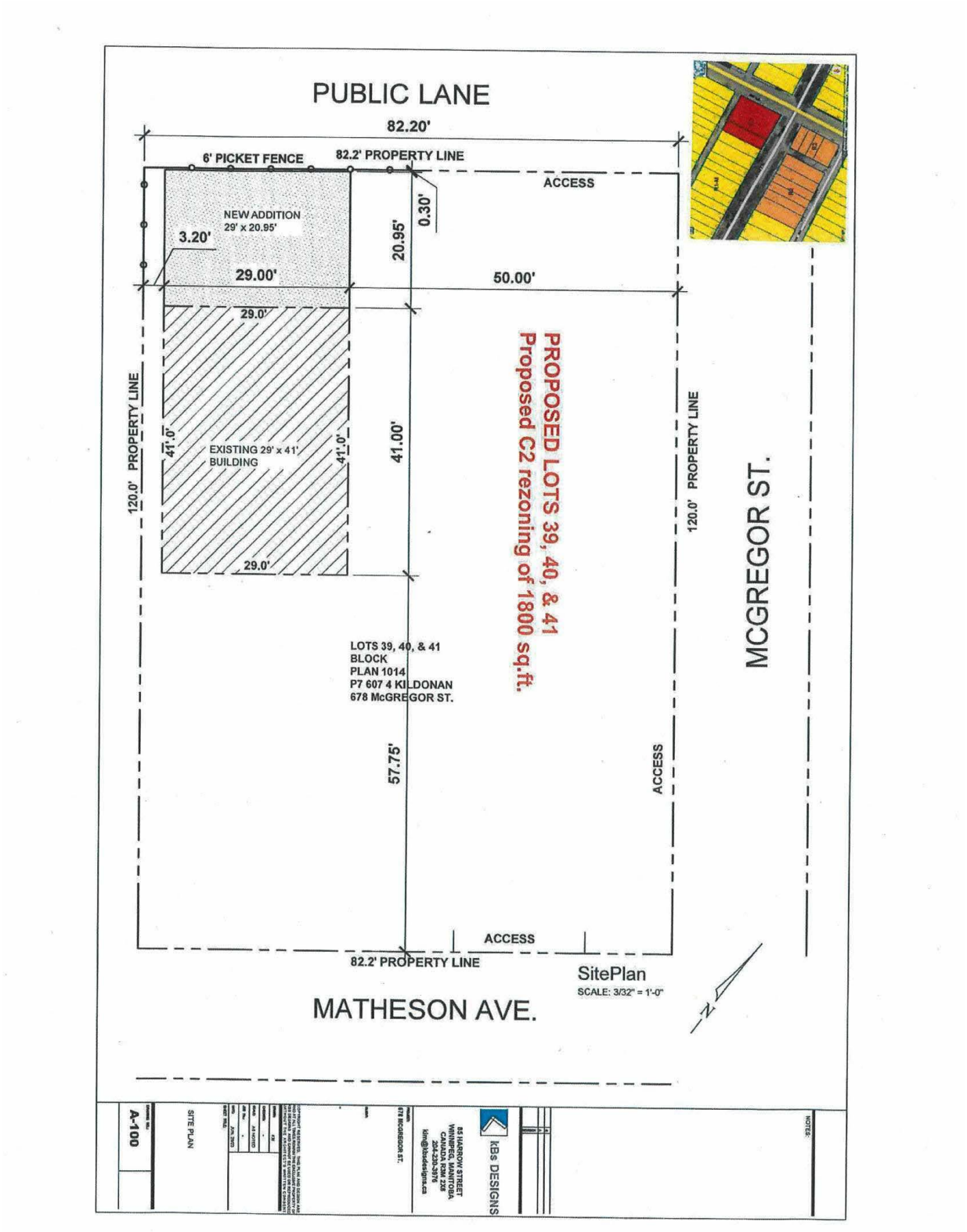

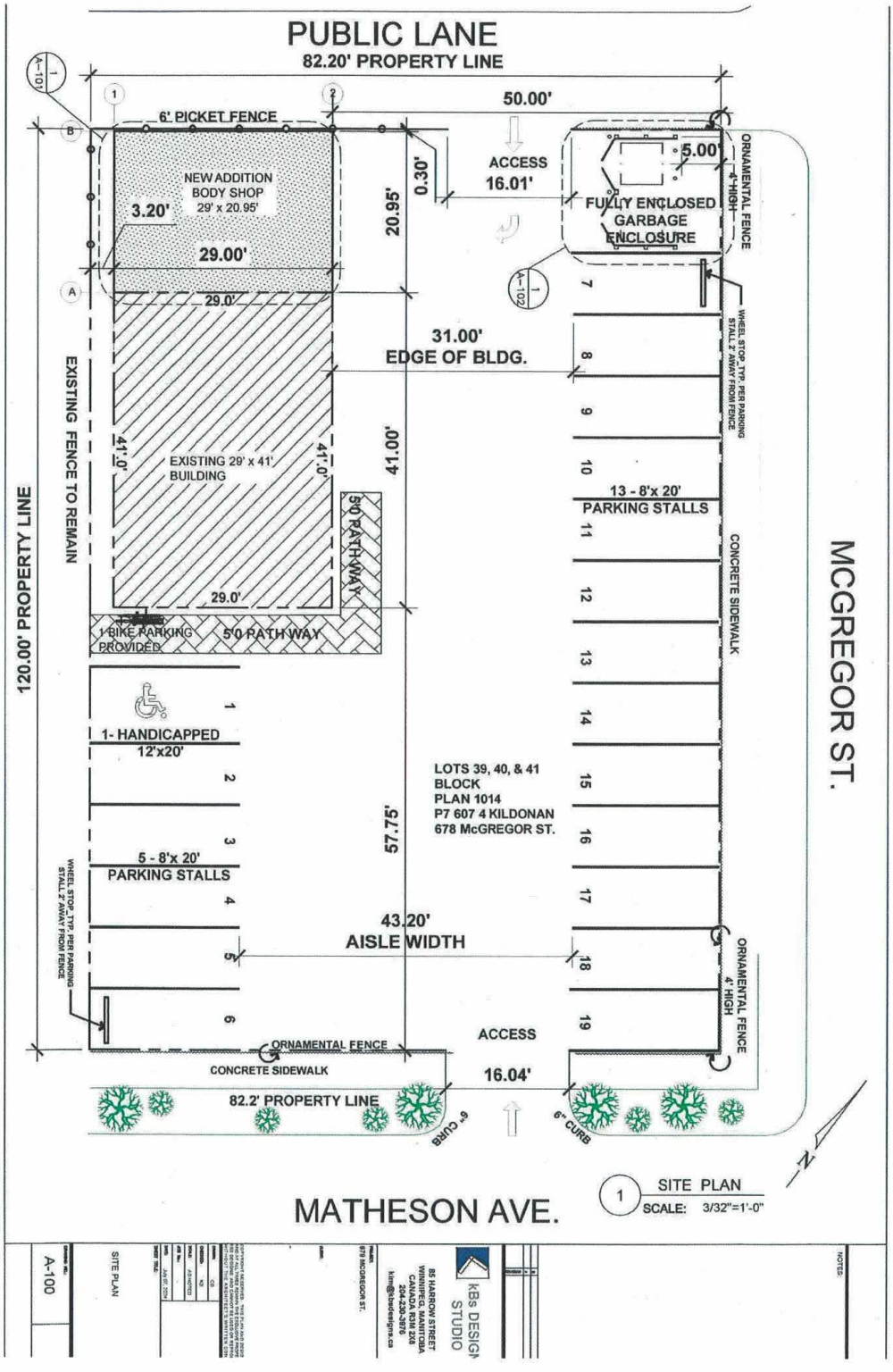
PUBLIC LANE
82.20' PROPERTY LINE
50.00'
6' PICKET FENCE
NEW ADDITION
BODY SHOP
29' x 20.95'
3.20'
29.00'
20.95'
0.30'
ACCESS
16.01'
5.00'
FULLY ENCLOSED
GARBAGE
ENCLOSURE
ORNAMENTAL FENCE
6' HIGH
31.00'
EDGE OF BLDG.
EXISTING 29' x 41'
BUILDING
41.0'
41.00'
EXISTING FENCE TO REMAIN
120.00' PROPERTY LINE
5'0 PATH WAY
1 BIKE PARKING
PROVIDED
1- HANDICAPPED
12'x20'
5 - 8'x 20'
PARKING STALLS
13 - 8'x 20'
PARKING STALLS
WHEEL STOP_TYP. PER PARKING
STALL 2' AWAY FROM FENCE
CONCRETE SIDEWALK
LOTS 39, 40, & 41
BLOCK
PLAN 1014
P7 607 4 KILDONAN
678 McGREGOR ST.
57.75'
43.20'
AISLE WIDTH
ORNAMENTAL FENCE
4' HIGH
ACCESS
16.04'
ORNAMENTAL FENCE
CONCRETE SIDEWALK
82.2' PROPERTY LINE
6" CURB
6" CURB
MCGREGOR ST.
MATHESON AVE.
SITE PLAN
SCALE: 3/32"=1'-0"
A-100
SITE PLAN
678 McGREGOR ST.
kBs DESIGN STUDIO
85 HARROW STREET
WINNIPEG, MANITOBA
CANADA R3M 2Z6
204-230-3976
NOTES:

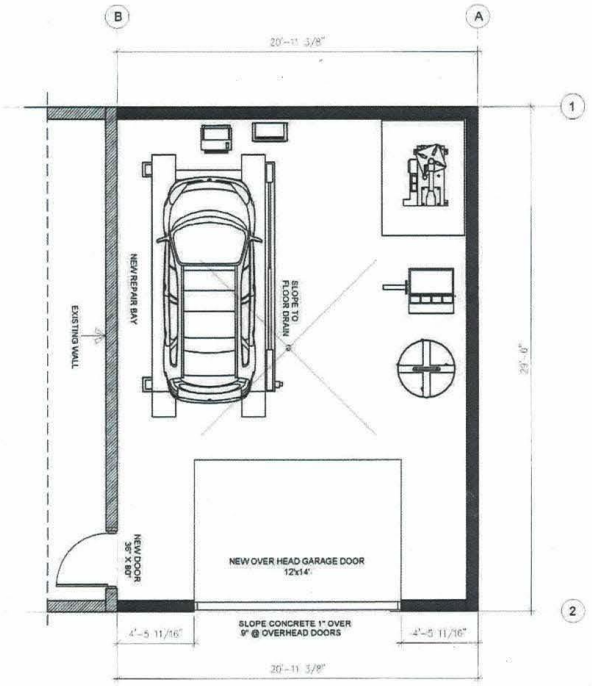

1 FLOOR PLAN — INTERIOR FLOOR AREA total = 561.8288 sq/ft
SCALE: 3/16"=1'-0"



2 FRONT ELEVATION
SCALE: 3/16"=1'-0"

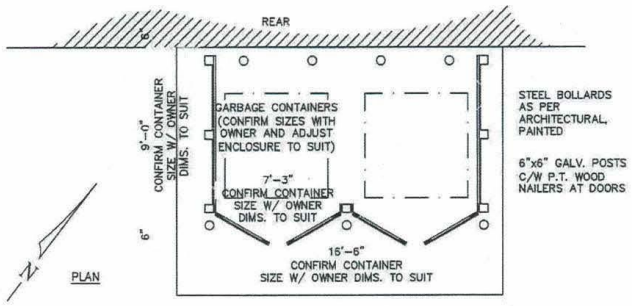

3 GARBAGE ENCLOSURE PLAN
SCALE: 3/16"=1'-0"

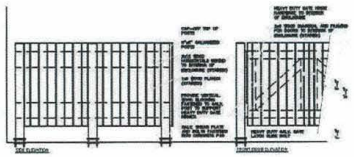

NOTES:

kBs DESIGN
65 HARROW STREET
WINNIPEG, MANITOBA
CANADA R3M 2X8
204-230-3976
kim@kbsdesigns.ca

678 MCGREGOR ST.

COPYRIGHT RESERVED. THIS PLAN AND DESIGN ARE AT ALL TIMES REMAIN THE EXCLUSIVE PROPERTY AND MAY NOT BE USED WITHOUT THE ARCHITECT'S WRITTEN CONSENT

DRAWN: KM
CHECKED:
SCALE: AS NOTED
JOB No.:
DATE: July 07, 2024

SHEET TITLE:
FLOOR PLAN
GARBAGE FLOOR PLAN
ELEVATIONS

DRAWING No.:
A-101

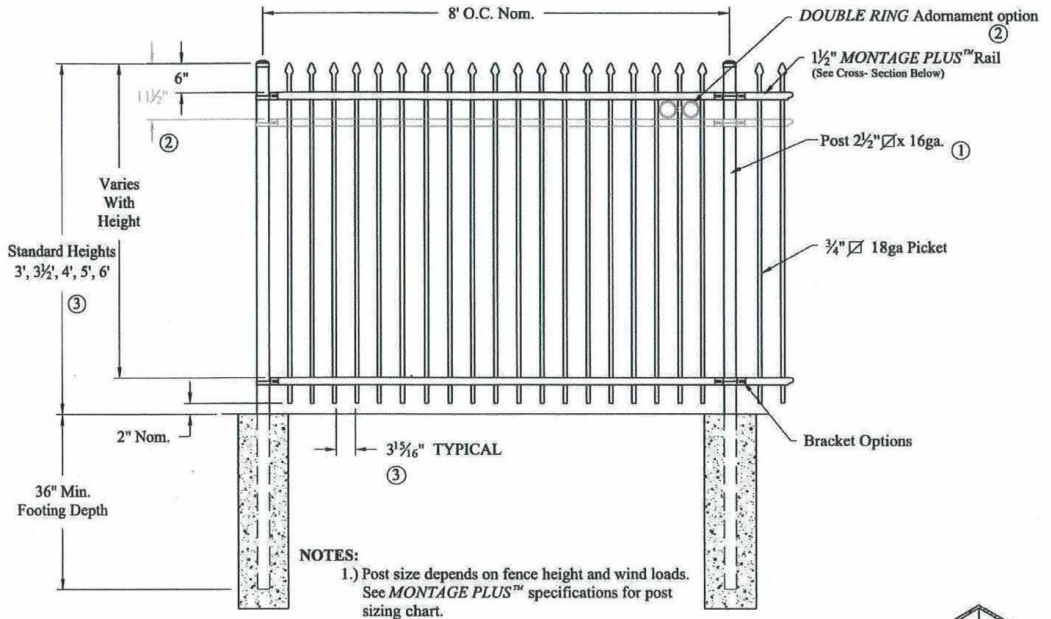

NOTES:

1.) Post size depends on fence height and wind loads. See *MONTAGE PLUS™* specifications for post sizing chart.

2.) Third rail required for *Double Rings*.

3.) Available in 3" air space and/or Flush Bottom on most heights.

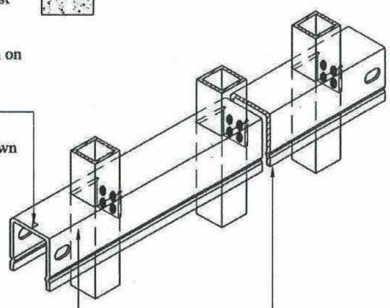

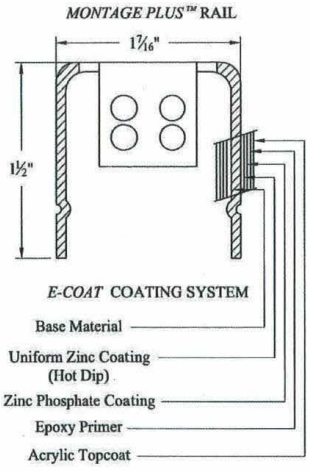

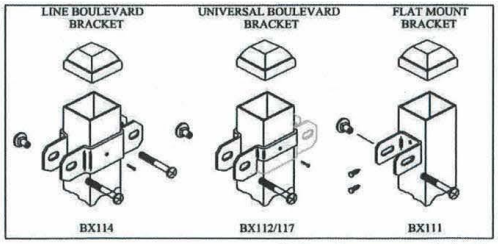

COMMERCIAL STRENGTH WELDED STEEL PANEL

PRE-ASSEMBLED

Values shown are nominal and not to be used for installation purposes. See product specification for installation requirements.

1RCISO

Title: **MONTAGE PLUS CLASSIC 2/3-RAIL**

DR: CI	SH . 1of 1	SCALE: DO NOT SCALE	
CK: ME	Date 6/28/10		REV: e

AMERISTAR®
1555 N. Mingo
Tulsa, OK 74116
1-888-333-3422
www.ameristarfence.com