520 WILLIAM AVE - MB BLDG CODE 2020 — 01 October, 2025

General: 1. Basement:
- 63.5m2 / 684sf - Mechanical / Electrical

2. Main Floor: A2 / C Combined Occupancy
- 522.2m2 / 5,622sf - total main floor
- 452.2m2 / 4,865sf - main floor A2-Assembly Occupancy
- 70.0m2 / 753sf - main floor C-Residential Occupancy

3. Upper Floors (Levels 2 - 5):
- 517.9m2 / 5,575sf - typical C-Residential Occupancy

4. Overall Building:
- 5 storeys / partial basement & crawl space
- Combustible construction
- Sprinklered
- Facing one (1) street (William Avenue)

3.1.2.1. 2) A building intended for more than one major occupancy shall be classified to all major occupancies it is intended for.
Building Classifications:
- A2: 3.2.2.24. Group A, Div 2, up to 6 storeys, any area, sprinklered
- C: 3.2.2.51. Group C, up to 6 storeys, sprinklered

3.1.3.1.1) T-3.1.3.1. Major occupancy Fire Separations:
A2 to C Occupancies - 2 hour fire separation required.

3.2.2.6.1) The most restrictive classification shall apply to the entire building EXCEPT as permitted by 3.2.2.51.5) where:
A2 is permitted within a C occupancy provided they are located below the third storey.

Building Classification:
3.2.2.51 Group C, Up to 6 Storeys, Sprinklered
1) a) building is sprinklered
b) building is not more than 6 storeys (5 storeys)
c) 18m max height from main floor to top of 5th floor (16.1m / 52.6ft)
d) building area less than 1800m2 (522.2m2)

2) Combustible construction permitted with:
a) 1 hour rated floors
b) 1 hour rated roof
c) noncombustible roof if over 25m high (+/-18.6m)
d) n/a - mezzanines
e) 1 hour rated structure

3) A2 occupancy permitted below the 3rd floor.

3.1.4.2.1) Foamed plastics 'other than adjacent concealed spaces' (wall assemblies) to be protected with ½" LB drywall (3.1.5.12.2)).
3.1.4.8.2) When facing one street, all exterior cladding to be
a) noncombustible, or
b) except as provided in sentence 4 (fire retardant treated wood), a wall assembly that satisfies sentence 3.1.5.5.(1)(b).

3.1.7.3.1) Floors/roofs shall be protected from underside.
3) Exterior walls shall be protected from inside the building.

3.1.8.12.1)a) 20minute fire rating permitted in openings between a;
i.) suite and a public corridor,
ii.) corridor and adjacent sleeping rooms
iii.) corridor and adjacent classrooms, offices, libraries, etc. in A2 occupancies
3) Door clearances to be maximum ¼" at bottom and 1/8" on all other sides.

3.1.8.19.1) Temperature Rise and Area of Limits Waived, provided:
a) the vestibule / corridor has a fire rating not less than 45min.,
b) the fire rating required in clause a) above, contains no wired glass, glass block or safety glazing within 3m / 10ft of the exit enclosure, and
c) the corridor contains no occupancy.

3.1.11.5.1) Horizontal fire blocks in concealed spaces required at 300m2 / 3229sf or 20m / 65.6ft max distance.

3.1.17.1. Occupant load determination: 2 persons per sleeping room
- Suites: 4@2bdrm = 8 bdrms x 2
= 16 persons / 25@1bdrm x 2 = 50 persons
Total residential occupancy = 66 persons
- Basement: service rm = 0 persons
- Main Hall = 4222.7m2 per 0.95m2/person = 234 persons
- Baptism = 20 (assigned) / Stage = 20 (assigned)
Total assembly occupancy = 274 persons

TOTAL BUILDING OCCUPANCY = 340 PERSONS

3.2.1.1.1) Elevator machinery, service room, stairway specifically for building service, not considered as a floor.
8) A service space pertaining only to building services not considered as a floor providing it conforms to:
3.2.5.14. Sprinkler required, with water flow devices connected to the fire alarm).
3.3.1.24. Illuminated signage provided to point out exits.
3.2.4.19. Audible fire alarm required.
3.2.7.3. Emergency lighting required.
3.3.1.3. Egress requirements are met.
3.4.2.4. Travel distances are met.
3.4.4.4. Exit integrity is met.

3.2.1.4.1) Basement ceiling to be 1 hour fire rating.
2) Basement structure to be 45 minute fire rating.

3.2.2.9.1) Crawl spaces must:
a) be less than 1.8m/5.9ft to u/s lowest part of floor assembly
b) not used for any occupancy
c) not used for passage of flue pipes
d) not used as a plenum in combustible construction.

3.2.2.10.1) Every building shall face a street.
2) A conforming access route (3.2.5.) is permitted as a street.

3.2.2.11.1) Exterior balconies shall conform to building classification requirements.

T3.2.3.1.D Separation Distances for Sprinklered, Groups A2 & C Buildings
NORTH: 1. Main floor:
100% openings permitted A of openings= n/a
L= 21.0m H=4.0m A=75.5m2 LD=12+m to centreline street
2. Levels 2-5:
100% openings permitted A of openings= n/a
L= 19.5m H=13.4m A=261.5m2 LD=12+m to centreline street

SOUTH: 1. Main floor:
100% openings permitted A of openings= n/a
L= 19.1m H=4.0m A=76.7m2 LD=13.3m to property line
2. Levels 2-5:
100% openings permitted A of openings= n/a
L= 19.5m H=13.4m A=261.5m2 LD=13.3m to property line

EAST: 1. Main floor Assembly:
14% openings permitted Openings = 2.0m2 (2.7%)
L= 18.3m H=4.0m A=73.2m2 LD=1.4m to property line
2. Main floor Suite E:
16.5% openings permitted Openings = 3.2m2 (11%)
L= 7.3m H=4.0m A=29.2m2 LD=1.4m to property line
3. Unit D (upper):
18% openings permitted A of openings=3.6m2 (11.5%)
L= 10.4m H=3.0m A=31.2m2 L=1.5m (bldg to property line)
4. Unit B (Access):
32% openings permitted A of openings=4.9m2 (23.3%)
L= 7.0m H=3.0m A=21m2 LD=2.1m (balcony projection to property line)

WEST: 1. Main floor:
100% openings permitted A of openings= n/a
L= 26.8m H=4.0m A=107.2m2 LD=12+m to centreline street
2. Unit A (upper):
100% openings permitted A of openings= n/a
L= 6.4m H=3.0m A=19.2m2 LD=12+m to centreline street
3. Unit C (upper):
100% openings permitted A of openings= n/a
L= 7.6m H=3.0m A=22.8m2 LD=12+m to centreline street

3.2.3.6.1) Balconies not permitted with 1.2m/4ft of a property line or centreline of a public right of way.
T3.2.3.7. North / South / West: no fire rating / comb. const. / comb. cladding permitted.
East: Construction required - comb. const. / non-comb. cladding required.
3.2.3.8. Protection of exterior building face required when foam plastic insulation used.

3.2.4. Fire Alarm and Detection Systems
3.2.4.1.1) Fire alarm required with sprinkler systems.
3.2.4.4.3.1(d) Single stage alarm required.
3.2.4.5.6. Verification and Commissioning required.
3.2.4.8. Signals to the Fire Department required.
3.2.4.9.& 10 Annunciator & Zone Indication required with electrical supervision.
3.2.4.11.3) Fire detectors not required in sprinklered buildings.
3.2.4.12. Smoke detectors required.
3.2.4.13. Mechanical systems shall be designed to prevent circulation of smoke.
3.2.4.16. Water flow monitoring required for sprinkler systems.
3.2.4.17. Manual stations required.
3.2.4.18. Visual signals required. (MB)
3.2.4.19. Audibility of fire alarms required.
3.2.4.21. Smoke alarms required.

3.2.5. Provisions for Fire Fighting
3.2.5.3. Roof access required (stair or hatch).
3.2.5.4. Access route required to principal entrance.
3.2.5.5. Fire hydrant required within 90m/295ft.
3.2.5.6.1)a) Overhead clearance for fire fighters to be min. 5m/16.4ft.
3.2.5.8. Standpipe system is required.
3.2.5.12. Automatic Sprinklers provided and to conform to these requirements.
3.2.5.15. Fire department connection required.
3.2.5.16. Portable fire extinguishers required per City of Winnipeg.
3.2.7. Lighting and Emergency Power Systems
3.2.7.1. Minimum levels of lighting required.
3.2.7.3.&4. Emergency lighting with emergency power required.
3.2.7.8. Emergency power required for fire alarm systems.

3.3 Safety within Floor Areas
3.3.1.2. 1 hour fire separations required between suites.
3.3.1.3.4) 2 means of egress required for occupant loads over 60.
7) Service room less than 200m2 / 25m travel permitted one exit.
3.3.1.4.2) 1 hour fire separation required for public corridor.
3.3.1.5.3) Single corridor permitted from dwelling units.
3.3.1.9.3) Residential corridors shall have no projections more than 100mm. (MB)
7) Maximum dead end corridor to be 6m / 20ft. and be min 1500mm / 5' wide.(MB)
3.3.1.13.4) Residential suite doors permitted to have deadbolts, openable from interior without special keys, devices or specialized knowledge.
3.3.1.17.1) Corridors and doorways to be min. 6.1mm width / person.
914.4mm / 36" door, less door thickness = 838mm / 33" net width = 137 persons / door. (maximum occupant load per floor = 22 persons)
3.3.1.18.1) 1070mm / 42" guards required at all level changes over 610mm / 2ft.
2) guards shall stop a 100mm/4" sphere.
3) guards shall not facilitate climbing between 140mm - 900mm (6"-35").
3.3.1.20.8) Where a window in a public area is less than 39" above the floor, it shall be protected with a guard OR be non-openable and withstand horizontal strength for a guard per 4.1.5.14.
3.3.1.22.3) No rating required for janitor rooms when sprinklered.
3.3.1.23.3) No rating required for Common Laundry Rooms when sprinklered.

3.3.4. Residential Occupancies
3.3.4.2.2) 1 hour fire rating between suites.
3.3.4.3.1) Sprinkler required in 'resident' common storage rooms.
3.3.4.5.1) Suite doors opening onto a public corridor shall not automatically lock.
3.3.4.6.1) Sound transmission to conform to Section 5.9:
- suite to suite / public corridor - 55STC minimum
- suite to service rooms - 55STC minimum
3.3.4.8.1) Protection of residential operable windows shall:
a) be protected with a guard if sill is more than 42" height OR
b) be restricted to a 100mm / 4" opening
2) A guard with minimum height of 1070mm / 42" or 4" maximum opening is not required if:
a) the opener exceeding 100mm / 4" is located higher than 42" / 1070mm OR
b) the bottom edge of the openable portion of the window is less than 1800mm / 6ft above the floor or ground on the other side.

Section 3.4 Exits
T3.4.2.1.B Criteria for one exit for sprinklered floor areas
Group C - 150m2 / 1614.6sq.ft., 2 exits required.
3.4.2.4.2) Travel distance to be measured from the door into the suite to the exit.
3) Travel distance in a service area shall not exceed 50m / 164ft.
3.4.2.5.1)e) Travel distance to be minimum 30m / 98.4ft from any point in the floor area to the exit. (+/-18.3m / 60ft provided)
3.4.2.6.1) The principal entrance shall be designed as an exit.
3.4.3.2.1) a) Corridor widths @ 1728mm / 5'-6" = 283 persons @ 6.1mm/person.
b) Stair widths @ 1100mm / 44" = 138 persons @ 8mm/person.
Note: total occupant load of upper floors is (74 persons)
T3.4.3.2.A Minimum exit widths:
- Corridors - 1100mm provided
- Stairs - 900mm (1100mm provided to upper levels / 1070mm/3'-6" provided to basement service room
- Doorways - 800mm (917mm provided)

3.4.4. Fire Separation of Exits
3.4.4.1.1.a) 1 hour fire rating required from an exit to the floor above or the floor below if there is no floor above.
3.4.4.2.1) Except as permitted by sentence 2), no exit from a floor area above o below the first storey shall lead through a lobby.
2) Not more than one exit is permitted to lead through a lobby provided;
a) the lobby floor is not more than 4.5m / 14.76ft. above grade
b) path of travel through the lobby is not more than 15m / 49ft. to the exterior.
c) adjacent rooms are not residential.
d) lobby is not located in an interconnected floor area.
e) lobby conforms to exits except;
- rooms other than service / storage rooms are permitted to open off lobby
- passenger elevator doors designed to remain closed except for loading
f) a fire separation is maintained between the lobby and any exit permitted to lead through the lobby.

3.4.4.4.6) An exit shall be designed for no other purpose than exiting or access to a floor.
3.4.5.1. Exit signage required.
3.4.6.1.1) Stairs to be maintained.
3) Nosing to be continuous to tread.
3.4.6.3.1) Maximum rise of a single stair to be less than 3.7m / 12ft.
3.4.6.4.1) Landings need not exceed 1100mm / 44".
2) Doorways require 300mm / 12" clearance to risers.
3.4.6.5.1) 1100mm/ 44" clear required between handrails.
2) One handrail shall be continuous.
5) Handrail heights to be 865-965mm / 34-38".
7) Guards at landings to be 1070mm / 42" high.
8) Except at doorways, both rails shall be continuous.
9) Handrails shall terminate in a safe manner.
10) At least one handrail shall extend 300mm / 12" past the last riser.
3.4.6.8.1) Stair runs: 280mm / 11" minimum.
2) Stair risers: 180mm / 7" maximum.
3) Nosing shall have 6mm / ¼" rounding.
3.4.6.11.1) Minimum 600mm / 2ft from door to riser.(MB)
3.4.6.12.1) Exit doors to swing in direction of travel (except doors to a suite)
3.4.6.19.1) Arabic numerals indicating floor level shall:
a) mounted on both sides of exit stairs
b) 60mm / 2" high & raised .7mm
c) be 1500mm / 5ft above floor and not more than 300mm / 12" from door
d) be contrasting colour.

3.5 Vertical Transportation
3.5.2.1. Elevators to conform to CSA B44.
3.5.3.1. Elevator shafts to be rated 1 hour.
3.5.4.2.1) Arabic numbers to be mounted on BOTH jambs of elevator door.

3.6 Service Facilities
3.6.2.1.7) Where a building is sprinklered, a 1 hour fire separation is required.
3.6.4.2.2) RE: Roof - Horizontal service space permitted to be 1/2hr where adjacent vertical fire separations are 3/4hr.

3.7 Health Requirements
T-3.7.2.2.-A Main floor Assembly occupant load = 274 persons (134 persons/sex)
Men: 3 fixtures (1 wc / 2 urinals)
Women: 6 fixtures (5 + 1 universal wc)
3.8.2.8. At least one Universal washroom is required where a barrier-free path of travel is required.
3.7.2.3.1) 1 lavatory for first 2 fixtures plus 1 for next 2 fixtures.
(Women = 3 / Men = 2)

3.8 Barrier-Free Design
3.8.1.2.1) Barrier-free entrance required.
3.8.1.3. Barrier-free path of travel required throughout and be minimum. 1100mm/44" wide. (MB)
3.8.1.5.1) Controls to be between 400-1200mm / 16-48".
3.8.2.2.3) If an exterior door landing zone is provided:
a) 1500mm/5ft access aisle x 6m/20ft
b) curb ramp required
c) clear height of 2750mm / 9ft.

3.8.2.7.1) Power door operators required on doors to:
a) interior & exterior vestibule doors of principal entrance.
b) located in public areas where a barrier-free path of travel is require, and
c) entrances to washrooms with barrier-free toilet where door closers are installed.)

3.8.3.1. Accessibility signs shall designate washrooms, entrances and be located:
- 1350mm/4'-6" above the floor
- 150mm/6" from the latch side of the door frame
- have a space 900mm/36" wide x 1500mm/5'long in front of sign
- include raised text, graphics & Braille. (MB)

3.8.3.2.b) Exterior walks: minimum 1200mm/48" wide unless adjacent to streets where
c) they shall be 1500mm/60". (MB)
d) 1500mm/60" turning square every 9m/30' maximum (MB)

3.8.3.1.2) Room identification signage shall be;
a) 1350mm / 4'-6" AFF (Above Finished Floor) and 150mm / 6" from latch side of door.
b) have a 1500 x 900 clear space in front of it.
c) include appropriate braille, raised text, graphics.

3.8.3.3. Doors and doorways:
1) doors and min. minimum 800 mm clear
2) doors to have lever handles
4) door thresholds to be 12 mm max
5) power door operator required at every exterior door and have a guard located on the hinge side (MB).
5.3) front entrance must have sensor to stop door operation if a person is sensed in the opening area. (MB)
10) 305 mm clearance on latch side of push door / 610 mm on pull side of latch.
11) vestibules shall be minimum the width of the door plus 1500mm/5' (MB).
3.8.3.5. Elevator to conform to CSA B355

3.8.3.12.1) Universal toilet rooms
a) be equipped with a lockable door open-able from the exterior in an emergency.
b) lavatory requirements:
c) wc fixture as per the following drawing.
d) grab bars as per the following drawing.
e) clearances as per the following drawing.
j) have a 1700 mm / 5'-8" turning circle (MB)
NOTE:the swing of the door is not permitted to intersect this circle (MB).
Note: Accessible Suites to conform to CSA, per CMHC program requirements.

Note: wc fixture to wall clearance of 285-305 mm 11"-12".

ALTERNATE SOLUTION #1
Ceiling Membrane Openings permitted in Combustible Construction 01 October, 2025
MBC requirement: 3.1.8.7. Location of Fire Dampers and Smoke Dampers
3.1.8.10. Installation of Fire Dampers
Alternate Solution: Unprotected openings in fire rated ceiling membranes (2 layers of 5/8" U
1 hr ULC) are permitted providing they meet the following Reference section below and as de
the Detailed Instruction section.

Reference: Appendix D Fire Performance Ratings, MBC-2020
D-2.3.10. Ceiling Membrane Openings
D-2.3.12. 2 layers of 5/8" UL drywall = 1 hour FRR

Detailed Instruction:
Mechanical duct openings within the fire-rated drywall ceiling membranes are permitted to wa
fire dampers provided they meet D-2.3.10. of App D as follows:
1) Except for D-2.3.12, where a floor or ceiling is assigned a fire resistance rating on the basis of this subsection AND incorporates a ceiling membrane described in:
D-2.3.4.B (UL drywall ceiling membranes) - applies
D-2.3.4.C (UL drywall roof membranes) - applies
D-2.3.4.D (plaster ceiling membranes) - not applicable
the ceiling may be penetrated by openings leading to ducts within concealed spaces above th membrane, provided:

a) Ceiling Membrane cannot exceed 1 hour (Burnett ceilings are 2 layers of 5/8" UL dw = 1hr per D-2.3.12.)
b) The area of any opening does not exceed 930cm2 / 144sq.in. (elev. lobby office: max. grill area = 12" x 12" meets 144sq.in. maximum allowable.)
c) The aggregate area of openings does not exceed 1% of the ceiling area of the total fire compartment It is located in. (smallest suite = 501sf x 1% = 721.4sq.in./4645cm2: 6 openings total of 780cm2) (elev.lobby = 475sf x1% = 684sq.in./4413cm2: 4 openings (1144sq.in. each) = 3844cm2)
d) The total depth of the cavity above the ceiling is not less than 230mm/9". (cavity depth = 22" wood joists at 16" o/c)
e) No dimension of any opening exceeds 310mm/12". (max. grill dimension = 12")
f) Where framing members exceed 400mm/16", supports are provided for openings with any dimension exceeding 150mm. (typical floor framing = 22" wood joists at 16" o/c)
g) Individual openings are spaced not less than 2m/6'-6 ½" apart. (instruction to trade)
h) The ducts are sheet steel and supported by steel strapping attached to framing members. (instruction to trade)
i) The clearance from the top surface of the membrane to the bottom of the duct is not less than 100mm/4". (instruction to trade)

2) Where the opening exceeds 130cm2 / 20.1sq.in. or 5.07"diameter. (Instruction to trade: maximum openings within suites to be 130cm2/20.1sq.in. or 5.07" max. dia. if round or 4.5" x 4.5" if square or 12" max. dimension if rectangle.) it shall be protected by:
a) a fire damper OR (alternate solution for larger ducts)
b) thermal protection above the duct consisting of the same materials as the ceiling membrane, mechanically fastened to the ductwork and extending 200mm/8" beyond the opening on all sides. (For ducts greater than 130cm2/20.1sq.in. provide 2 layers of 5/8" UL drywall on top of the supply duct, above the ceiling grill and extending min. 8" beyond the dimension of the opening on all sides.) See Figure D-2.3.10. below.

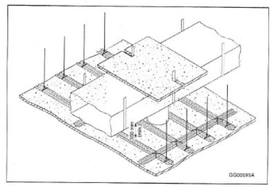

Figure D-2.3.10.
Thermal protection above a duct

A-3.2.2.51.(5) and 3.2.2.60.(4) Occupancy Combinations in Buildings of Mixed Construction. Buildings conforming to the building height and area limits and the other fire protection requirements of Article 3.2.2.51. or 3.2.2.60. may be entirely constructed of combustible construction and incorporate the occupancies specifically permitted by Sentence 3.2.2.51.(5) or 3.2.2.60.(4): e.g., Group A, Division 2 and Group E major occupancies on the first and second storeys, and a parking garage on the first to third storeys.

Alternatively, the requirements of Articles 3.2.2.4. to 3.2.2.8. for superimposed major occupancies can be applied, resulting in buildings of mixed construction conforming to the building height and area limits of Article 3.2.2.51. or 3.2.2.60. and in which the lower storeys are of noncombustible construction and the upper storeys are of combustible construction, for example, a Group A, Division 2 or Group B, Division 3 major occupancy could be located on the first 4 storeys of a 6-storey Group C building constructed in accordance with Article 3.2.2.51., as long as these first 4 storeys were constructed of noncombustible construction in accordance with Article 3.2.2.23. or 3.2.2.42., as applicable. (See also Articles 3.2.2.6. and 3.2.2.7.)

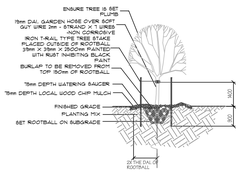

1 DECIDUOUS TREE PLANTING DETAIL A.1

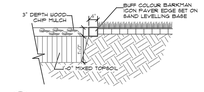

3 A.1 SHRUB BED/CON PAVER EDGE SECTION

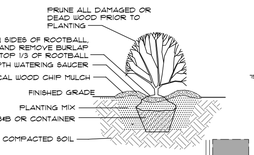

2 A.1 SHRUB PLANTING DETAIL

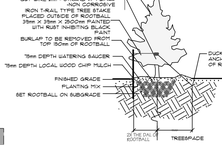

4 A.1 CONIFEROUS TREE PLANTING DETAIL

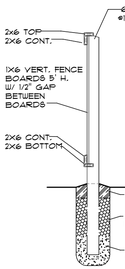

5 FENCE DETAIL

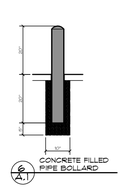

6 CONCRETE FILLED PIPE BOLLARD

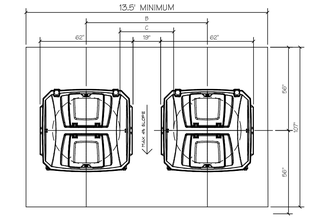

3 A1 TYPICAL TRASH BIN PLAN VIEW W/O BOLLARDS

NOTE:

CONTRACTOR TO ENSURE A MIN EXCAVATION OF ONE HALF OF A (0.5) CUBIC METRE (OR A CUBIC YARD). EXCAVATION DEPTH TO BE CONFIRMED PRIOR TO WORK COMMENCING.

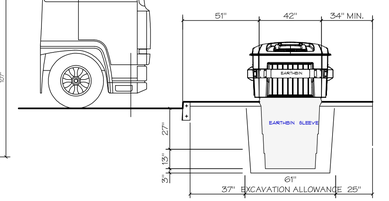

1 TYPICAL CROSS SECTION

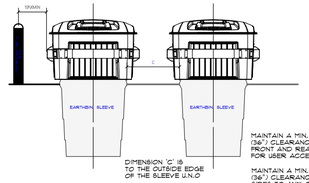

2 A1 BINS ELEVATION VIEW

MINIMUM DIMENSIONS BETWEEN BINS

B	C	D
2640 [104"]	1170 [46"]	5485 [216"]
2745 [108"]	1270 [50"]	5790 [228"]
3050 [120"]	1575 [62"]	6170 [243"]
3860 [152"]	2380 [94"]	6425 [253"]

SUGGESTED PLANT LIST — URBAN INFILL SITE

KEY	QTY	Botanical Names	Common Names	REMARKS	Size	SYMBOL
A	1	Malus Jeffersiana	Purple Spire Rosejelpidoni Crabapple	Specimen B&B, machine dug with min. 10 branches in a well branched head, straight trunk. Min Ht. 6ft Branching Ht. 1.8ft	60mm cal.	DECIDUOUS TREE
B	2	Juniperus Scopulorum 'Medora'	Medora Juniper	Specimen B&B, machine dug with min. single upright leader, straight trunk. Well branched, full form	1.8M	CONIFEROUS TREE
C	18	Viburnum Trilobum 'Bailey Compact'	Compact American Cranberry	Specimen container grown with min. 3 stalks well branched plant Min ht. 450mm	5 gal. pot	DECIDUOUS SHRUB
D	9	Juniperus Sabina 'Arcadia'	Arcadia Juniper	Specimen container grown with min. 3 stalks well branched plant Min ht. 450mm	2 gal. pot	CONIFEROUS SHRUB
E	24	Agropyron Subsecundum	Wand Wheatgrass	Specimen container grown with vigourous roots, freeof disease and insects.	1 gal. pot	ORNAMENTAL GRASS

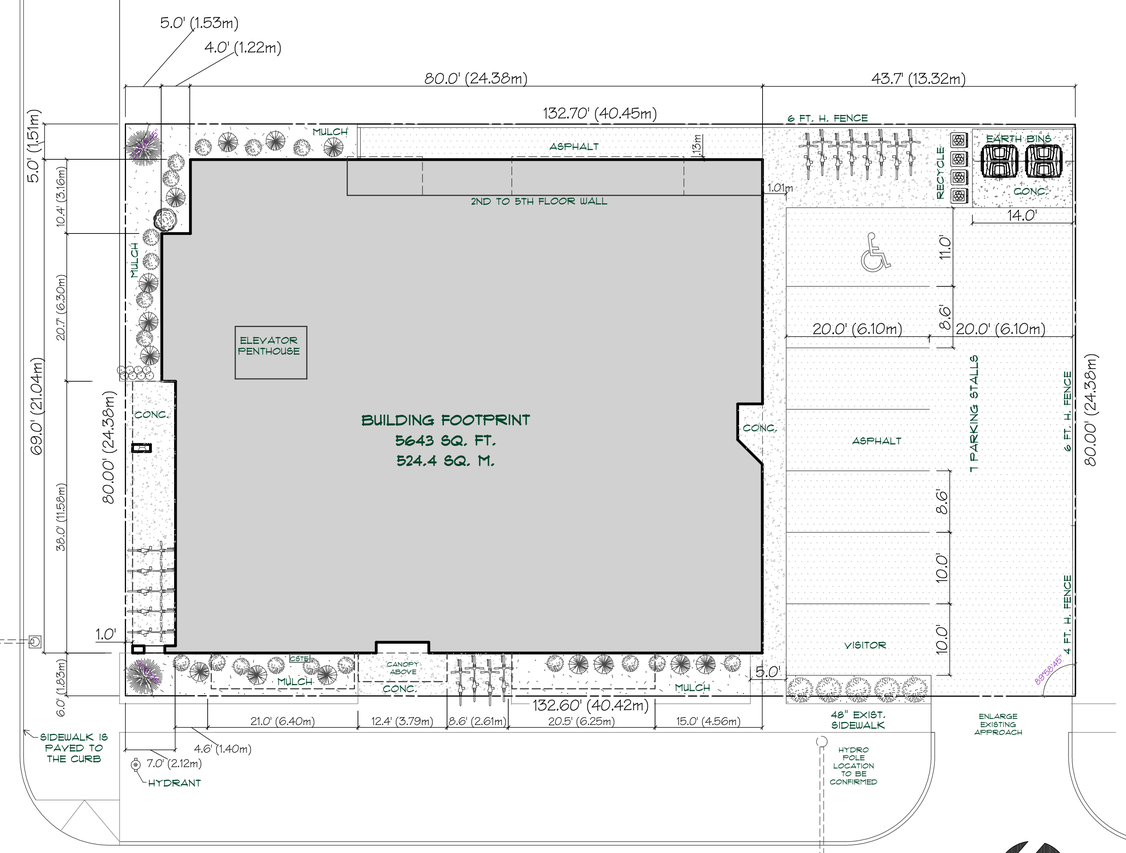

SP Lot 16, PLAN 32423 WLTO in RL 6 and 7, Parish of St. John

Site area: 10,608sf / 985.5m2

29 UNITS TOTAL:
MAIN FLOOR
GROUP USE AREA
TWO BEDROOM - 1 UNIT
SECOND FLOOR
ONE BEDROOM - 6 UNITS
TWO BEDROOM - 1 UNIT
THIRD TO FIFTH FLOOR
ONE BEDROOM - 6 UNITS EA.
TWO BEDROOM - 1 UNIT. EA.

PROVINCE OF MANITOBA — GERALD A. KORZENIOWSKI — REGISTERED ARCHITECT — 9 Oct. 2025
REGISTERED ARCHITECTURAL CORPORATION — GERALD A. KORZENIOWSKI ARCHITECT INC. — 9 Oct. 2025

Architect
GERALD A. KORZENIOWSKI ARCHITECT INC.
20 VALCOURT WAY
BRANDON, MB. R7C 0B3
PHONE: (204) 832-8666

Project Title
520 WILLIAM AVE.
MULTI - FAMILY
WINNIPEG MB

ISSUED FOR CONSTRUCTION

Drawn By

Sheet Title
SITE PLAN

Date | Scale 1" = 10.0'

Version | Sheet Number
A.1

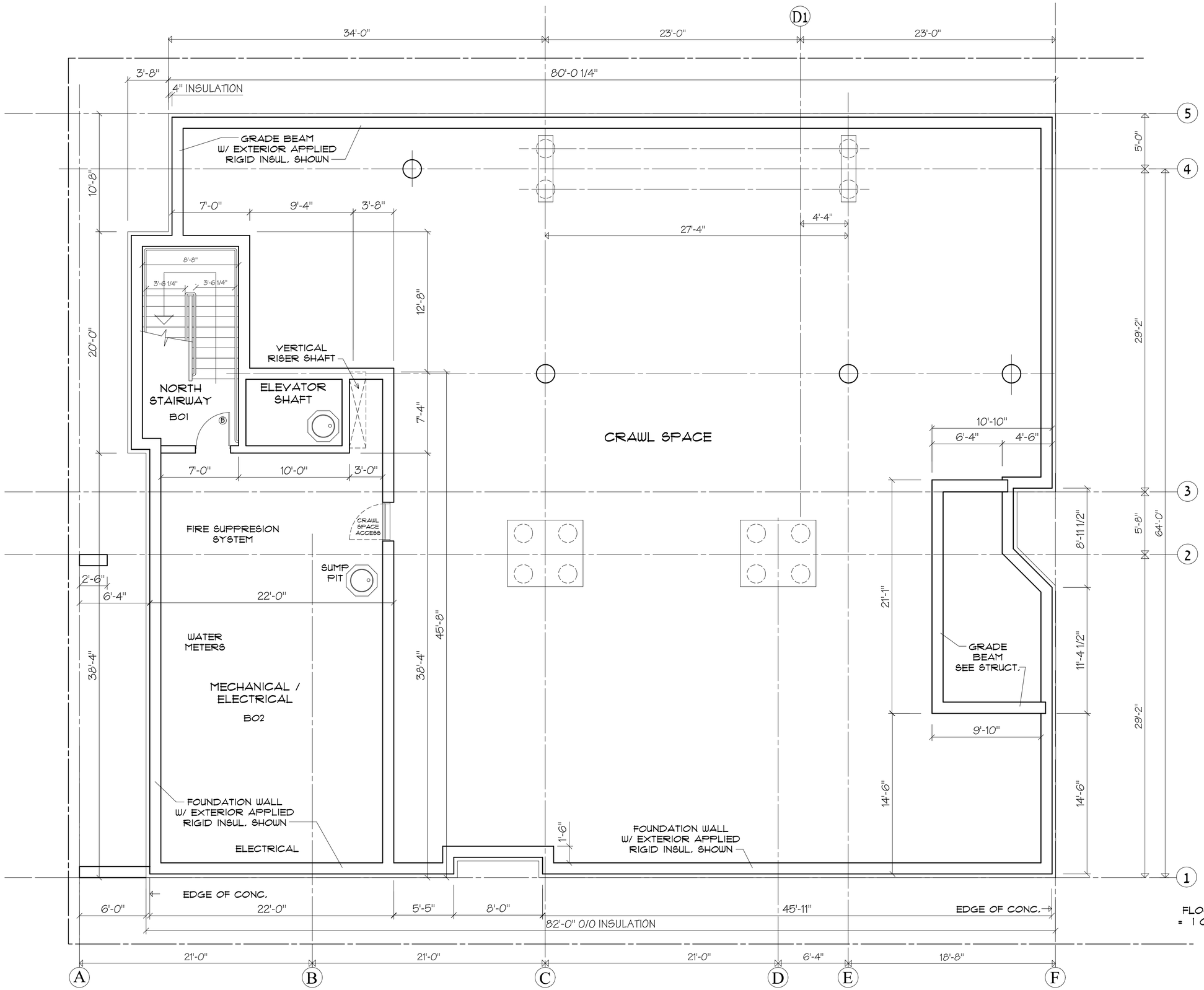

FLOOR AREA
= 1 060 sq. ft.

Consultants

ARCHITECTURAL TECHNOLOGIST

tsquaretechniques@gmail.com
204.771.2436

Project Management

BOUCHARD
BROS 2014 LTD

Seal

PROVINCE OF MANITOBA
GERALD A. KORZENIOWSKI
Digital Signature Applied
REGISTERED ARCHITECT
9 Oct. 2025

GERALD A. KORZENIOWSKI ARCHITECT INC.
No. 620
MANITOBA ARCHITECTURAL CORPORATION
9 Oct. 2025

Description	Date (m/d/y)	Drawn	Checked

Revisions/Issuance (Reed 02)

Arch.

Architect

GERALD A. KORZENIOWSKI
ARCHITECT INC.

20 VALCOURT WAY
BRANDON, MB. R7C 0B3
PHONE: (204) 832-8666

Project Title

520 WILLIAM AVE.
MULTI - FAMILY

WINNIPEG MB

ISSUED FOR CONSTRUCTION

Drawn By: BLM

Sheet Title: **CRAWL SPACE PLAN**

Date: 09/10/2025 Scale: 1/4" = 1' - 0"

Version: 9.29 Sheet Number: **A.2**

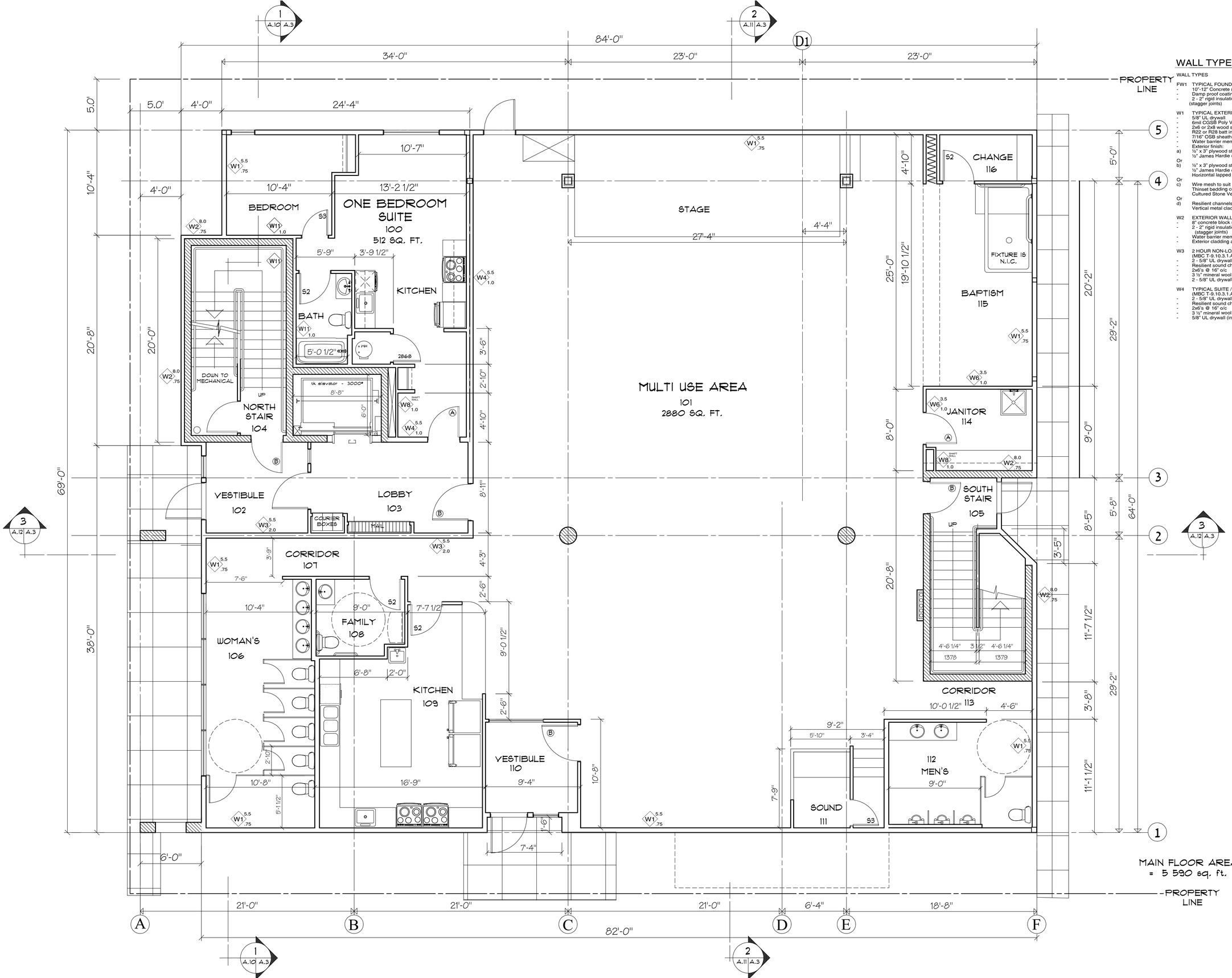

WALL TYPES:

ALL PENETRATIONS IN FIRE RATED WALLS SHALL BE SUITABLY FIRE STOPPED.

WALL TYPES

FW1 TYPICAL FOUNDATION WALL
- 10"-12" Concrete (see structural)
- Damp proof coating
- 2 - 2" rigid insulation (R-20) (stagger joints)

W1 TYPICAL EXTERIOR WALL
- 5/8" UL drywall
- 6mil CGSB Poly Vapour Barrier
- 2x6 or 2x8 wood studs (see structural)
- R22 or R28 batt insulation
- 7/16" OSB sheathing
- Water barrier membrane
- Exterior finish:

a) ½" x 3" plywood strips @ 24" o/c
½" James Hardie cementitious panels

Or

b) ½" x 3" plywood strips @ 24" o/c
½" James Hardie cementitious
Horizontal lapped siding

Or

c) Wire mesh to suit
Thinset bedding compound
Cultured Stone Veneer

Or

d) Resilient channels @ 24" o/c
Vertical metal cladding

W2 EXTERIOR WALLS (Concrete Block)
- 8" concrete block (paint finish)
- 2 - 2" rigid insulation (R-20) (stagger joints)
- Water barrier membrane
- Exterior cladding as per W1

W3 2 HOUR NON-LOADBEARING PARTITION (MBC T-9.10.3.1.A / W6d - 2hr frr / 58 stc)
- 2 - 5/8" UL drywall
- Resilient sound channels
- 2x6's @ 16" o/c
- 3 ½" mineral wool insulation
- 2 - 5/8" UL drywall

W4 TYPICAL SUITE / CORRIDOR PARTITION (MBC T-9.10.3.1.A / W4a - 1hr frr / 51 stc)
- 2 - 5/8" UL drywall (corridor side)
- Resilient sound channels
- 2x6's @ 16" o/c
- 3 ½" mineral wool insulation
- 5/8" UL drywall (int. suite)

W5 TYPICAL SUITE / SUITE PARTY WALL (MBC T-9.10.3.1.A / W13a (sim)- 1hr frr / 58 stc) (ULC W454 - NRC - Socrates (16") / 55 stc)
- 5/8" UL drywall
- 2x4's @ 16" o/c
- 3 ½" mineral wool insulation
- ½" air space
- 7/16" plywood sheathing
- 2x4's @ 16" o/c
- 3 ½" mineral wool insulation
- 5/8" UL drywall

W6 45 MINUTE FIRE RATED PARTITION (MBC T-9.10.3.1.A / W1d - 1hr frr / 32 stc)
- 5/8" UL drywall
- 2x4's @ 16" o/c
- 5/8" UL drywall

W7a&b SUITE / SERVICE ROOM PARTITION
- ½" drywall
- 2x4's @ 16" o/c
- ½" drywall

Note 1 - W7b uses 2x6 studs
Note 2 - add 3 ½" fiberglass sound batts where "S" shown

W8 SHAFT WALL (ULC W452 / 1 hr frr / 39 stc)
- 1" shaft liner type X
- 2 ½" shaftwall studs @ 24" o/c
- 5/8" UL drywall (ptd where exposed)
- Use 'J' shape track top and bottom

W9 STAIR & ELEVATOR SHAFTS - PUBLIC AREAS (MBC T-9.10.3.1.A / B1b - 1hr frr / 50 stc)
- Concrete block (painted where exposed)
- 7/8" metal furring channels @ 24" o/c
- ½" drywall

W10 PLUMBING WALL
- ½" drywall
- 2x4's @ 16" o/c (spaced away from wall as req'd)

W11 SUITE TO STAIR OR ELEVATOR WALL (MBC T-9.10.3.1.A / B10a (sim) - 3hr frr / 56 stc)
- 8" concrete block
- 2x4's @ 16" o/c
- 3 ½" mineral wool insulation
- Resilient sound bars @ 24" o/c
- 2 - 5/8" UL drywall

W12 STAIR / ELEVATOR WALL (MBC T-9.10.3.1.A / B1b - 1hr frr / 50 stc)
- 8" concrete block
- Paint finish where exposed

Consultants
ARCHITECTURAL TECHNOLOGIST
tsquaretechniques@gmail.com
204.771.2436
T-Square techniques

Project Management
BOUCHARD
BROS 2014 LTD

Seal
PROVINCE OF MANITOBA GERALD A. KORZENIOWSKI REGISTERED ARCHITECT 9 Oct. 2025
GERALD A. KORZENIOWSKI ARCHITECT INC. No. 630 REGISTERED ARCHITECTURAL CORPORATION 9 Oct. 2025

No.	Description	Date (mm/dd)	Drawn	Checked
	Revisions/Issuance (Record copy)			

Architect
GERALD A. KORZENIOWSKI ARCHITECT INC.
20 VALCOURT WAY
BRANDON, MB. R7C 0B3
PHONE: (204) 832-8666

Project Title
520 WILLIAM AVE.
MULTI - FAMILY
WINNIPEG MB

ISSUED FOR CONSTRUCTION

Drawn By

Sheet Title
MAIN FLOOR PLAN

Date 09/10/2025 Scale 1/4" = 1' - 0"

Version 9.29 Sheet Number **A.3**

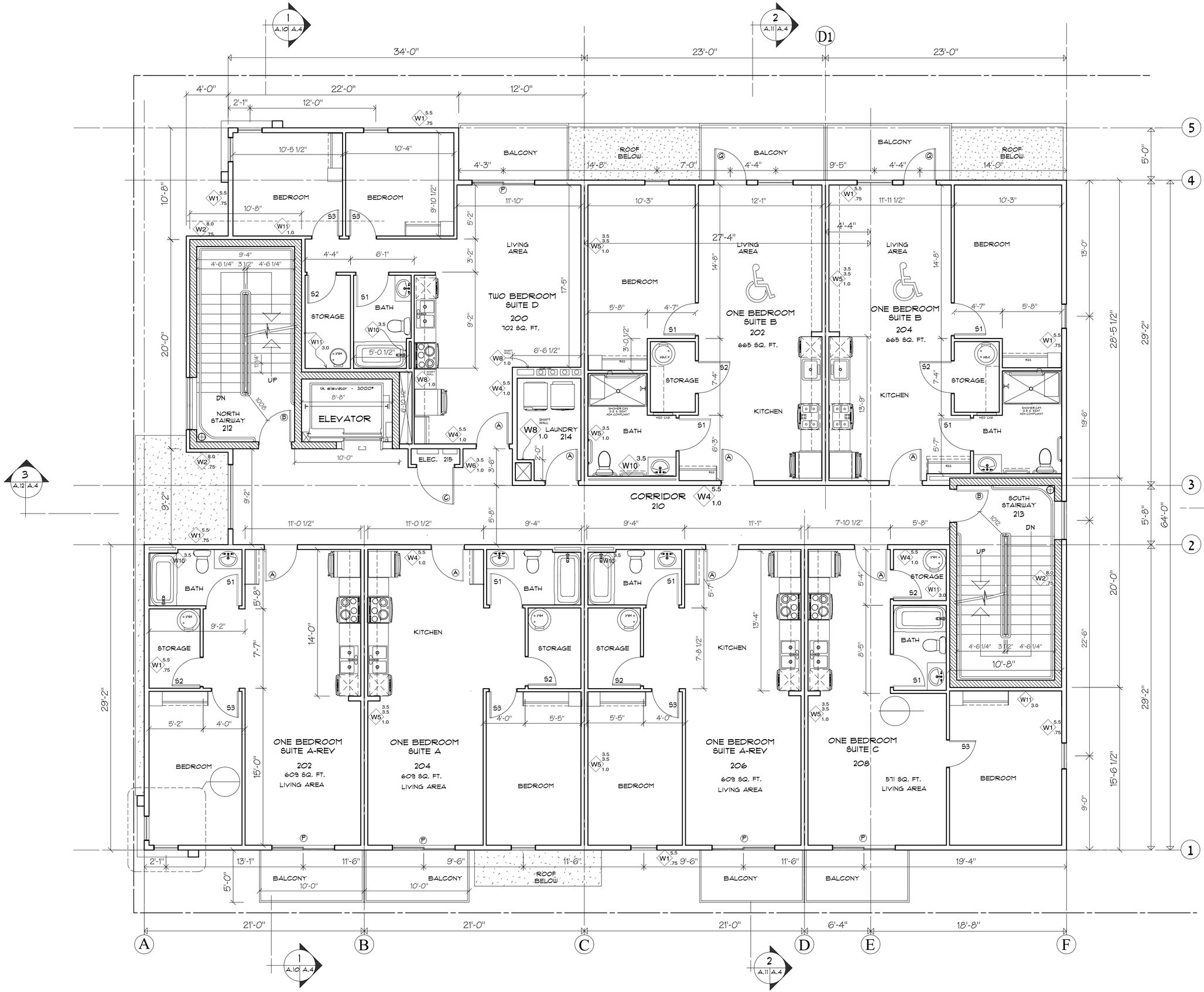

WALL TYPES:

ALL PENETRATIONS IN FIRE RATED WALLS SHALL BE SUITABLY FIRE STOPPED.

WALL TYPES

FW1 TYPICAL FOUNDATION WALL
- 10"-12" Concrete (see structural)
- Damp proof coating
- 2 - 2" rigid insulation (R-20) (stagger joints)

W1 TYPICAL EXTERIOR WALL
- 5/8" UL drywall
- 6mil CGSB Poly Vapour Barrier
- 2x6 or 2x8 wood studs (see structural)
- R22 or R28 batt insulation
- 7/16" OSB sheathing
- Water barrier membrane
- Exterior finish:

a) ½" x 3" plywood strips @ 24" o/c
½" James Hardie cementitious panels

Or

b) ½" x 3" plywood strips @ 24" o/c
½" James Hardie cementitious
Horizontal lapped siding

Or

c) Wire mesh to suit
Thinset bedding compound
Cultured Stone Veneer

Or

d) Resilient channels @ 24" o/c
Vertical metal cladding

W2 EXTERIOR WALLS (Concrete Block)
- 8" concrete block (paint finish)
- 2 - 2" rigid insulation (R-20) (stagger joints)
- Water barrier membrane
- Exterior cladding as per W1

W3 2 HOUR NON-LOADBEARING PARTITION (MBC T-9.10.3.1.A / W6d - 2hr frr / 58 stc)
- 2 - 5/8" UL drywall
- Resilient sound channels
- 2x6's @ 16" o/c
- 3 ½" mineral wool insulation
- 2 - 5/8" UL drywall

W4 TYPICAL SUITE / CORRIDOR PARTITION (MBC T-9.10.3.1.A / W4a - 1hr frr / 51 stc)
- 2 - 5/8" UL drywall (corridor side)
- Resilient sound channels
- 2x6's @ 16" o/c
- 3 ½" mineral wool insulation
- 5/8" UL drywall (int. suite)

W5 TYPICAL SUITE / SUITE PARTY WALL (MBC T-9.10.3.1.A / W13a (sim)- 1hr frr / 58 stc) (ULC W454 - NRC - Socrates (16") / 55 stc)
- 5/8" UL drywall
- 2x4's @ 16" o/c
- 3 ½" mineral wool insulation
- ½" air space
- 7/16" plywood sheathing
- 2x4's @ 16" o/c
- 3 ½" mineral wool insulation
- 5/8" UL drywall

W6 45 MINUTE FIRE RATED PARTITION (MBC T-9.10.3.1.A / W1d - 1hr frr / 32 stc)
- 5/8" UL drywall
- 2x4's @ 16" o/c
- 5/8" UL drywall

W7a&b SUITE / SERVICE ROOM PARTITION
- ½" drywall
- 2x4's @ 16" o/c
- ½" drywall

Note 1 - W7b uses 2x6 studs
Note 2 - add 3 ½" fiberglass sound batts where "S" shown

W8 SHAFT WALL (ULC W452 / 1 hr frr / 39 stc)
- 1" shaft liner type X
- 2 ½" shaftwall studs @ 24" o/c
- 5/8" UL drywall (ptd where exposed)
- Use 'J' shape track top and bottom

W9 STAIR & ELEVATOR SHAFTS - PUBLIC AREAS (MBC T-9.10.3.1.A / B1b - 1hr frr / 50 stc)
- Concrete block (painted where exposed)
- 7/8" metal furring channels @ 24" o/c
- ½" drywall

W10 PLUMBING WALL
- ½" drywall
- 2x4's @ 16" o/c (spaced away from wall as req'd)

W11 SUITE TO STAIR OR ELEVATOR WALL (MBC T-9.10.3.1.A / B10a (sim) - 3hr frr / 56 stc)
- 8" concrete block
- 2x4's @ 16" o/c
- 3 ½" mineral wool insulation
- Resilient sound bars @ 24" o/c
- 2 - 5/8" UL drywall

W12 STAIR / ELEVATOR WALL (MBC T-9.10.3.1.A / B1b - 1hr frr / 50 stc)
- 8" concrete block
- Paint finish where exposed

SECOND FLOOR :

6 ONE BEDROOM
1 - 2 BEDROOM UNITS

FLOOR AREA
= 5 546 sq. ft.

Consultants
ARCHITECTURAL TECHNOLOGIST
tsquaretechniques@gmail.com
204.771.2436

Project Management
BOUCHARD BROS 2014 LTD

Seal
PROVINCE OF MANITOBA GERALD A. KORZENIOWSKI REGISTERED ARCHITECT 9 Oct. 2025
GERALD A. KORZENIOWSKI ARCHITECT INC. No. 083 REGISTERED ARCHITECTURAL CORPORATION 9 Oct. 2025

No.	Description	Date (mm/dd)	Drawn	Checked
Revisions/Issuance (Record Copy)				

Architect
GERALD A. KORZENIOWSKI ARCHITECT INC.
20 VALCOURT WAY
BRANDON, MB. R7C 0B3
PHONE: (204) 832-8666

Project Title
520 WILLIAM AVE.
MULTI - FAMILY
WINNIPEG MB

ISSUED FOR CONSTRUCTION

Drawn By

Sheet Title
SECOND FLOOR PLAN

Date 09/10/2025 Scale 1/4" = 1' - 0"

Version 9.29 Sheet Number **A.4**

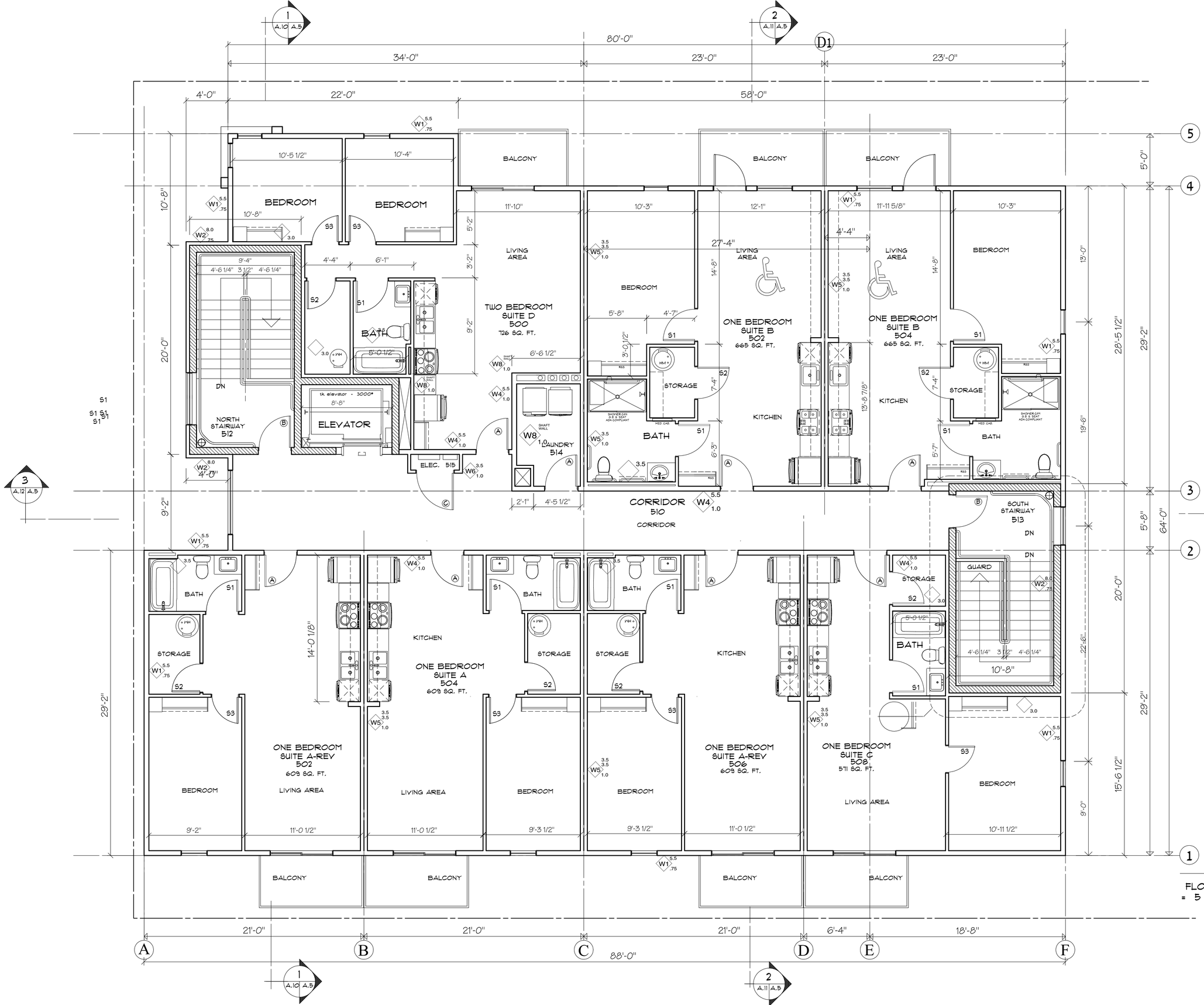

WALL TYPES:

ALL PENETRATIONS IN FIRE RATED WALLS SHALL BE SUITABLY FIRE STOPPED.

WALL TYPES

FW1 TYPICAL FOUNDATION WALL
- 10"-12" Concrete (see structural)
- Damp proof coating
- 2 - 2" rigid insulation (R-20) (stagger joints)

W1 TYPICAL EXTERIOR WALL
- 5/8" UL drywall
- 6mil CGSB Poly Vapour Barrier
- 2x6 or 2x8 wood studs (see structural)
- R22 or R28 batt insulation
- 7/16" OSB sheathing
- Water barrier membrane
- Exterior finish:

a) ½" x 3" plywood strips @ 24" o/c
½" James Hardie cementitious panels

Or

b) ½" x 3" plywood strips @ 24" o/c
½" James Hardie cementitious
Horizontal lapped siding

Or

c) Wire mesh to suit
Thinset bedding compound
Cultured Stone Veneer

Or

d) Resilient channels @ 24" o/c
Vertical metal cladding

W2 EXTERIOR WALLS (Concrete Block)
- 8" concrete block (paint finish)
- 2 - 2" rigid insulation (R-20) (stagger joints)
- Water barrier membrane
- Exterior cladding as per W1

W3 2 HOUR NON-LOADBEARING PARTITION (MBC T-9.10.3.1.A / W6d - 2hr frr / 58 stc)
- 2 - 5/8" UL drywall
- Resilient sound channels
- 2x6's @ 16" o/c
- 3 ½" mineral wool insulation
- 2 - 5/8" UL drywall

W4 TYPICAL SUITE / CORRIDOR PARTITION (MBC T-9.10.3.1.A / W4a - 1hr frr / 51 stc)
- 2 - 5/8" UL drywall (corridor side)
- Resilient sound channels
- 2x6's @ 16" o/c
- 3 ½" mineral wool insulation
- 5/8" UL drywall (int. suite)

W5 TYPICAL SUITE / SUITE PARTY WALL (MBC T-9.10.3.1.A / W13a (sim)- 1hr frr / 58 stc) (ULC W454 - NRC - Socrates (16") / 55 stc)
- 5/8" UL drywall
- 2x4's @ 16" o/c
- 3 ½" mineral wool insulation
- ½" air space
- 7/16" plywood sheathing
- 2x4's @ 16" o/c
- 3 ½" mineral wool insulation
- 5/8" UL drywall

W6 45 MINUTE FIRE RATED PARTITION (MBC T-9.10.3.1.A / W1d - 1hr frr / 32 stc)
- 5/8" UL drywall
- 2x4's @ 16" o/c
- 5/8" UL drywall

W7a&b SUITE / SERVICE ROOM PARTITION
- ½" drywall
- 2x4's @ 16" o/c
- ½" drywall

Note 1 - W7b uses 2x6 studs
Note 2 - add 3 ½" fiberglass sound batts where "S" shown

W8 SHAFT WALL (ULC W452 / 1 hr frr / 39 stc)
- 1" shaft liner type X
- 2 ½" shaftwall studs @ 24" o/c
- 5/8" UL drywall (ptd where exposed)
- Use 'J' shape track top and bottom

W9 STAIR & ELEVATOR SHAFTS - PUBLIC AREAS (MBC T-9.10.3.1.A / B1b - 1hr frr / 50 stc)
- Concrete block (painted where exposed)
- 7/8" metal furring channels @ 24" o/c
- ½" drywall

W10 PLUMBING WALL
- ½" drywall
- 2x4's @ 16" o/c (spaced away from wall as req'd)

W11 SUITE TO STAIR OR ELEVATOR WALL (MBC T-9.10.3.1.A / B10a (sim) - 3hr frr / 56 stc)
- 8" concrete block
- 2x4's @ 16" o/c
- 3 ½" mineral wool insulation
- Resilient sound bars @ 24" o/c
- 2 - 5/8" UL drywall

W12 STAIR / ELEVATOR WALL (MBC T-9.10.3.1.A / B1b - 1hr frr / 50 stc)
- 8" concrete block
- Paint finish where exposed

FLOOR AREA = 5 546 sq. ft.

Consultants
ARCHITECTURAL TECHNOLOGIST
tsquaretechniques@gmail.com
204.771.2436
T-Square Techniques

Project Management
BOUCHARD BROS 2014 LTD

Seal
PROVINCE OF MANITOBA GERALD A. KORZENIOWSKI REGISTERED ARCHITECT 9 Oct. 2025
PROVINCE OF MANITOBA GERALD A. KORZENIOWSKI ARCHITECT INC. No. 539 LICENSED ARCHITECTURAL CORPORATION 9 Oct. 2025

Revisions/Issuance (Recd/Iss)
No. | Description | Date (yr/o/d) | Drawn | Checked

Architect
GERALD A. KORZENIOWSKI ARCHITECT INC.
20 VALCOURT WAY
BRANDON, MB. R7C 0B3
PHONE: (204) 832-8666

Project Title
520 WILLIAM AVE.
MULTI - FAMILY
WINNIPEG MB

ISSUED FOR CONSTRUCTION

Drawn By

Sheet Title
FIFTH FLOOR PLAN

Date 09/10/2025 | Scale 1/4" = 1' - 0"

Version 9.29 | Sheet Number **A.5**

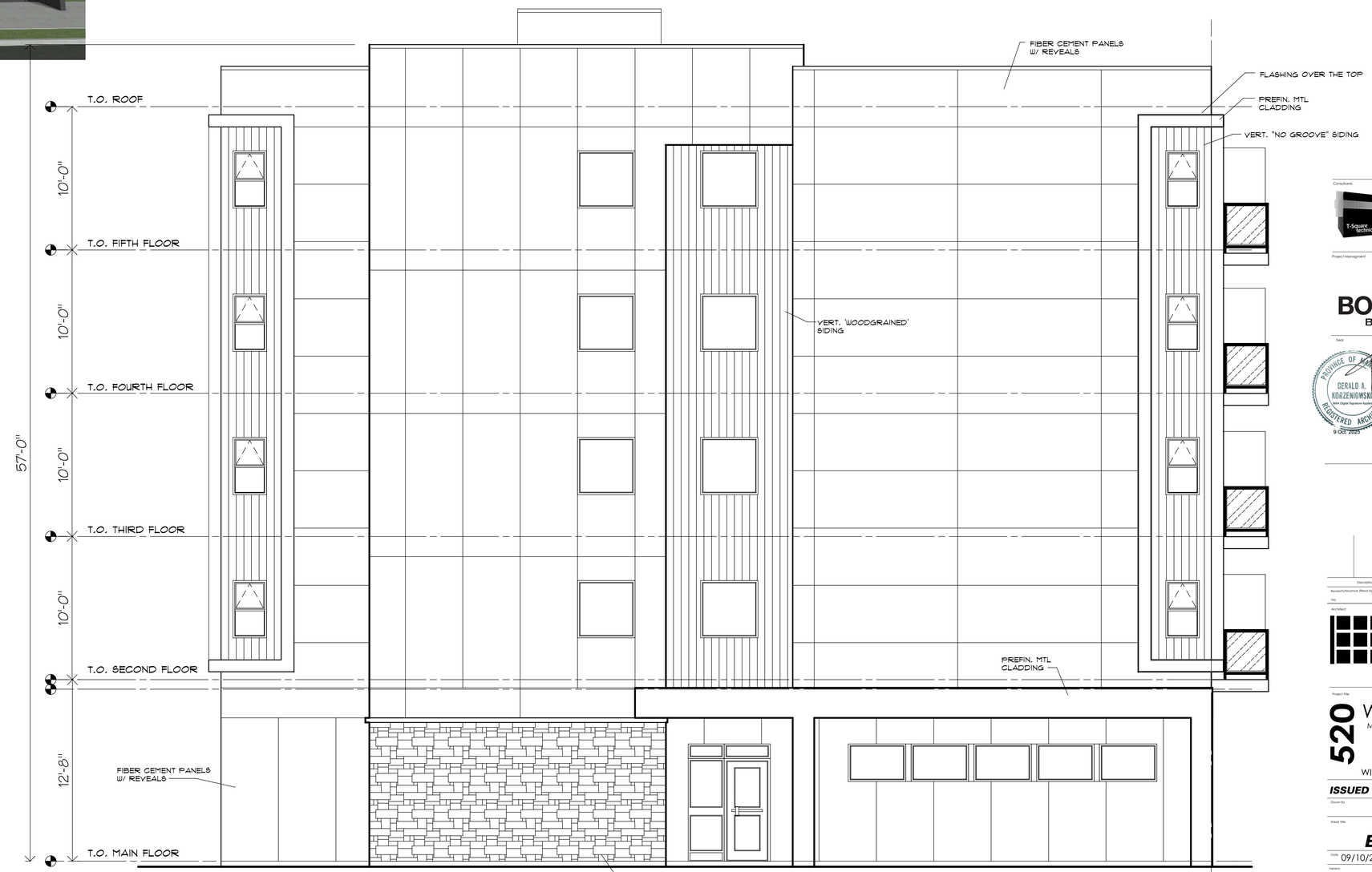

NORTH ELEVATION

Consultants

ARCHITECTURAL TECHNOLOGIST

tsquaretechniques@gmail.com
204.771.2436

Project Management

BOUCHARD
BROS 2014 LTD

Seal

Revisions/Issuance (Record Set)			
Description	Date (m/d/y)	Drawn	Checked

Inc.

Architect

GERALD A. KORZENIOWSKI
ARCHITECT INC.

20 VALCOURT WAY
BRANDON, MB. R7C 0B3
PHONE: (204) 832-8666

Project Title

520 WILLIAM AVE.
MULTI - FAMILY

WINNIPEG MB

ISSUED FOR CONSTRUCTION

Drawn By

Sheet Title

NORTH ELEVATION

Date 09/10/2025 Scale 1/4" = 1' - 0"

Version 9.29 Sheet Number **A.6**

WEST ELEVATION

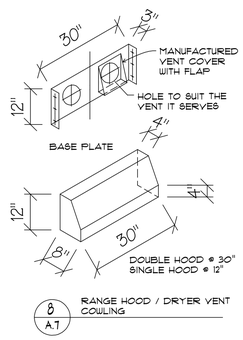

Consultants

ARCHITECTURAL TECHNOLOGIST
tsquaretechniques@gmail.com
204.771.2436

Project Management

BOUCHARD
BROS 2014 LTD

Seal

PROVINCE OF MANITOBA
GERALD A. KORZENIOWSKI
REGISTERED ARCHITECT
9 Oct. 2025

MANITOBA ASSOCIATION OF ARCHITECTS
GERALD A. KORZENIOWSKI
ARCHITECT INC.
No. 623
9 Oct. 2025

Description	Date (m/d/y)	Drawn	Checked

Revisions/Issuance (Revid Up)

Inc.

Architect

GERALD A. KORZENIOWSKI ARCHITECT INC.
20 VALCOURT WAY
BRANDON, MB. R7C 0B3
PHONE: (204) 832-8666

Project Title

520 WILLIAM AVE.
MULTI - FAMILY
WINNIPEG MB

ISSUED FOR CONSTRUCTION

Drawn By

Sheet Title

WEST ELEVATION

Date 09/10/2025 Scale 1/4" = 1' - 0"

Version 9.29 Sheet Number **A.7**

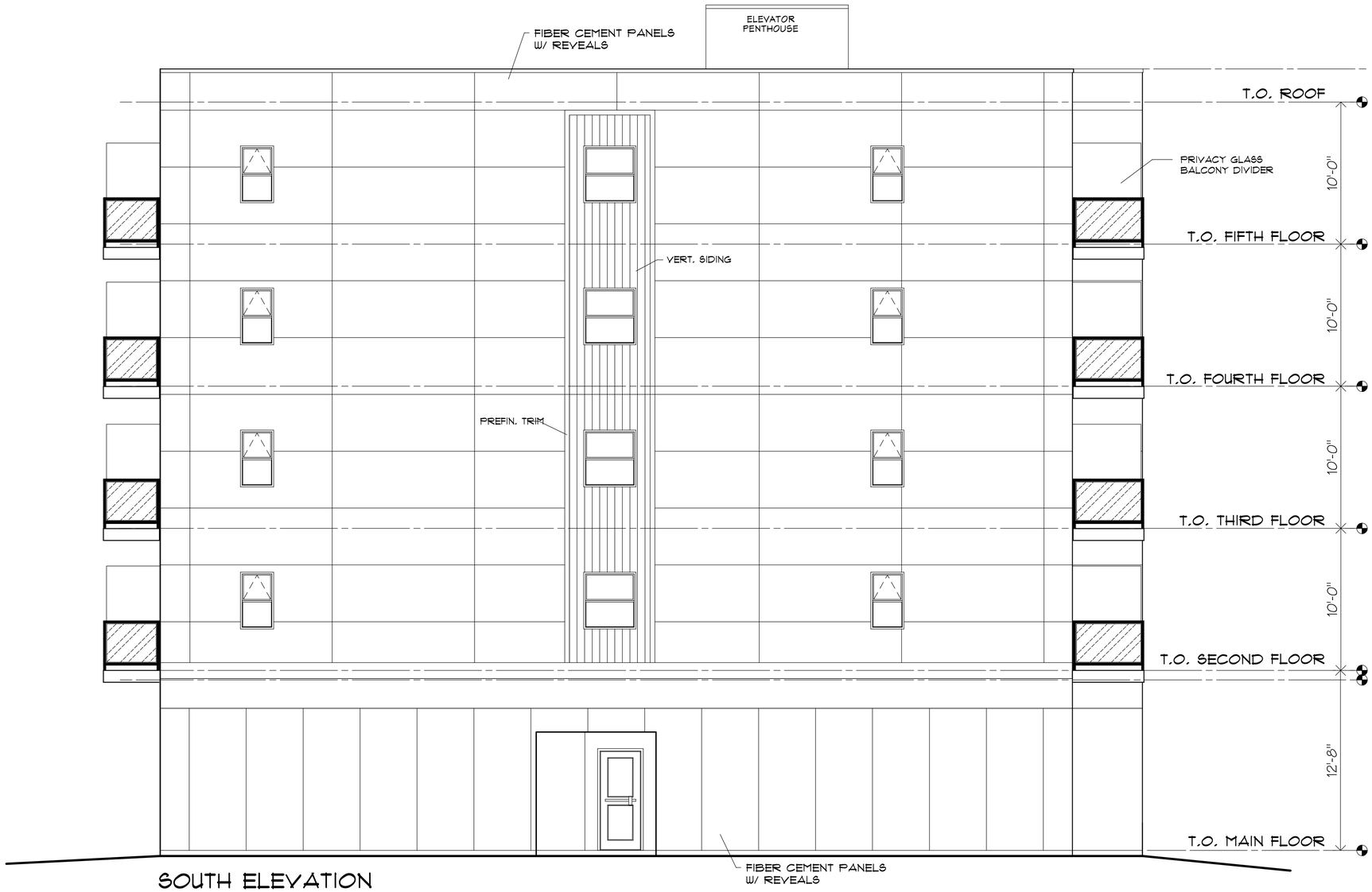

SOUTH ELEVATION

Consultants

ARCHITECTURAL TECHNOLOGIST
tsquaretechniques@gmail.com
204.771.2436

Project Management

BOUCHARD
BROS 2014 LTD

Seal

PROVINCE OF MANITOBA
GERALD A. KORZENIOWSKI
Valid Digital Signature Applied
REGISTERED ARCHITECT
9 Oct. 2025

GERALD A. KORZENIOWSKI ARCHITECT INC.
No. 0393
9 Oct. 2025

Description	Date (m/d/y)	Drawn	Checked

Revisions/Issuance (Permit Stp)

Info.

Architect

GERALD A. KORZENIOWSKI
ARCHITECT INC.

20 VALCOURT WAY
BRANDON, MB, R7C 0B3
PHONE: (204) 832-8666

Project Title

520 WILLIAM AVE.
MULTI - FAMILY

WINNIPEG MB

ISSUED FOR CONSTRUCTION

Drawn By

Sheet Title

SOUTH ELEVATION

Date 09/10/2025 Scale 1/4" = 1' - 0"

Version 9.29 Sheet Number **A.8**

EAST ELEVATION

Consultants

T-Square techniques

ARCHITECTURAL TECHNOLOGIST

tsquaretechniques@gmail.com
204.771.2436

Project Management

BOUCHARD
BROS 2014 LTD

Seal

PROVINCE OF MANITOBA
GERALD A. KORZENIOWSKI
Add Digital Signature Number
REGISTERED ARCHITECT
9 Oct. 2025

GERALD A. KORZENIOWSKI ARCHITECT INC.
No. 0351
REGISTERED ARCHITECTURAL CORPORATION
9 Oct. 2025

No.	Revision/Issuance (Reason for)	Description	Date (yy/yy)	Drawn	Checked

Architect

GERALD A. KORZENIOWSKI ARCHITECT INC.

20 VALCOURT WAY
BRANDON, MB. R7C 0B3
PHONE: (204) 832-8666

Project Title

520 WILLIAM AVE.
MULTI - FAMILY

WINNIPEG MB

ISSUED FOR CONSTRUCTION

Drawn By

Sheet Title

EAST ELEVATION

Date 09/10/2025 Scale 1/4" = 1' - 0"

Version 9.29 Sheet Number **A.9**

WALL TYPES:

ALL PENETRATIONS IN FIRE RATED WALLS SHALL BE SUITABLY FIRE STOPPED.

WALL TYPES

FW1 TYPICAL FOUNDATION WALL
- 8"-12" Concrete (see structural)
- Damp proof coating
- 2 - 2" rigid insulation (R-20) (stagger joints)
- 1/2" GWB

W1 TYPICAL EXTERIOR WALL
- 5/8" UL drywall
- 6mil CGSB Poly Vapour Barrier
- 2x6 or 2x8 wood studs (see structural)
- R22 or R28 batt insulation
- 7/16" OSB sheathing
- Water barrier membrane
- Exterior finish:

a) ½" x 3" plywood strips @ 24" o/c
½" James Hardie cementitious panels

Or

b) ½" x 3" plywood strips @ 24" o/c
½" James Hardie cementitious
Horizontal lapped siding

Or

c) Wire mesh to suit
Thinset bedding compound
Cultured Stone Veneer

Or

d) Resilient channels @ 24" o/c
Vertical metal cladding

W2 EXTERIOR WALLS (Concrete Block)
- 8" concrete block (paint finish)
- 2 - 2" rigid insulation (R-20) (stagger joints)
- Water barrier membrane
- Exterior cladding as per W1

W3 2 HOUR NON-LOADBEARING PARTITION
(MBC T-9.10.3.1.A / W6d - 2hr frr / 58 stc)
- 2 - 5/8" UL drywall
- Resilient sound channels
- 2x6's @ 16" o/c
- 3 ½" mineral wool insulation
- 2 - 5/8" UL drywall

W4 TYPICAL SUITE / CORRIDOR PARTITION
(MBC T-9.10.3.1.A / W4a - 1hr frr / 51 stc)
- 2 - 5/8" UL drywall (corridor side)
- Resilient sound channels
- 2x6's @ 16" o/c
- 3 ½" mineral wool insulation
- 5/8" UL drywall (int. suite)

W5 TYPICAL SUITE / SUITE PARTY WALL
(MBC T-9.10.3.1.A / W13a (sim)- 1hr frr / 58 stc)
(ULC W454 - NRC - Socrates (16") / 55 stc)
- 5/8" UL drywall
- 2x4's @ 16" o/c
- 3 ½" mineral wool insulation
- ½" air space
- 7/16" plywood sheathing
- 2x4's @ 16" o/c
- 3 ½" mineral wool insulation
- 5/8" UL drywall

W6 45 MINUTE FIRE RATED PARTITION
(MBC T-9.10.3.1.A / W1d - 1hr frr / 32 stc)
- 5/8" UL drywall
- 2x4's @ 16" o/c
- 5/8" UL drywall

W7a&b SUITE / SERVICE ROOM PARTITION
- ½" drywall
- 2x4's @ 16" o/c
- ½" drywall
Note 1 - W7b uses 2x6 studs
Note 2 - add 3 ½" fiberglass sound batts where "S" shown

W8 SHAFT WALL
(ULC W452 / 1 hr frr / 39 stc)
- 1" shaft liner type X
- 2 ½" shaftwall studs @ 24" o/c
- 5/8" UL drywall (ptd where exposed)
- Use 'J' shape track top and bottom

W9 STAIR & ELEVATOR SHAFTS - PUBLIC AREAS
(MBC T-9.10.3.1.A / B1b - 1hr frr / 50 stc)
- Concrete block (painted where exposed)
- ½" resilient steel channels @ 24" o/c
- ½" drywall

W10 PLUMBING WALL
- ½" drywall
- 2x4's @ 16" o/c (spaced away from wall as req'd)

W11 SUITE TO STAIR OR ELEVATOR WALL
(MBC T-9.10.3.1.A / B10a (sim) - 3hr frr / 56 stc)
- 8" concrete block
- 2x4's @ 16" o/c
- 3 ½" mineral wool insulation
- Resilient sound bars @ 24" o/c
- 2 - 5/8" UL drywall

W12 STAIR / ELEVATOR WALL
(MBC T-9.10.3.1.A / B1b - 1hr frr / 50 stc)
- 8" concrete block
- Paint finish where exposed

W13 PARAPET EXTERIOR WALL
- Prefin. Mtl. wall finish
- Wall membrane
- 7/16" OSB sheathing
- 2x6 Wd. Studs @ 24" o.c.
- 7/16" OSB sheathing
- Wall membrane
- Exterior finish:

a) ½" x 3" plywood strips @ 24" o/c
½" James Hardie cementitious panels

Or

b) ½" x 3" plywood strips @ 24" o/c
½" James Hardie cementitious
Horizontal lapped siding

Or

c) Wire mesh to suit
Thinset bedding compound
Cultured Stone Veneer

Or

d) Resilient channels @ 24" o/c
Vertical metal cladding

WALL TYPE LEGEND

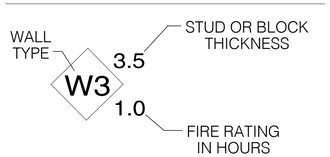

FLOOR TYPES:

F1 TYPICAL BASEMENT FLOOR
- Concrete slab with sealant (see structural)
- 10mil poly vapour barrier
- Compacted gravel (see structural)

F2 TYPICAL MAIN & SECOND FLOOR
(2 hr frr @ 2nd Flr)
(MBC Appendix D: T-2.2.1.-A Prestressed Concrete Floor Slabs)
- Finish flooring (& underlay, if applicable)
- 1 1/2" cementitious leveling coat
- 8" concrete hollow core slabs
- 2nd FLR: interior ceiling finishes as per dwgs/schedule

F3 TYPICAL 3rd, 4th & 5th FLOORS
(MBC T-9.10.3.1.B / F9d - 1hr frr / 54 stc / 48 IIC)
- Finish flooring (& underlay, if applicable)
- ¾" cementitious leveling coat
- 19/32" T&G OSB sheathing
- Flat chord floor trusses (see structural)
- 6" fiberglass sound batts
- Resilient metal channels @ 24" o/c
- 2 - 5/8" UL drywall

F4 TYPICAL 3rd, 4th & 5th CORRIDOR FLOORS
(MBC T-9.10.3.1.B / F4a
- Finish flooring (& underlay, if applicable)
- ¾" cementitious leveling coat
- 19/32" T&G OSB sheathing
- 2X8 #2 SPF JOISTS (see structural)
- 2 - 5/8" UL drywall
- Airspace
- LAT ceiling finish

ROOF TYPES:

R1 TYPICAL ROOF (1 hr frr)
(MBC Appendix D: T-D-2.3.4.-B)
- 2 ply modified bitumen peel & stick roof membrane
- ½" protection board
- R-35 XPS rigid insulation
- 19/32" OSB T&G sheathing
- Flat chord roof trusses or 2x8's @ 16" o/c (see structural)
- 2 - 5/8" UL drywall

R2 CANOPY ROOF (1 hr frr)
(MBC Appendix D: T-D-2.3.4.-B)
- 2 ply modified bitumen peel & stick roof membrane
- 19/32" OSB T&G Sheathing
- 2x8's @ 16" o/c
- 2 - 5/8" UL drywall (exterior grade)
- Reverse rolled, 28ga Pro-Rib prefinished metal cladding

R3 TYPICAL BALCONY (1 hr frr)
(MBC Appendix D: T-D-2.3.4.-B)
- ¼" aluminum 'checker-plate' pattern
- Water barrier membrane
- 2x8's @ 16" o/c (cantilevered - see structural)
- 2 - 5/8" UL drywall (exterior grade)
- Reverse rolled, 28ga Pro-Rib prefinished metal cladding

R4 ACCESSIBLE BALCONY (1 hr frr)
(MBC Appendix D: T-D-2.3.4.-B)
- 2x6 pressure treated 2x6's on flat @ 5 5/8" o/c
- 2x4 shims @ 24" o/c
- ½" x 3" x 3" rubber gaskets @ maximum 24" intervals
- 2 ply modified bitumen peel & stick roof membrane
- 19/32" OSB T&G sheathing
- 2x8's @ 16" o/c
- 2 - 5/8" UL drywall (exterior grade)
- Reverse rolled, 28ga Pro-Rib prefinished metal cladding

ASSEMBLY NOTES:

1. ALL 5/8" G.B. SHALL BE TYPE 'X' MATERIAL.
2. FLOORS ARE RATED TO THE UNDERSIDE OF THE STRUCTURE
3. SUITES ARE SEPARATED FROM EACH OTHER AND THE REMAINDER OF THE BUILDING WITH A 1.0 HR. FIRE SEPARATION.
4. ALL OTHER REQUIRED FIRE SEPARATIONS SHOWN ARE 45 MINUTES MIN. UNLESS OTHERWISE NOTED.

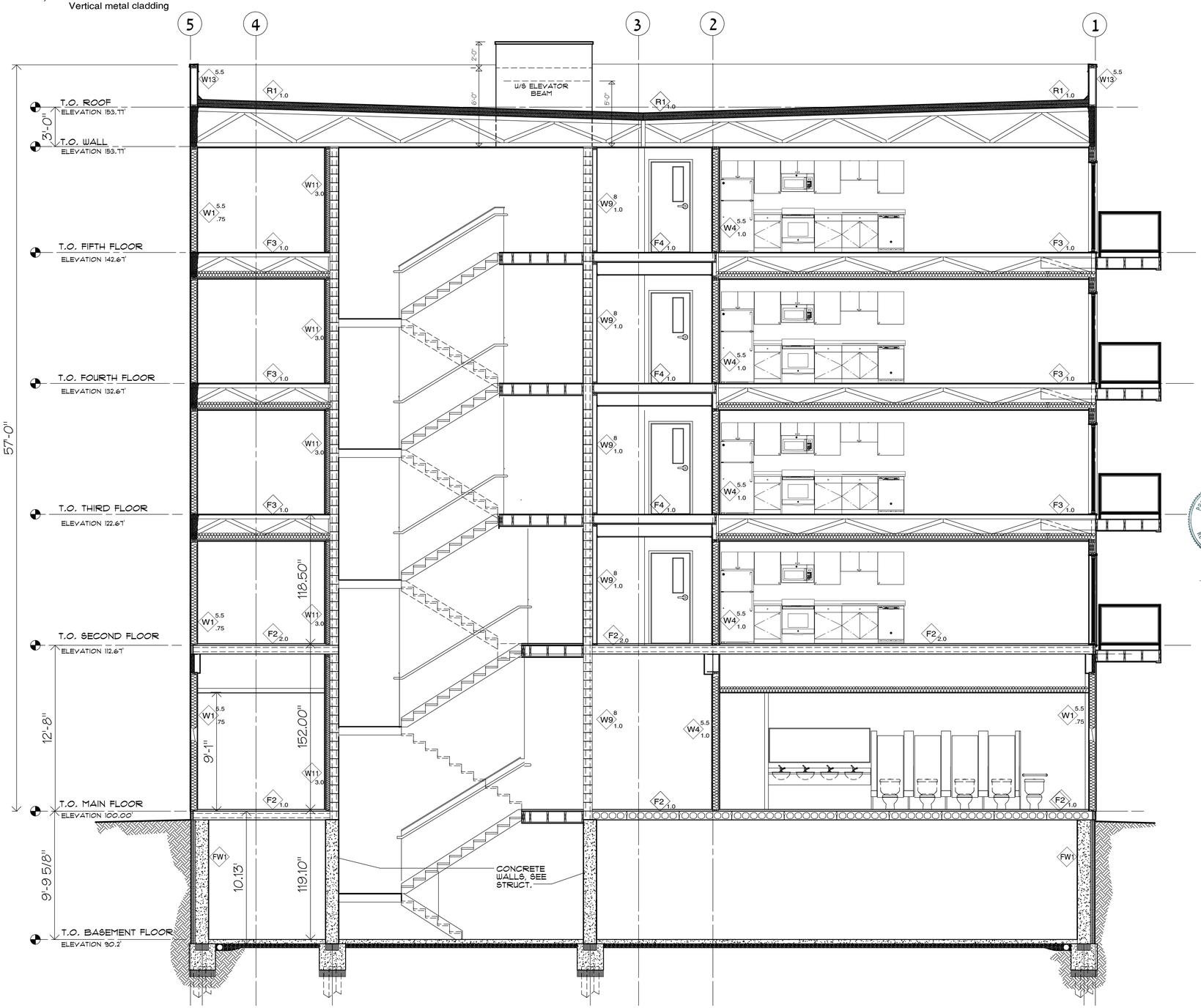

Consultants
ARCHITECTURAL TECHNOLOGIST
tsquaretechniques@gmail.com
204.771.2436

Project Management
BOUCHARD BROS 2014 LTD

Seal
PROVINCE OF MANITOBA GERALD A. KORZENIOWSKI REGISTERED ARCHITECT 9 Oct. 2025
GERALD A. KORZENIOWSKI PROFESSIONAL ARCHITECT INC. No. 033 REGISTERED ARCHITECTURAL CORPORATION 9 Oct. 2025

Revision/Issuance (Reason for issue)	Description	Date (m/d/y)	Drawn	Checked

Incl.

Architect
GERALD A. KORZENIOWSKI ARCHITECT INC.
20 VALCOURT WAY
BRANDON, MB. R7C 0B3
PHONE: (204) 832-8666

Project Title
520 WILLIAM AVE.
MULTI - FAMILY
WINNIPEG MB

ISSUED FOR CONSTRUCTION

Drawn By

Sheet Title
BUILDING SECTION ONE

Date 09/10/2025 Scale 1/4" = 1' - 0"

Version 9.29 Sheet Number **A.10**

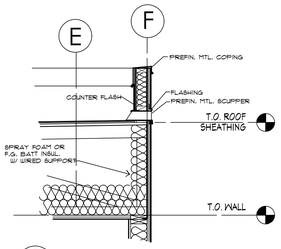

2 A.11 SCUPPER DETAIL

SCALE: 3/4" = 1' - 0"

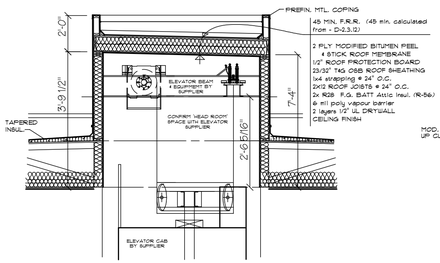

3 A.11 ELEVATOR PENTHOUSE

SCALE: 3/4" = 1' - 0"

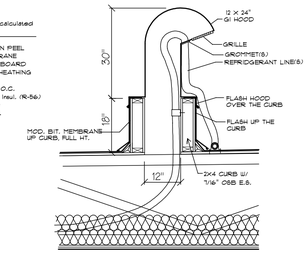

4 A.11 ROOF VENT

SCALE: 3/4" = 1' - 0"

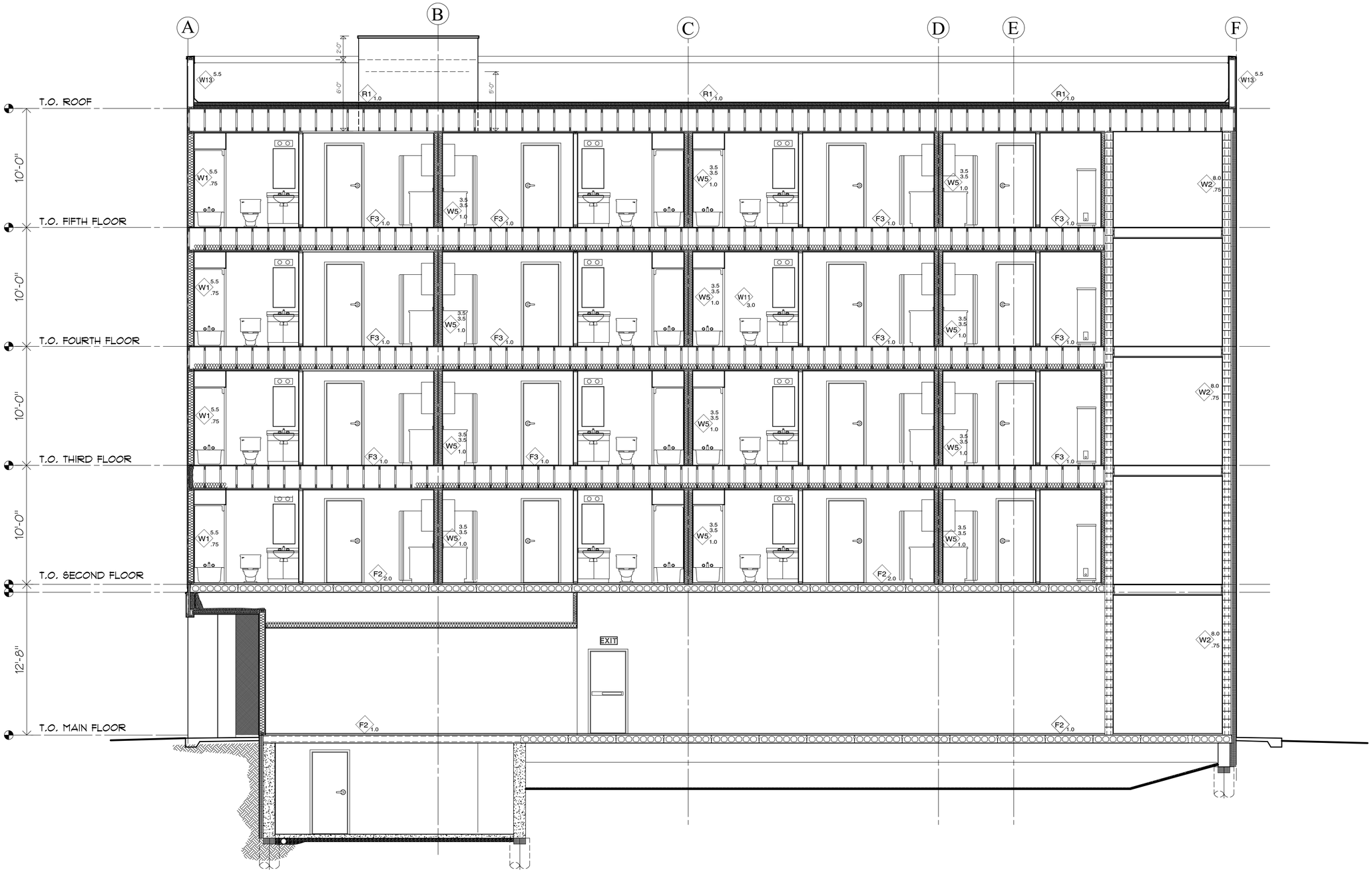

Consultants

ARCHITECTURAL TECHNOLOGIST

tsquaretechniques@gmail.com
204.771.2436

Project Management

BOUCHARD
BROS 2014 LTD

Seal

PROVINCE OF MANITOBA
GERALD A. KORZENIOWSKI
Using Digital Signature Applicator
REGISTERED ARCHITECT
9 Oct. 2025

GERALD A. KORZENIOWSKI ARCHITECT INC.
No. 6020
PROVINCE OF MANITOBA
REGISTERED ARCHITECTURAL CORPORATION
9 Oct. 2025

No.	Revision/Revision# (Rev#/dd)	Date (yy/dd/yy)	Drawn	Checked
	Description			

Architect

GERALD A. KORZENIOWSKI ARCHITECT INC.

20 VALCOURT WAY
BRANDON, MB. R7C 0B3
PHONE: (204) 832-8666

Project Title

520 WILLIAM AVE.
MULTI - FAMILY

WINNIPEG MB

ISSUED FOR CONSTRUCTION

Drawn By

Sheet Title

BUILDING SECTION TWO

Date 09/10/2025 Scale 1/4" = 1' - 0"

Version 9.29 Sheet Number **A.11**

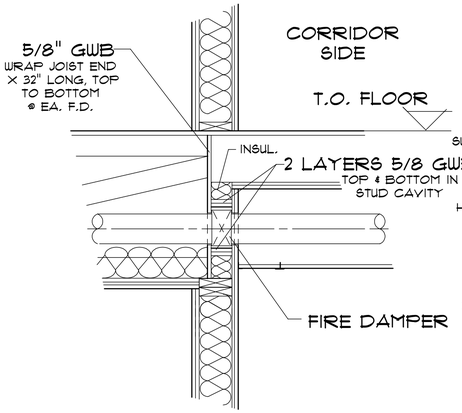

1. TOTAL OPENING TO BE LESS THAN 930 cm / 144 SQ. IN.
OR
2. TOTAL OPENINGS TO BE LESS THAN 1% OF THE TOTAL FIRE COMPARTMENT THEY ARE IN.
3. WHERE FRAMING MEMBERS EXCEED 400mm / 16" SPACINGS AND OPENINGS HAVE DIMENSIONS GREATER THAN 150mm / 6" THE OPENING REQUIRES INTERMEDIATE SUPPORT.

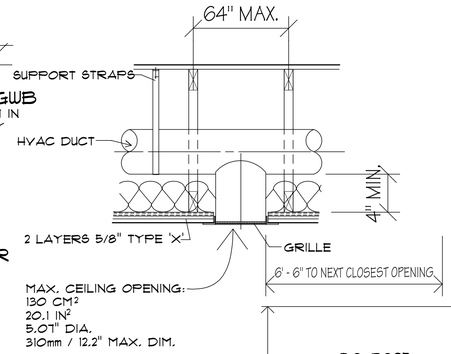

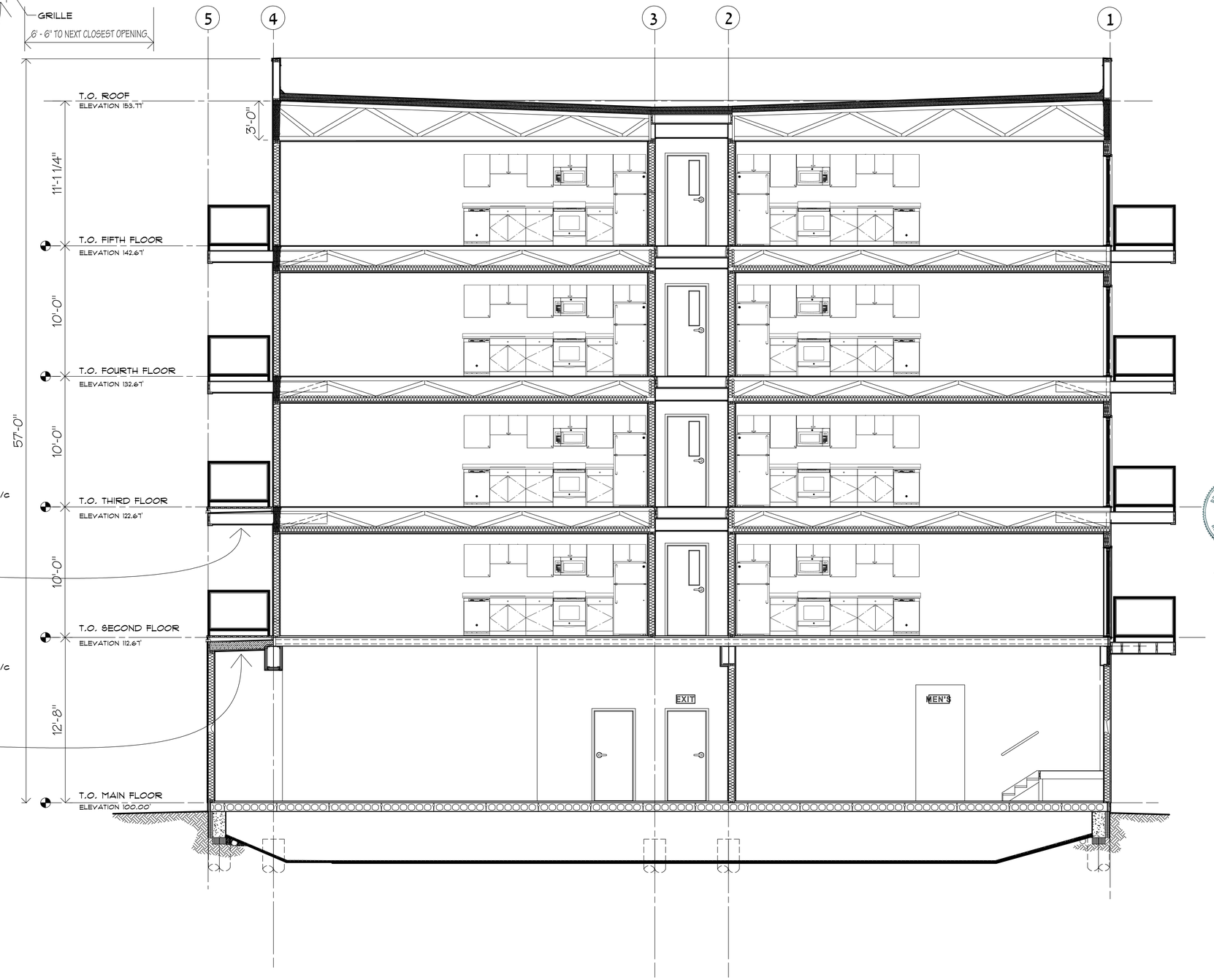

R5 ACCESSIBLE BALCONY (1 hr frr)
(MBC Appendix D: T-D-2.3.4.-B)
- 2x6 pressure treated 2x6's on flat @ 5 5/8" o/c
- 2x4 shims @ 24" o/c
- ½" x 3" x 3" rubber gaskets @ maximum 24" intervals
- 2 ply modified bitumen peel & stick roof membrane
- 19/32" OSB T&G sheathing
- Remainder of the assembly is the same as a non - accessible balcony?

R4 ACCESSIBLE BALCONY (1 hr frr)
(MBC Appendix D: T-D-2.3.4.-B)
- 2x6 pressure treated 2x6's on flat @ 5 5/8" o/c
- 2x4 shims @ 24" o/c
- ½" x 3" x 3" rubber gaskets @ maximum 24" intervals
- 2 ply modified bitumen peel & stick roof membrane
- 19/32" OSB T&G sheathing
- 2x8's @ 16" o/c
- 2 - 5/8" UL drywall (exterior grade)

Consultants

ARCHITECTURAL TECHNOLOGIST
tsquaretechniques@gmail.com
204.771.2436

Project Management

BOUCHARD
BROS 2014 LTD

Seal

PROVINCE OF MANITOBA
GERALD A. KORZENIOWSKI
REGISTERED ARCHITECT
9 Oct. 2025

GERALD A. KORZENIOWSKI
ARCHITECT INC.
No. 820
PROFESSIONAL ARCHITECTURAL CORPORATION
9 Oct. 2025

No.	Description	Date (yr/m/d)	Drawn	Checked
Revision/Revoca				

Architect

GERALD A. KORZENIOWSKI
ARCHITECT INC.
20 VALCOURT WAY
BRANDON, MB. R7C 0B3
PHONE: (204) 832-8666

Project Title

520 WILLIAM AVE.
MULTI - FAMILY
WINNIPEG MB

ISSUED FOR CONSTRUCTION

Drawn By

Sheet Title

BUILDING SECTION THREE

Date 09/10/2025 Scale 1/4" = 1' - 0"

Version 9.29 Sheet Number **A.12**

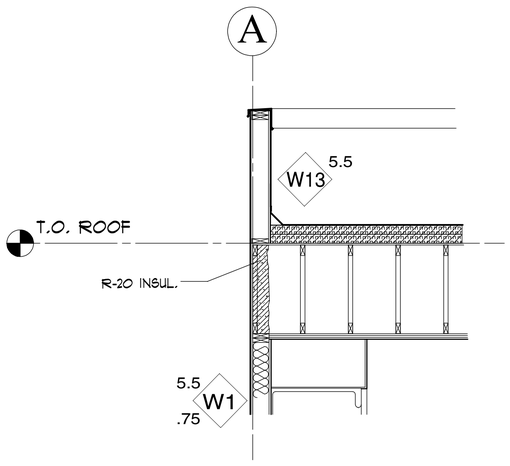

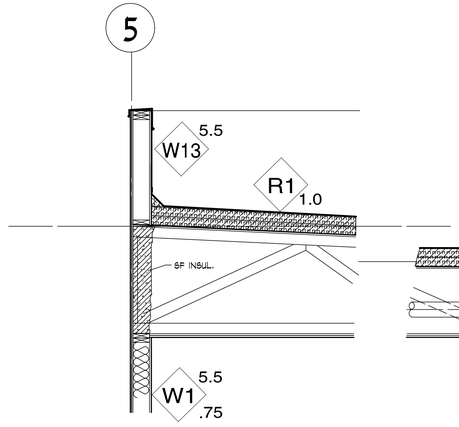

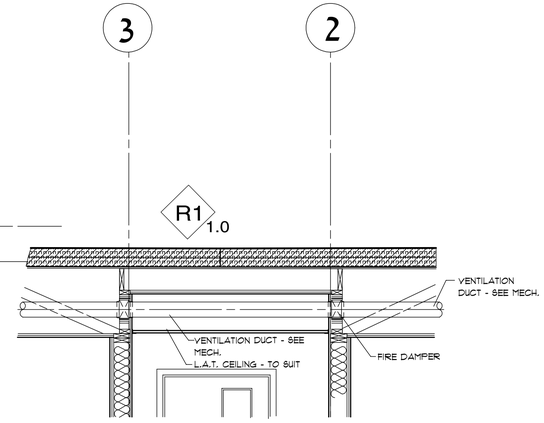

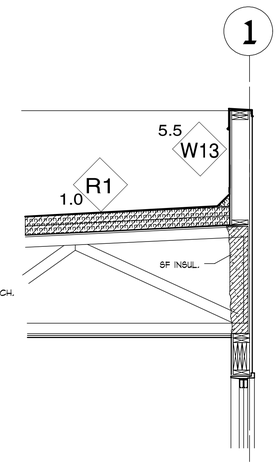

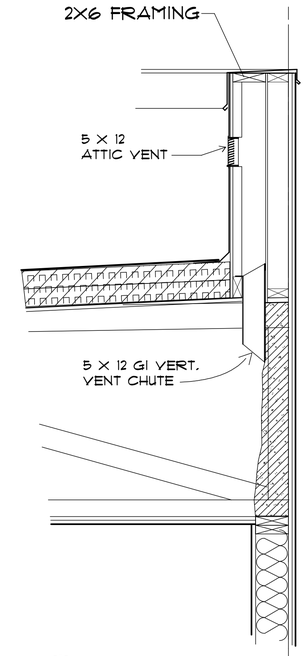

6 A.13 ROOF VENT @ PARAPET

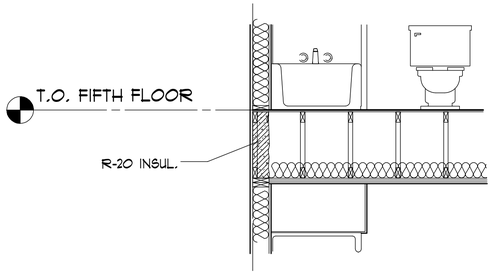

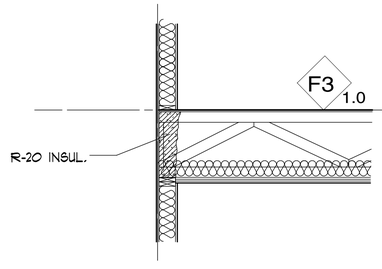

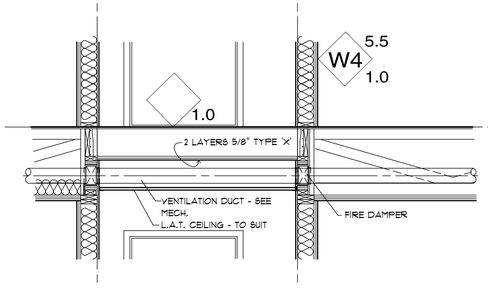

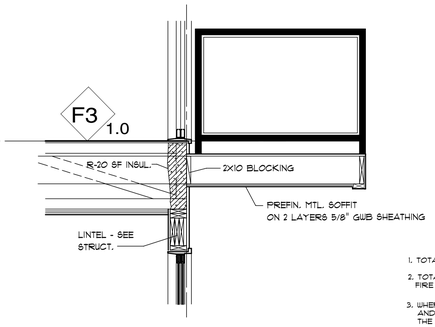

1. TOTAL OPENING TO BE LESS THAN 930 cm / 144 SQ. IN.
OR
2. TOTAL OPENINGS TO BE LESS THAN 1% OF THE TOTAL FIRE COMPARTMENT THEY ARE IN.

3. WHERE FRAMING MEMBERS EXCEED 400mm / 16" SPACINGS AND OPENINGS HAVE DIMENSIONS GREATER THAN 150mm / 6" THE OPENING REQUIRES INTERMEDIATE SUPPORT.

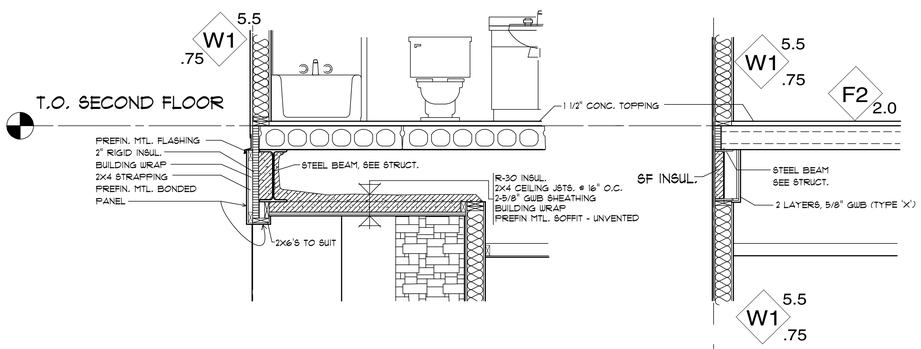

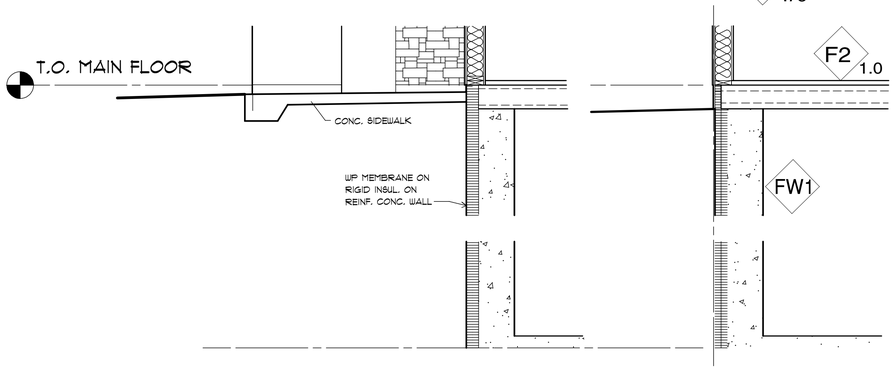

1 A.13 WALL SECTION - ENTRY
SCALE: 1/2" = 1' - 0"

2 A.13 WALL SECTION - SIDE WALL
SCALE: 1/2" = 1' - 0"

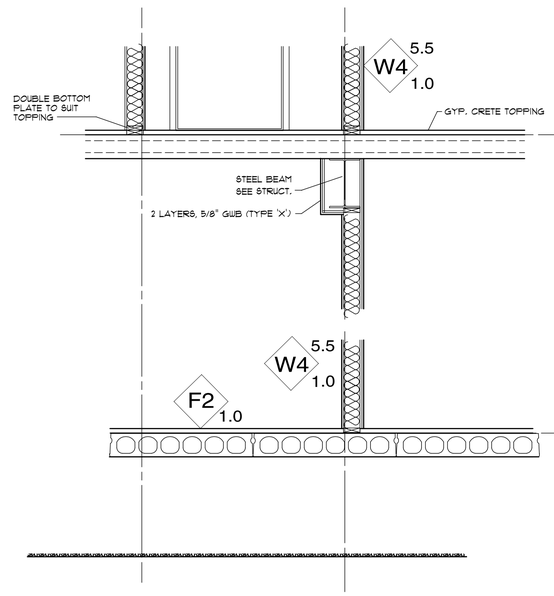

3 A.13 WALL SECTION - CORRIDOR
SCALE: 1/2" = 1' - 0"

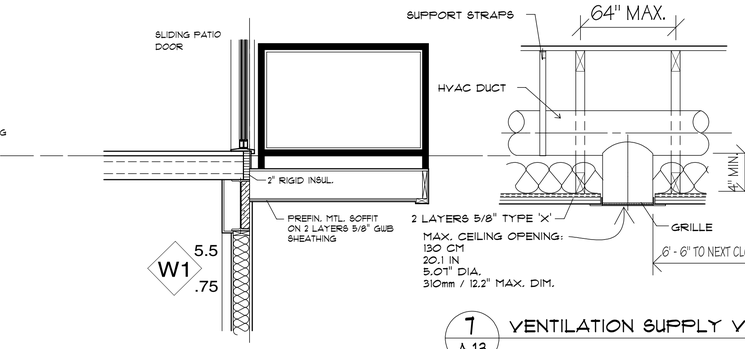

7 A.13 VENTILATION SUPPLY VENT

4 A.13 WALL SECTION - WEST WALL
SCALE: 1/2" = 1' - 0"

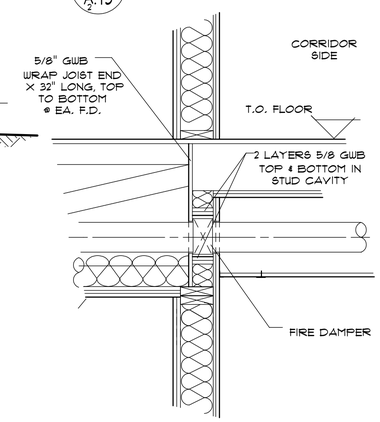

8 A.13 CORRIDOR WALL AT FIRE DAMPER

Consultants

ARCHITECTURAL TECHNOLOGIST
tsquaretechniques@gmail.com
204.771.2436

Project Management

BOUCHARD
BROS 2014 LTD

Seal

PROVINCE OF MANITOBA GERALD A. KORZENIOWSKI REGISTERED ARCHITECT 9 Oct. 2025

CITY OF WINNIPEG GERALD A. KORZENIOWSKI ARCHITECT INC. No. 033 APPROVED ARCHITECTURAL DESCRIPTION 9 Oct. 2025

No.	Description	Date (mm/yy)	Drawn	Checked
Revision/Revoice (Recd Up)				

Architect

GERALD A. KORZENIOWSKI ARCHITECT INC.
20 VALCOURT WAY
BRANDON, MB. R7C 0B3
PHONE: (204) 832-8666

Project Title

520 WILLIAM AVE.
MULTI - FAMILY
WINNIPEG MB

ISSUED FOR CONSTRUCTION

Drawn By

Sheet Title

WALL SECTIONS

Date 09/10/2025 Scale 1/4" = 1' - 0"

Version 9.29 Sheet Number **A.13**

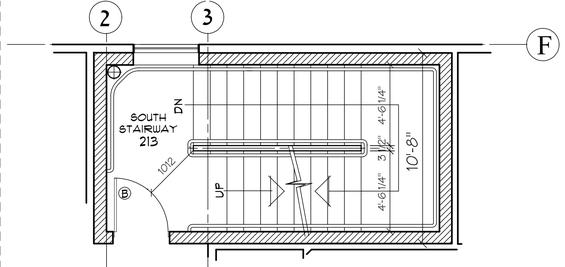

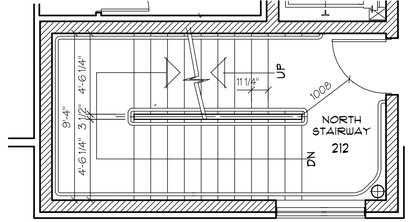

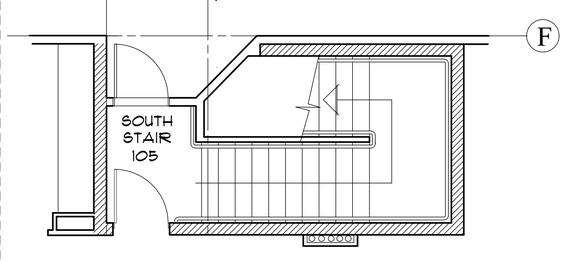

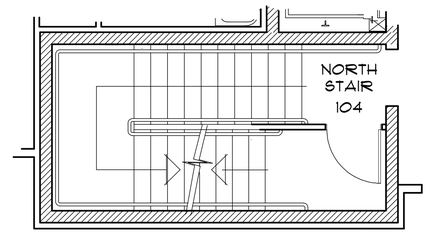

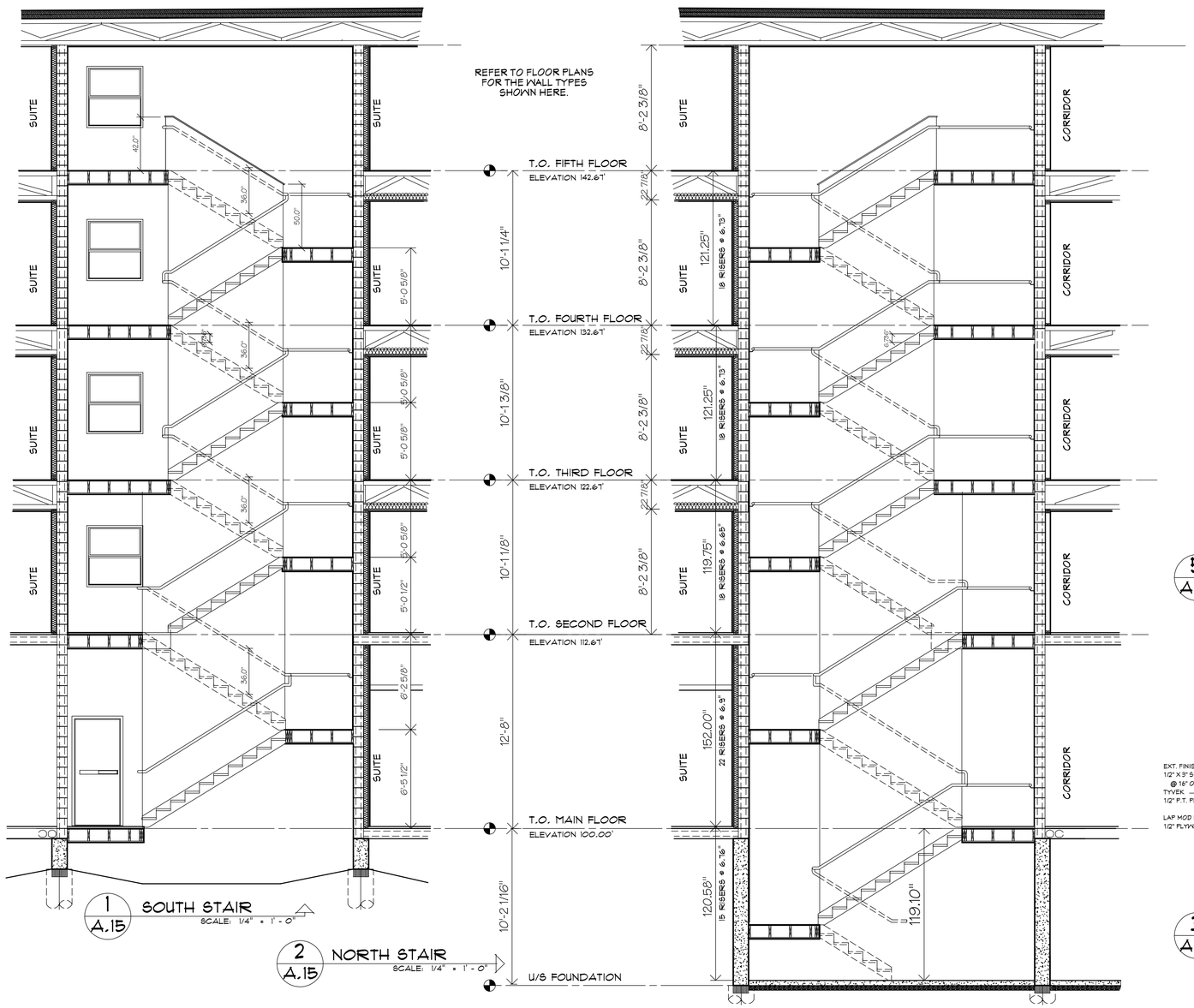

1 A.15 SOUTH STAIR
SCALE: 1/4" = 1' - 0"

2 A.15 NORTH STAIR
SCALE: 1/4" = 1' - 0"

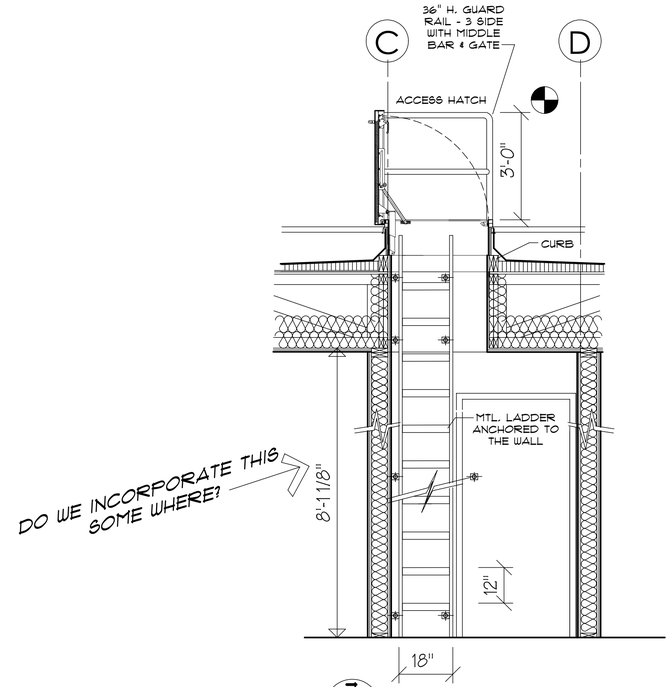

7 A.15 ROOF ACCESS LADDER
SCALE: 1/2" = 1' - 0"

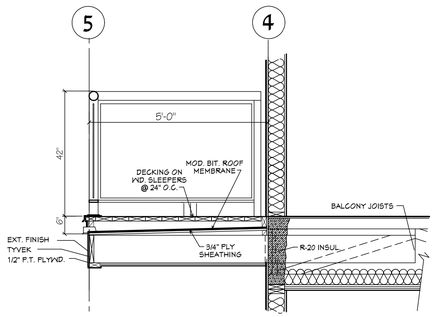

5 A.15 ACCESSIBLE BALCONY SECTION- 3rd. TO 5th. FLOORS
SCALE: 1/2" = 1' - 0"

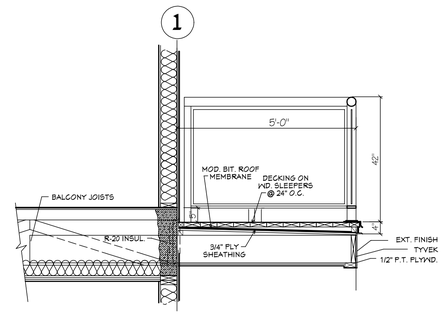

5 A.15 BALCONY SECTION
SCALE: 1/2" = 1' - 0"

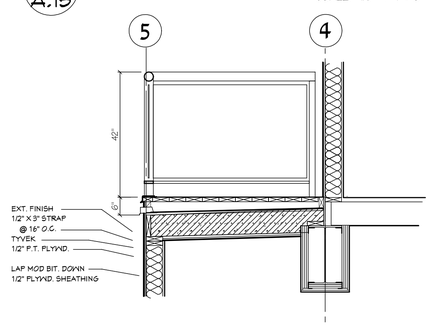

3 A.15 ACCESSIBLE BALCONY SECTION - 2nd. FLOOR
SCALE: 1/2" = 1' - 0"

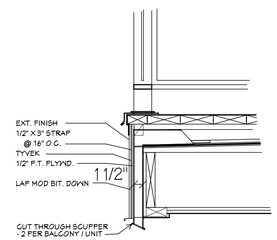

6 A.15 BALCONY SCUPPER
PROVIDE 2 SCUPPERS MIN. PER UNIT / BALCONY

Consultants

ARCHITECTURAL TECHNOLOGIST
tsquaretechniques@gmail.com
204.771.2436

Project Management

BOUCHARD BROS 2014 LTD

Seal

PROVINCE OF MANITOBA GERALD A. KORZENIOWSKI REGISTERED ARCHITECT 9 Oct. 2025

GERALD A. KORZENIOWSKI ARCHITECT INC. No. 823 REGISTERED ARCHITECTURAL CORPORATION 9 Oct. 2025

Description	Date (m/d/y)	Drawn	Checked

Revision/Issuance (Reason for)

Inc.

Architect

GERALD A. KORZENIOWSKI ARCHITECT INC.
20 VALCOURT WAY
BRANDON, MB. R7C 0B3
PHONE: (204) 832-8666

Project Title

520 WILLIAM AVE.
MULTI - FAMILY
WINNIPEG MB

ISSUED FOR CONSTRUCTION

Drawn By

STAIR & BALCONY DETAILS

Date 09/10/2025 Scale 1/4" = 1' - 0"

Version 9.29 Sheet Number **A.14**

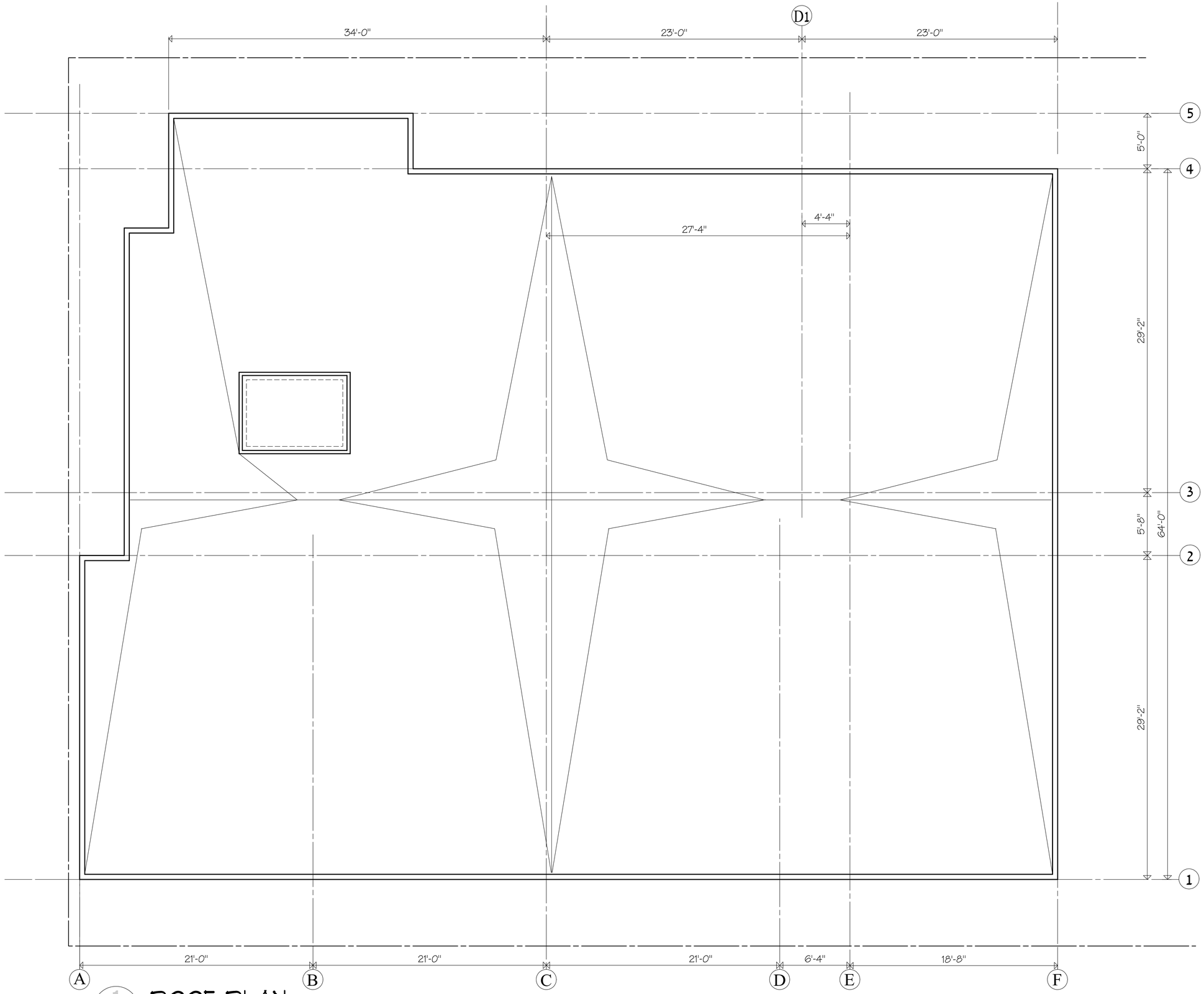

1
A.15

ROOF PLAN

SCALE: 1/4" = 1' - 0"

Consultants

ARCHITECTURAL TECHNOLOGIST

tsquaretechniques@gmail.com
204.771.2436

Project Management

BOUCHARD
BROS 2014 LTD

Seal

PROVINCE OF MANITOBA
GERALD A. KORZENIOWSKI
Using Digital Signature Applicator
REGISTERED ARCHITECT
9 Oct. 2025

GERALD A. KORZENIOWSKI ARCHITECT INC.
No. 223
REGISTERED ARCHITECTURAL CORPORATION
9 Oct. 2025

Description	Date (m/d/y)	Drawn	Checked

Revisions/Issuance (Period 02)

Incl.

Architect

GERALD A. KORZENIOWSKI
ARCHITECT INC.

20 VALCOURT WAY
BRANDON, MB. R7C 0B3
PHONE: (204) 832-8666

Project Title

520 WILLIAM AVE.
MULTI - FAMILY

WINNIPEG MB

ISSUED FOR CONSTRUCTION

Drawn By

Sheet Title

ROOF PLAN

Date 09/10/2025 Scale 1/4" = 1' - 0"

Version 9.29 Sheet Number **A.15**

DOOR NO.	ROOM	FRAME SIZE	TYPE	FINISH	ELEV	TYPE	FINISH	HDWE	FRR	REMARKS
LOWER LEVEL										
DB01	108 N. STAIR	3'-0" x 7'-0" x 1 3/4"	HM	PT	A	WLD	PT	11	3/4 hr	
DB02	CRAWL SPACE	3'-0" x 3'-0" x 1 3/4"	HM	PT	F	WLD	PT	11	3/4 hr	
GROUND FLOOR										
D100	SUITE E - 100	3'-0" x 7'-0" x 1 3/4"	SC	PT	A	KN-DN	PT	1	20 min	
D101	101 MULTI USE AREA	3'-0" x 7'-0" x 1 3/4"	HM	PT	A	WLD	PT	7	n/a	Insulated door & frame
D102A	102 VEST (ext)	3'-6" x 7'-0" x 1 3/4"	HM	PT	E	WLD	PT	8	n/a	Sidelight, auto-opener, insulated
D102B	102 VEST (int)	3'-6" x 7'-0" x 1 3/4"	HM	PT	E	WLD	PT	8	n/a	Sidelight, auto-opener
D103	103 LOBBY	3'-0" x 7'-0" x 1 3/4"	HM	PT	A	WLD	PT	6	1.5 hr	
D104	104 FAMILY WC	3'-0" x 7'-0" x 1 3/4"	HM	PT	A	KN-DN	PT	10	n/a	
D105A	105 KITCHEN	3'-0" x 7'-0" x 1 3/4"	HM	PT	A	KN-DN	PT	2	n/a	
D105B	105 KIT. SHUTTER	approx 8' W x 4' H	n/a	prefin	n/a	n/a	prefin	n/a	n/a	roll-down shutter
D108A	108 N. STAIR	3'-0" x 7'-0" x 1 3/4"	HM	PT	B	WLD	PT	5	3/4 hr	
D108B	108 N. STAIR (mech)	3'-0" x 7'-0" x 1 3/4"	HM	PT	A	WLD	PT	5	3/4 hr	
D109A	105 S. STAIR (ext)	3'-0" x 7'-0" x 1 3/4"	HM	PT	A	WLD	PT	7	n/a	Insulated door & frame
D109B	105 S. STAIR (int)	3'-0" x 7'-0" x 1 3/4"	HM	PT	A	WLD	PT	6	3/4 hr	
D110A	110 VEST (ext)	3'-6" x 7'-0" x 1 3/4"	HM	PT	E	WLD	PT	9	n/a	Sidelight, auto-opener, insulated
D110B	110 VEST (int)	3'-6" x 7'-0" x 1 3/4"	HM	PT	D	WLD	PT	9	n/a	auto-opener
D111	111 SOUND	3'-0" x 7'-0" x 1 3/4"	HM	PT	A	KN-DN	PT	2	n/a	
D114	114 JANITOR	3'-0" x 7'-0" x 1 3/4"	HM	PT	A	WLD	PT	5	n/a	
D115	115 BAPTISM	approx 20' run x 8'H	n/a	prefin	n/a	n/a	prefin	n/a	n/a	Accordian door with lock
D116	116 CHANGE	3'-0" x 7'-0" x 1 3/4"	HM	PT	A	KN-DN	PT	10		
SECOND FLOOR										
D201	201 SUITE A	3'-0" x 7'-0" x 1 3/4"	SC	PT	A	KN-DN	PT	1	20 min.	
D202	202 SUITE D	3'-0" x 7'-0" x 1 3/4"	SC	PT	A	KN-DN	PT	1	20 min.	
D203	203 SUITE A (rev)	3'-0" x 7'-0" x 1 3/4"	SC	PT	A	KN-DN	PT	1	20 min.	
D204	204 SUITE B	3'-0" x 7'-0" x 1 3/4"	SC	PT	A	KN-DN	PT	1	20 min.	
D205	205 SUITE A	3'-0" x 7'-0" x 1 3/4"	SC	PT	A	KN-DN	PT	1	20 min.	
D206	206 SUITE B(rev)	3'-0" x 7'-0" x 1 3/4"	SC	PT	A	KN-DN	PT	1	20 min.	
D207	207 SUITE C	3'-0" x 7'-0" x 1 3/4"	SC	PT	A	KN-DN	PT	1	20 min.	

FINISH HARDWARE

1. PART 1 - GENERAL
1.1 Related Work .1 Section 16000 Electrical
.2 Section 06100 Carpentry

1.2 References .1 Standard hardware location dimensions to Canadian Metric Guide for Steel Doors and Frames, prepared by the Canadian Steel Door & Frame Manufacturer's Association, unless indicated.
.2 Utilize ULC listed/labeled hardware for fire-rated doors.

1.3 Hardware List .1 Submit a hardware schedule which meets the functions of the included hardware group requirements.
.2 Indicate hardware proposed, including make, model, material, function, finish and other pertinent information.

1.4 Maintenance Data .1 Provide product data for inclusion to manuals.
.2 Brief maintenance staff regarding proper care, cleaning & maintenance.

1.5 Delivery & Storage .1 Store finish hardware in locked, clean, dry area.
.2 Package each item including fastening, label each package to identify items and location.

2. PART 2 - PRODUCTS
2.1 Hardware Items .1 Use one manufacturer's products for alike items.
.2 All hardware to be commercial grade including suite entrance doors, but not interior suite doors which are residential standard.
.3 All finishes to be nickel or as close to matching as possible.

2.2 Fastenings .1 Supply screws, bolts, expansion shields and other fastening devices for satisfactory installation and operation of hardware.
.2 Exposed fastening devices to match the finish of hardware.
.3 Use fasteners compatible with material through which they pass.

2.3 Hardware Groups .1 This specification utilizes a 'performance' based description of the required functioning of each door.
.2 Read in conjunction with drawings and door schedule.
.3 Manitoba Building Code (including amendments) & National Building Codes, as well as any governing CSA / ULC standards, etc that may govern the specification and application of door hardware, take precedence over the following hardware's functional description.
.4 Advise Architect of any necessary and/or proposed changes, including reasons for the change, prior to close of tender and as per division 1: time instructions for issuing addenda.
.5 Failure to do so will not relieve supplier from providing the required hardware package of required products.

2.4 Exterior Door Sills Doors. Sills to be: .1 Supply and install insulated metal door thresholds for all exterior
a) beveled to a maximum height of ½"/ 12.5mm
b) thermally broken, and
c) extend over top exterior 1.75"/44mm rigid insulation, sheathing, etc. onto the exterior floor by +/- ½"/12.5mm.

2.5 Keying .1 Provide two (2) keys for every lock and master key in contract.
.2 Submaster keying required for:
- Main floor Multi Use Area and associated doors including main floor suite front door D100.
- Upper floor residential associated doors, including residential doors located on main floor.
.3 Sub-submaster keying required for suite doors to laundry doors.
- Key each of 7 suites per floor to the Laundry Room on that floor (D210, D310, D410 & D510).
- Key main floor suite (D100) to 2nd level Laundry Room (D210).

2.6 FOB System .1 Provide the Owner with:
- software and training for the Owner to program / assign & cancel FOB discs to residents.
- minimum 120 blank FOB discs for future use.

3. PART 3 - EXECUTION
3.1 Installation .1 Furnish door and frame manufacturers with complete instructions and templates for preparation of their work, to receive hardware. Include instructions for proper installation of each component.
.2 Install hardware to standard hardware location dimensions and in accordance with the current Manitoba Building Code.

3.2 Intent of the Hardware Codes .1 The following codes are intended to offer a description of the door functional intent and not necessarily all the hardware required to achieve the function described.
.2 The bidder must augment the following descriptions to include any/all hardware required to achieve same AND meet the Manitoba Building Code and/or other regulatory bodies in effect.
.3 Report any/all conflicts to the Architect during the bidding period.
.4 Failure to meet any of the above will not relieve the bidder of his onus to provide all the equipment required to do so, for code compliance and fully operational door/frame to industry standards.
.5 All information to be read in conjunction with door schedule and plans for construction, windows, fire ratings, electrical, etc.

3.3 Hardware Codes
Group 1 3'-0" x 7'-0" x 1 ¾" SC Typ. Suite Entrance 20 min. UL
D100, D201-D207, D301-D307, D401-407, D501-507
a) 3 hinges
b) levered passage set
c) door closer (120 degree)
d) deadbolt (keyed ext. / thumb-turn int.)
e) two peep viewers (heights as shown)
f) floor door stop (maximum 16" from hinged jamb)

Group 2 3'-0" x 7'-0" x 1 3/4" HM Typ. Laundry Room 0 hr UL
D210, D310, D410, D510
D105 Kitchen 0 hr UL
D111 Sound 0 hr U
a) 3 hinges
b) Levered lockset (always openable from interior)
c) wall stop

Group 3 3'-6" x 7'-0" x 1 ¾" HM Electrical Closet 0 ULD
211, D311, D411, D511
a) 3 hinges
b) Deadbolt lock - right leaf
c) pull plate with handle

Group 4 3'-0" x 7'-0" x 1 ¾" HM Exit Stair (levels 2-5) ¾ hr UL
D208, D209, D308, D309, D408, D409, D508, D509
a) 3 hinges
b) levered passage set
c) door closer (120 degree)
d) wall stop

Group 5 3'-0" x 7'-0" x 1 ¾" HM N. Exit Stair (main floor int.) ¾ hr UL
D108A, D108B
D114 Janitor 0 hr UL
a) 3 hinges
b) levered lockset: always locked from exterior / always open from interior stair side.
c) door closer (120 degree)
d) wall stop

Group 6 3'-0" x 7'-0" x 1 ¾" HM D109B S. Exit Stair (int.) ¾ hr UL
D103 Lobby 1.5 hr UL
a) 3 hinges
b) Panic bar exit device: always locked from stairs and Lobby side (openable with key) / always open from hall side.
c) Door closer (120 degree)
d) Wall stop at D109B / Floor stop at D103.

Group 7 3'-0" x 7'-0" x 1 ¾" HM D109A S. Exit Stair (ext) 0 hr UL
D101 East Hall Exit (ext) 0 hr UL
a) 3 hinges
b) thermally broken steel threshold
c) exit device with no exterior hardware: always locked
d) door closer (120 degree)
e) weatherstrip kit
f) drop-down sill weatherstrip
g) full height steel astragal

Group 8 3'-6" x 7'-0" x 1 ¾" HM D102A N. Vest. (ext) 0 hr UL
D102B N. Vest. (int) 0 hr UL
a) 3 hinges
b) Interior: exit device (with vertical pin rods at head & sill) with keyed control for exterior unlocked or open position.
Exterior: keyed deadlock.
c) integrated door pull and s/s plate.
d) electro-magnetic strike with keyed release
e) exterior FOB scanner, wired to unlock door strike.
f) automatic door opener with 2 push paddles (1 exterior & 1 interior) at +/-4" diameter. Paddle face to have blue wheelchair symbol. (Wire paddles to not operate when door is locked)
D102A - Exterior N. Vestibule door ADD:
g) full height steel astragal.
h) thermally broken, wheelchair threshold.
i) brushed alum. pedestrian guard rail.
j) suite entry panel with min. 60 suite codes (2 phones / suite); see plan for exterior location; wire to D102A & D102B.

Group 9 3'-6" x 7'-0" x 1 ¾" HM D110A Hall (exterior Vest) 0 hr UL
D110B Hall (interior Vest) 0 hr UL
a) 3 hinges
b) Interior: exit device (with vertical pin rods at head & sill) with keyed control for exterior unlocked or open position.
Exterior: keyed deadlock.
c) integrated door pull and s/s plate.
d) electro-magnetic strike with keyed release
e) automatic door opener with 2 push paddles (1 exterior & 1 interior) at +/-4" diameter. Paddle face to have blue wheelchair symbol. (Wire paddles to not operate when door is locked)
D110A - Exterior Vestibule door ADD:
g) full height steel astragal
h) thermally broken, wheelchair threshold

Group 10 3'-0" x 7'-0" x 1 ¾" HM D104 Family WC 0 hr UL
3'-0" x 7'-0" x 1 ¾" HM D116 Change 0 hr UL
a) 3 hinges
b) Levered privacy lockset (emergency 'openable' from exterior)
c) Wall stop

Group 11 3'-0" x 7'-0" x 1 ¾" HM DB01 Basement N. Stair ¾ hr UL
3'-0" x 3'-0" x 1 ¾" HM DB02 Crawl Space Access ¾ hr UL
a) 3 hinges
b) Levered passage set
c) Door closer
d) Wall stop (DB01 only)

INTERIOR SUITE HARDWARE:
Group R1 S1 Suite Washrooms HC 3'-0" x 6'-8" x 1 1/8" 0 hr UL
a) 3 hinges
b) lever privacy set
c) wall stop

Group R2
S1 Accessible Storage HC 3'-0" x 6'-8" x 1 1/8" 0 hr UL
S1 Accessible Bedroom HC 3'-0" x 6'-8" x 1 1/8" 0 hr UL
S2 Suite Storage HC 2'-8" x 6'-8" x 1 1/8" 0 hr UL
S3 Suite Bedroom HC 2'-6" x 6'-8" x 1 1/8" 0 hr UL
a) 3 hinges
b) lever passage set
c) wall stop at bedrooms

Group R3 S4 Accessible Garden Doors (36" width / 8 suites)
a) 3 hinges (supplied with door)
b) Wheelchair threshold (supplied with door)
c) Lever privacy set
d) Add deadbolt on 2 second floor suites only (keyed exterior / thumb-turn interior)
e) Check chain.
PROPOSED KEYING SCHEDULE:
Note: The following keying schedule is not the final 'Owner Approved' intent and is subject to change.

Grand Master AB 1. Keyed to all doors

Sub-Grand Master A: 1. Suites: D100, D201-D207, D301-D307, D401-D407, D501-D507
2. Laundry: D210, D310, D410, D510
3. Electrical: D211, D311, D411, D511
4. Common Building Service:
a) North Exit from Vest: D108A
b) Mechanical Room: D108B
b) Front Entrance: D102A, D102B
c) Lobby to Hall: D103

Sub-Grand Master B:
1. South Exit Stair: D109B
2. Lobby to Hall: D103
3. Hall Entrance: D110A, D110B
4. Janitor: D114

Sub-sub Masters:
1. Suites: D100, D201-D207 to North Exit 108A, Entry 102A/102B & Laundry: D210
2. Suites: D301-D307 to North Exit 108A, Entry 102A/102B & Laundry: D310
3. Suites: D401-D407 to North Exit 108A, Entry 102A/102B & Laundry: D410
4. Suites: D501-D507 to North Exit 108A, Entry 102A/102B & Laundry: D510

Notes: 1. Non-keyed Doors:
- Multi Use Area to Exterior Exit Door: D101
- South Stair Exterior Exit Door: D109A
- Family WC: D104
- Kitchen: D105A
- Sound: D111
- Change: D116
- Basement North Exit: DB01
- Crawl Space Access: DB02

2. Other Doors:
- Kitchen D105B - Roll-down Shutter
- Baptism D115 - Woodmaster accordion door

Consultants
ARCHITECTURAL TECHNOLOGIST
tsquaretechniques@gmail.com
204.771.2436

Project Management
BOUCHARD BROS 2014 LTD

Seal
PROVINCE OF MANITOBA GERALD A. KORZENIOWSKI REGISTERED ARCHITECT
9 Oct. 2025
GERALD A. KORZENIOWSKI ARCHITECT INC. No. 0293 REGISTERED ARCHITECTURAL CORPORATION
9 Oct. 2025

Description	Date (m/d/y)	Drawn	Checked

Revisions/Issuance (Period (s))
Ins.

Architect
GERALD A. KORZENIOWSKI ARCHITECT INC.
20 VALCOURT WAY
BRANDON, MB R7C 0B3
PHONE: (204) 832-8666

Project Title
520 WILLIAM AVE.
MULTI - FAMILY
WINNIPEG MB

ISSUED FOR CONSTRUCTION

Drawn By

Sheet Title
SCHEDULES

Date 09/10/2025 Scale 1/4" = 1' - 0"
Version 9.29 Sheet Number **A.16**