Agenda – Appeal Committee – April 20, 2026

PUBLIC HEARINGS

Item No. 2 Appeal – Variance – 595 Gertrude Avenue
(Fort Rouge-East Fort Garry Ward)
File DAV 262235A/2025B

An appeal was received against the decision of the Director of Planning, Property and Development to reject a Variance on "the land" for the maintenance of a fence to permit the following:

1. a fence height of 11.13 feet (3.39 metres) in the west side yard instead of 7.5 feet (2.29 metres) as approved under DAV 23-197523/B;

2. a fence height of 8.09 feet (2.46 metres) in rear yard instead of 7.5 feet (2.29 metres) as approved under DAV 23-197523/B.

Agenda – Appeal Committee – April 20, 2026

File:	DAV 262234A/2025B
Appellant(s):	Jason Smith and Lynne Skromeda
Applicant:	Jason Smith
Premises Affected:	595 Gertrude Avenue
Legal Description:	LOT 4 BLOCK 21 PLAN 208 31/5 ST B, hereinafter called "the land"
Property Zoned:	"R2" (Residential Two-Family)
Nature of the Application:	To vary the "R2" Development and Design Standards of the Winnipeg Zoning By-Law No. 200/2006 for the maintenance of a fence to permit the following: 1. a fence height of 11.13 feet (3.39 metres) in the west side yard instead of 7.5 feet (2.29 metres) as approved under DAV 23-197523/B; 2. a fence height of 8.09 feet (2.46 metres) in rear yard instead of 7.5 feet (2.29 metres) as approved under DAV 23-197523/B.
Exhibits Filed:	1. Order DAV 262234/2025B dated March 9, 2026 2. Notice of Appeal filed by Jason Smith and Lynne Skromeda, received March 20, 2026 3. Notification of Public Hearing dated April 3, 2026 4. Manitoba Status of Title 2561051/1 5. Confirmation from the Zoning and Permits Administrator that the subject property may be posted in substitution for newspaper advertising 6. Letter of Authorization dated November 1, 2024 from Lynne Skromeda and Jason Smith to Lynne Skromeda and Jason Smith 7. Petition in support of the appeal purporting to contain 4 signatures, submitted by the Appellant 8. Plans, Sheets 1 to 7 inclusive, for File DAV 262234/2025B dated February 19, 2026 9. Report from the Urban Planning Division dated February 27, 2026 10. Inspection Report

The Winnipeg Public Service to advise that all statutory requirements with respect to this appeal have been complied with.

Moved by Councillor

That the report of the Winnipeg Public Service be taken as read.

Moved by Councillor

That the receipt of public representations be concluded.

Moved by Councillor

That in accordance with Subsection 247(3) of The City of Winnipeg Charter, the Variance,

(a) ☐ is consistent ☐ is not consistent
with Plan Winnipeg, and any applicable secondary plan;

(b) ☐ does not create ☐ does create
a substantial adverse effect on the amenities, use, safety and convenience of the adjoining property and adjacent area, including an area separated from the property by a street or waterway;

(c) ☐ is ☐ is not
the minimum modification of a zoning by-law required to relieve the injurious effect of the zoning by-law on the applicant's property; and

(d) ☐ is ☐ is not
compatible with the area in which the property to be affected is situated.

Supporting Reasons:

Moved by Councillor

That the appeal(s) be allowed / denied and the decision of the XXX Community Committee / Director of Planning, Property and Development be / not be concurred in.

Moved by Councillor

That Variance Order DAV 262234A/2025B be confirmed / cancelled.

Moved by Councillor

That the public hearing with respect to this appeal be concluded.

Exhibit “9” referred to in File DAV 262234A/2025B

PLANNING ADMINISTRATIVE REPORT

Title: DAV 25-262234\B – 595 Gertrude Ave

Issue: For consideration of a Variance associated with increased fence height.

Critical Path: Director of Planning, Property, and Development

AUTHORIZATION

Author	Department Head	CFO	CAO
Donna Kane	n/a	n/a	

DECISION AND CONDITIONS

The Urban Planning and Design Division **rejects** the application to vary the "R2" Development and Design Standards of Winnipeg Zoning By-Law No. 200/2006 for the maintenance of a fence to permit the following:

~~1) a fence height of 11.13 feet (3.39 metres) in the west side yard instead of 7.5 feet (2.29 metres) as approved under DAV 23-197523/B;~~

~~2) a fence height of 8.09 feet (2.46 metres) in rear yard instead of 7.5 feet (2.29 metres) as approved under DAV 23-197523/B.~~

REASON FOR THE REPORT

- The applicant is proposing to maintain fencing and requires a Variance for fence height requirements of the *Winnipeg Zoning By-Law*.
- This report provides information regarding the subject application’s compliance with *The City of Winnipeg Charter*, section 249.

FILE/APPLICANT DETAILS

FILE:	**DAV 25-262234\B**
RELATED FILES:	DAV 23-197523/B
COMMUNITY:	City Centre Committee
NEIGHBOURHOOD #:	1.110 - (McMILLAN)
SUBJECT:	To vary the "R2" Development and Design Standards of Winnipeg Zoning By-Law No. 200/2006 for the maintenance of a fence to permit the following: 1) a fence height of 11.13 feet (3.39 metres) in the west side yard instead of 7.5 feet (2.29 metres) as approved under DAV 23-197523/B; 2) a fence height of 8.09 feet (2.46 metres) in rear yard instead of 7.5 feet (2.29 metres) as approved under DAV 23-197523/B.
LOCATION:	595 Gertrude Ave
LEGAL DESCRIPTION:	LOT 4 BLOCK 21 PLAN 208 31/5 ST B
APPLICANT:	Jason Smith 595 Gertrude Ave Winnipeg, MB R3L 0M9
OWNER:	Jason Smith 595 Gertrude Ave Winnipeg, MB R3L 0M9

HISTORY

- In July 2023, a complaint was received regarding fence height.

- In August 2023, a Variance application was received for an increased height of 7.5 feet instead of 6.5 feet and was approved.

- Ongoing and subsequent inspections reveal that the fencing in question is taller than 7.5 feet.

- In November 2026, a new Variance application was received to further increase the fence height.

DISCUSSION

CRITERIA FOR APPROVAL

Pursuant to Section 247(3) of *The City of Winnipeg Charter*, an application for a Variance with respect to a property may be approved if the Variance:

(a) is not consistent with *Plan Winnipeg* and any applicable secondary plan;

(b) does create a substantial adverse effect on the amenities, use, safety and convenience of the adjoining property and adjacent area, including an area separated from the property by a street or waterway;

(c) is not the minimum modification of a zoning-by-law required to relieve the injurious effect of the zoning by-law on the applicant's property; and

(d) is not compatible with the area in which the property to be affected is situated.

SITE DESCRIPTION

- The subject property is located on the north side Gertrude Ave, east of Daly Street North in the Mcmillan neighbourhood of the Fort Rouge - East Fort Garry ward.
- The subject site is 5,995 square feet (556.9 square metres) in area. The site is currently occupied by a two and a half (2 ½) storey 1,925 square foot single-family dwelling built in 1909 and used as a private residence.
- The subject site is accessed by a paved back lane.



Figure 1: Aerial photo of subject site and surrounding area *(flown 2024)*

SURROUNDING LAND USE AND ZONING (See Figure 2)

North: Care Home uses zoned “R2” Residential Two-Family

South: Single-family residential uses zoned “R2” Residential Two-Family

East: Single-family residential uses zoned “R2” Residential Two-Family

West: Single-family residential uses zoned “R2” Residential Two-Family

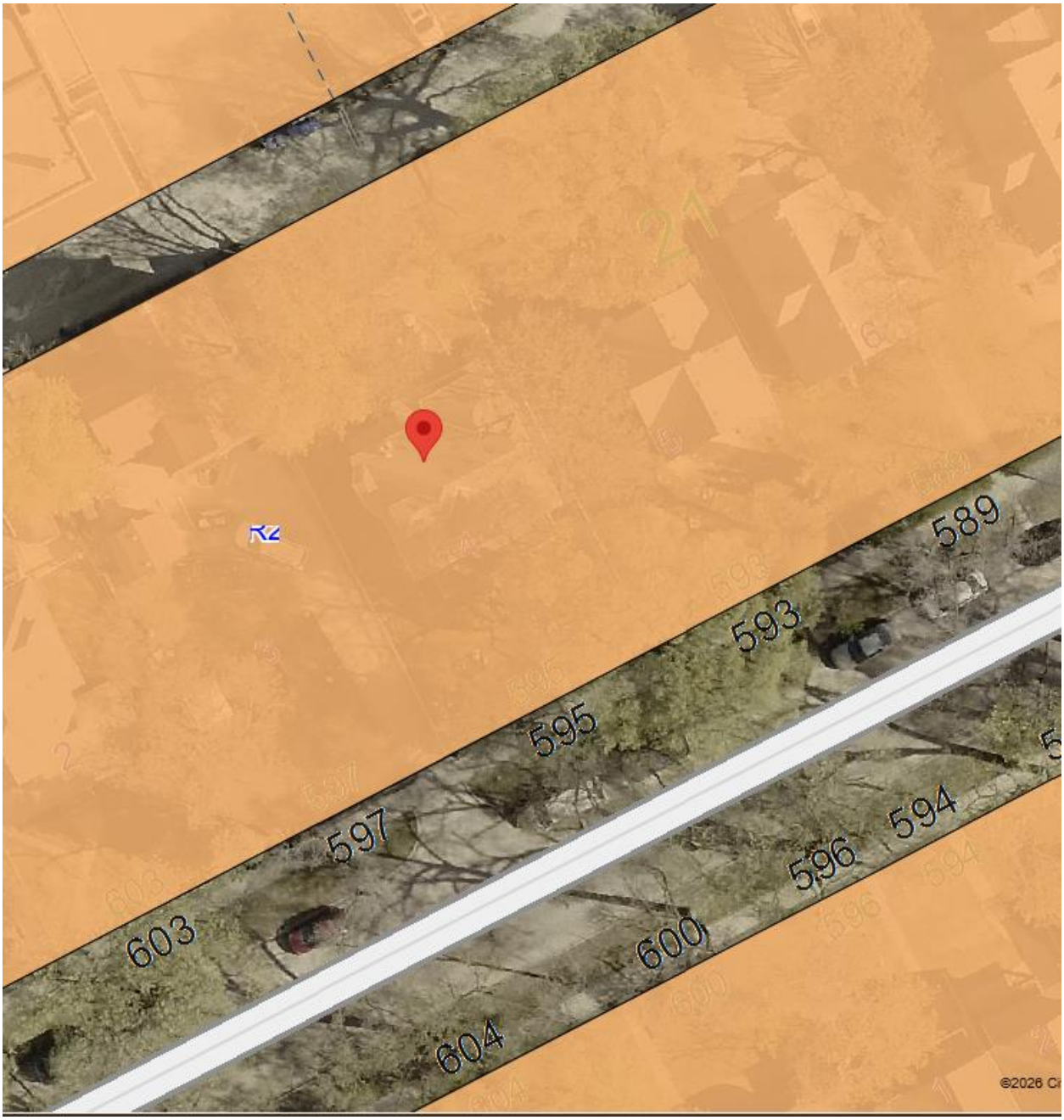

Figure 2: Zoning of the site and surrounding area.

DESCRIPTION OF THE PROPOSED DEVELOPMENT

- The applicant intends to maintain the existing fencing.

Reason for the Variance

In the “R2” district, fence height requirements are 4 feet in the front yard and 6.5 feet in the side and rear yards.

The applicant intends to maintain the existing fence height of 11.3 feet along a portion of the west side yard and a fence height of 8.09 feet along the rear yard. For these reasons, a Variance is required.

ANALYSIS AND ISSUES

The increased height of the existing fencing is not compatible with the dwelling or existing fencing on the block and poses a substantial adverse impact upon adjoining properties and the adjacent area.

The existing fence heights far exceed the by-law regulations and what would be supported by Urban Planning. In 2023, the applicant worked with Urban Planning to arrive at a compromised height of 7.5 feet and the applicant advised that they would reduce the fence height accordingly. Further inspections at the site reveal that the applicant did not complete the necessary reduction to the fence height to meet the supported and approved height of 7.5 feet.

If the applicant feels that they require more privacy than they previously were granted via the Variance order from 2023, they can construct some type of lattice like structure that can then be covered in some type of vegetation, in the buildable area of their property. This option would not require a Variance for height so long as it did not exceed 13 feet.



Figure 3: Fencing along the rear property line.

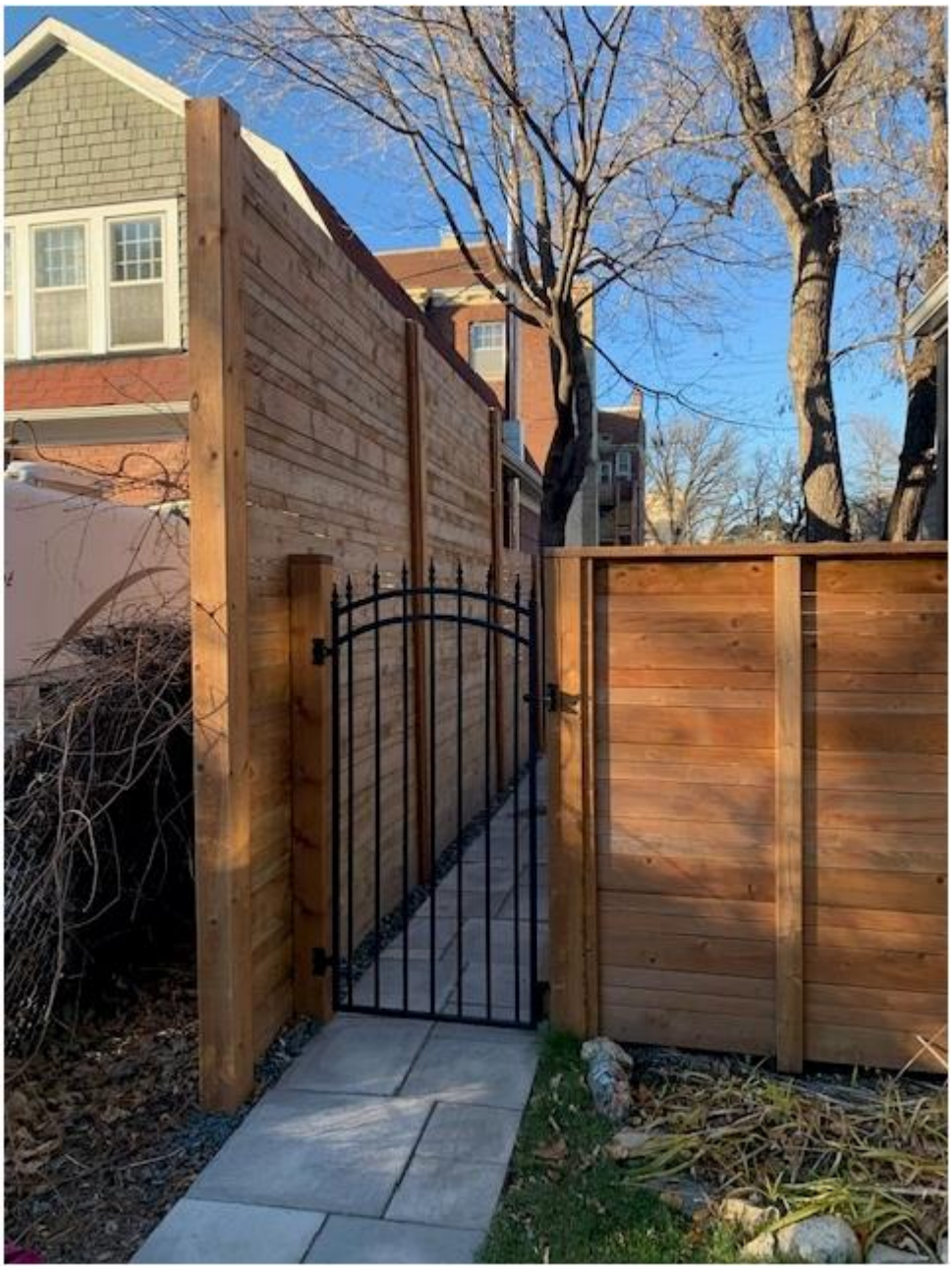

Figure 4: Fencing along the west property line.

REASONS FOR DECISION

In the context of Section 247(3), the Urban Planning and Design Division **rejects** the application for the following reasons:

(a) is not consistent with *Plan Winnipeg* and any applicable secondary plan;

In that, the existing fencing not compatible with neighbourhood character and is not complementary to existing development.

(b) does create a substantial adverse effect on the amenities, use, safety and convenience of the adjoining property and adjacent area, including an area separated from the property by a street or waterway;

In that, the proposed heights are not compliant and would pose an adverse effect on the adjacent area.

(c) is the minimum modification of a zoning-by-law required to relieve the injurious effect of the zoning by-law on the applicant's property; and

In that, the Variances cannot be considered minor modifications of the Zoning By-law due to the proximity of neighbouring properties.

(d) is compatible with the area in which the property to be affected is situated.

In that, similar scale fencing has been rejected throughout the City.

CONSULTATION

In preparing this report there was internal consultation with: N/A

OURWINNIPEG 2045 POLICY ALIGNMENT

OurWinnipeg Goal: City Building
Objective 1: Responsibly plan, prioritize and accommodate growth in areas that best support *Complete Communities* principles, to achieve this Plan's sustainable development goals.

- Facilitate growth and change strategically within Winnipeg's unique Transformative Areas and Established Neighbourhoods, to enhance the ability of the urban environment to contribute towards this Plan's goals.

WINNIPEG CLIMATE ACTION PLAN ALIGNMENT

Consideration was given to whether this report connects to any of the specific Goals and Objectives in the Winnipeg Climate Action Plan and it was determined the PRS is not applicable to this specific report.

WINNIPEG POVERTY REDUCTION STRATEGY ALIGNMENT

Consideration was given to whether this report connects to any of the specific Goals and Objectives in the *PRS* and it was determined the *PRS* is not applicable to this specific report.

SUBMITTED BY

Department:	Planning, Property and Development
Division:	Urban Planning and Design
Prepared by:	Donna Kane
Date:	Friday, February 27, 2026
File No.	DAV 25-262234\B

Exhibit “8” referred to in File DAV 62234A/2025B



ZONING AND PERMIT BRANCH

THIS PLAN IS SUBMITTED FOR APPROVAL IN

CONNECTION WITH: DAV 25-262234/B

SHEET # 1 OF 7

DATE: February 19, 2026

studio b B. ROCKE LANDSCAPING
CONSULT · DESIGN · BUILD
22-530 WATERFRONT DRIVE, WINNIPEG, MANITOBA
939 0JT (204)615-2512

THIS DRAWING SHOULD NNOT BE SCALED, ONLY STATED DIMENSIONS ARE TO BE CONSIDERED.

CONTRACTOR SHOULD VERIFY ALL DETAILS/INFORMATION GIVEN ON THIS DRAWING. ANY DISCREPANCIES DISCOVERED SHALL BE BROUGHT TO THE ENGINEERS ATTENTION PRIOR TO COMMENCEMENT OF WORK. FAILURE TO COMPLY WITH THIS ABOVE CLAUSE WILL BE THE CONTRACTOR'S LIABILITY.

ALL DIMENSIONS ARE INDICATED IN FEET AND INCHES.

PROJECT	SHEET TITLE				NORTH	SHEET NO.
595 GERTRUDE AVE.	SITE PLAN					A-00
CLIENT NAME	DRAWN BY	SCALE	UNIT	DATE		
JASON & LYNNE	J.G. Muel	AS SHOWN	FT-INCHES	11 Aug. 2023		

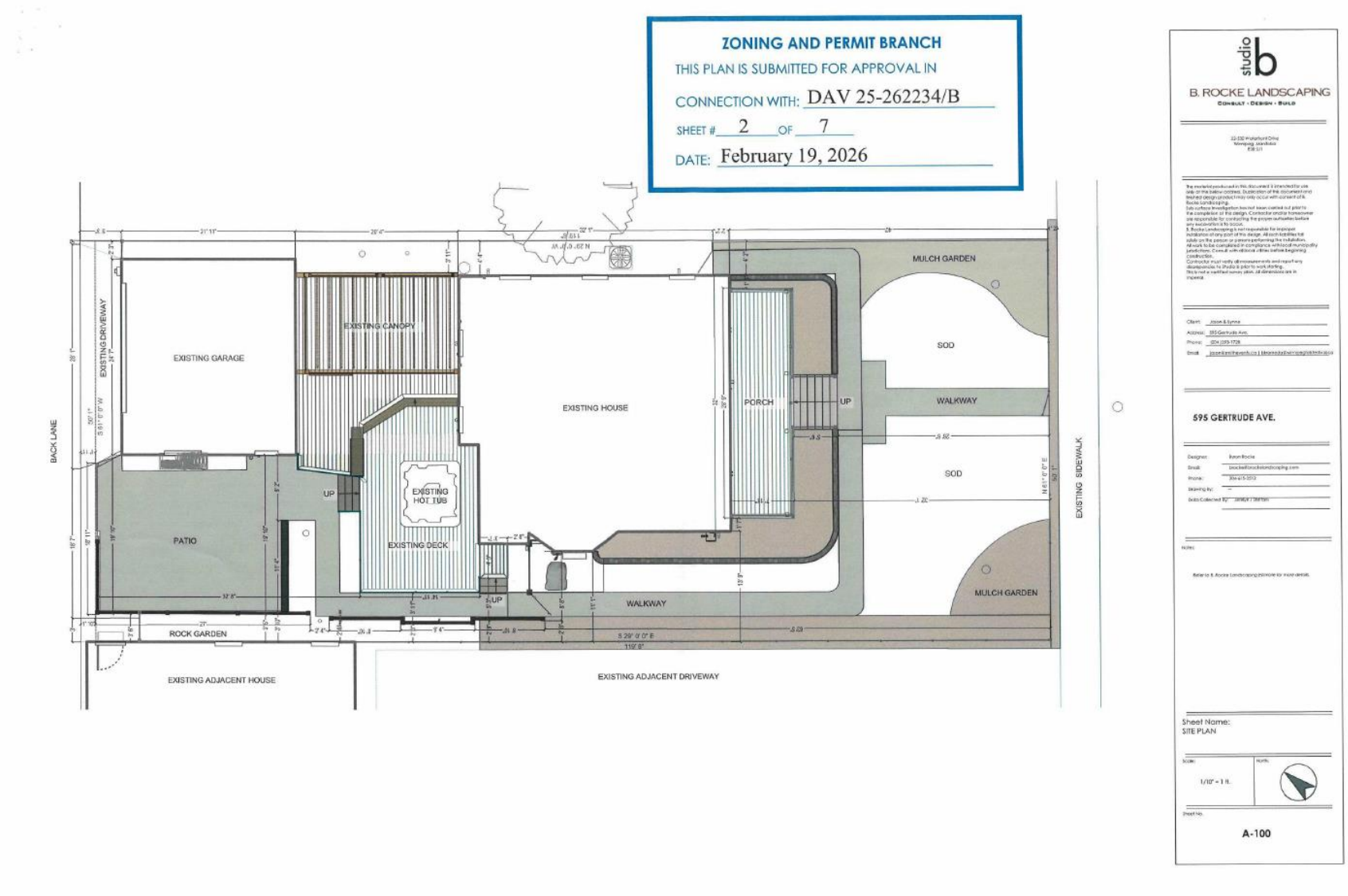
ZONING AND PERMIT BRANCH
THIS PLAN IS SUBMITTED FOR APPROVAL IN
CONNECTION WITH: DAV 25-262234/B
SHEET # 2 OF 7
DATE: February 19, 2026
BACK LANE
EXISTING DRIVEWAY
EXISTING GARAGE
EXISTING CANOPY
EXISTING HOUSE
PORCH
UP
MULCH GARDEN
SOD
WALKWAY
SOD
EXISTING SIDEWALK
UP
EXISTING HOT TUB
EXISTING DECK
PATIO
UP
WALKWAY
MULCH GARDEN
ROCK GARDEN
EXISTING ADJACENT HOUSE
EXISTING ADJACENT DRIVEWAY
studio b
B. ROCKE LANDSCAPING
CONSULT · DESIGN · BUILD
595 GERTRUDE AVE.
Sheet Name:
SITE PLAN
1/10" = 1 ft.
A-100

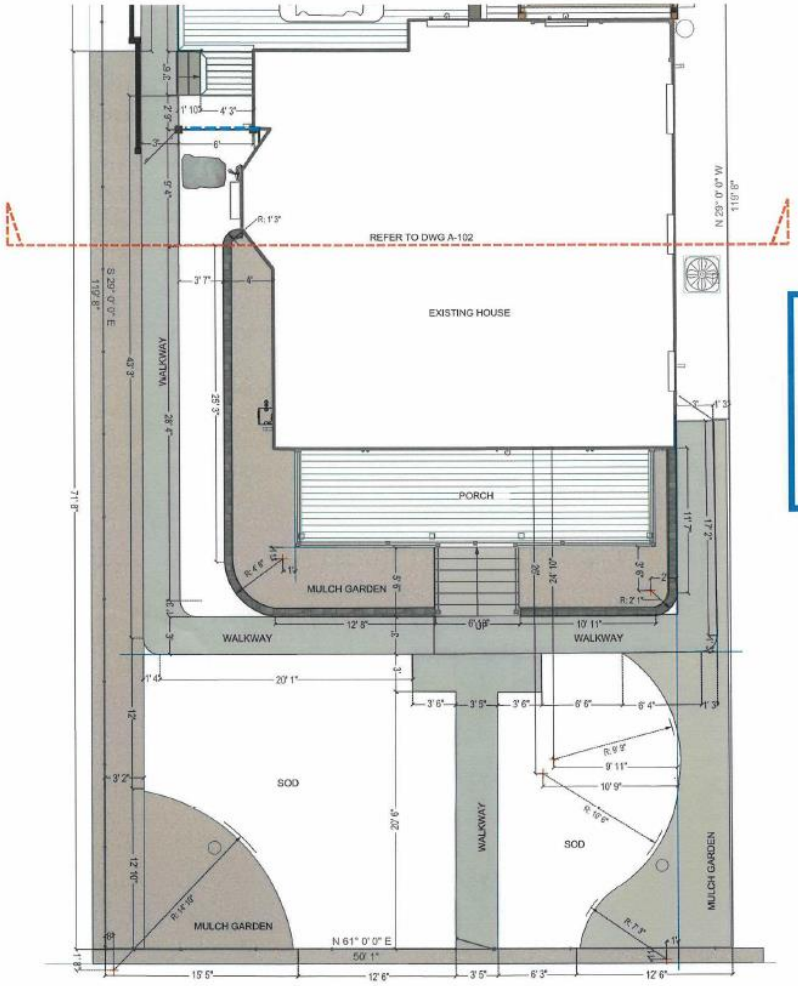

LEGEND

6' H fence w/ 42" ornamental wrought iron gate

ZONING AND PERMIT BRANCH

THIS PLAN IS SUBMITTED FOR APPROVAL IN

CONNECTION WITH: DAV 25-262234/B

SHEET # 3 OF 7

DATE: February 19, 2026

studio b

B. ROCKE LANDSCAPING

CONSULT · DESIGN · BUILD

595 GERTRUDE AVE.

Sheet Name:
LANDSCAPE LAYOUT
(FRONTYARD)

1/8" = 1 ft.

L-101

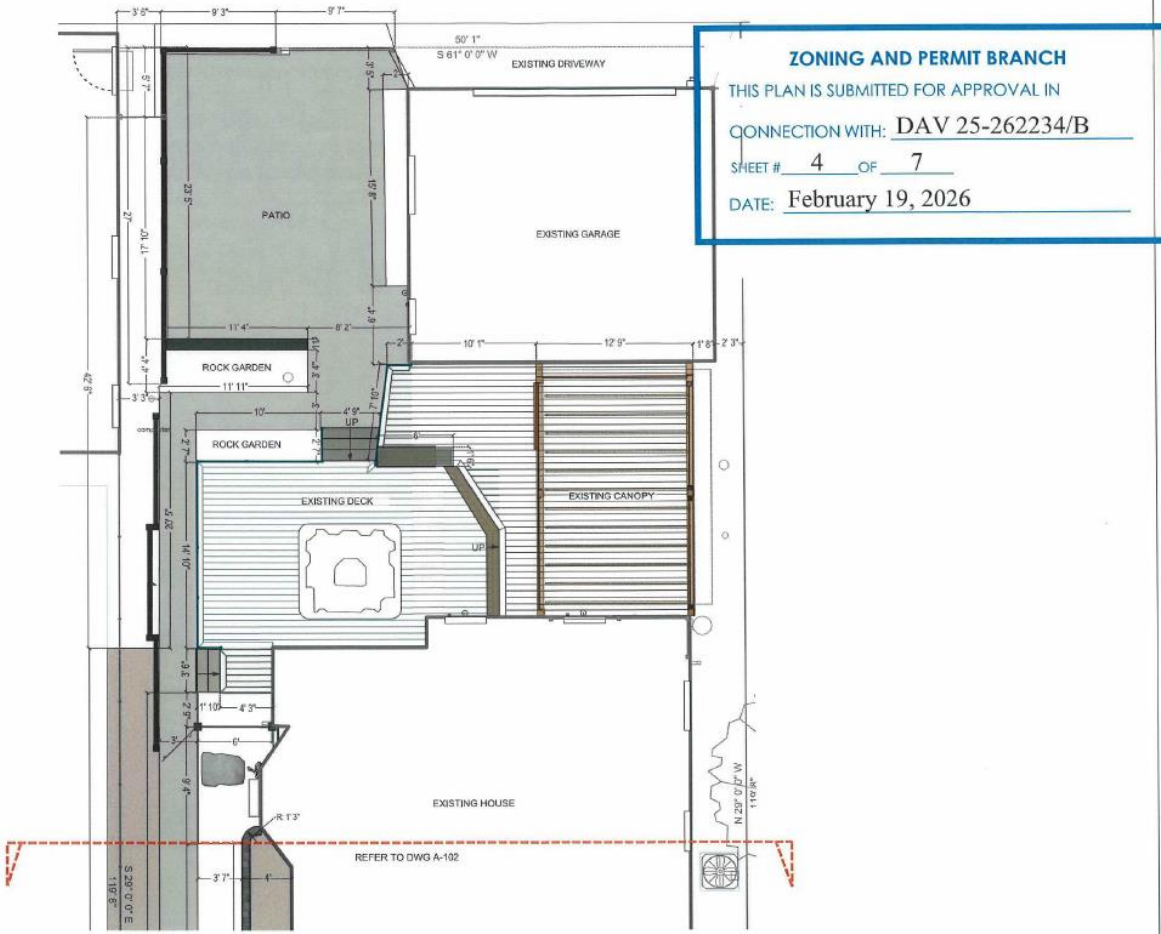

ZONING AND PERMIT BRANCH

THIS PLAN IS SUBMITTED FOR APPROVAL IN

CONNECTION WITH: DAV 25-262234/B

SHEET # 4 OF 7

DATE: February 19, 2026

studio b

B. ROCKE LANDSCAPING

CONSULT · DESIGN · BUILD

595 GERTRUDE AVE.

Sheet Name:
LANDSCAPE LAYOUT
(BACKYARD)

Scale: 1/8" = 1 ft.

A-102

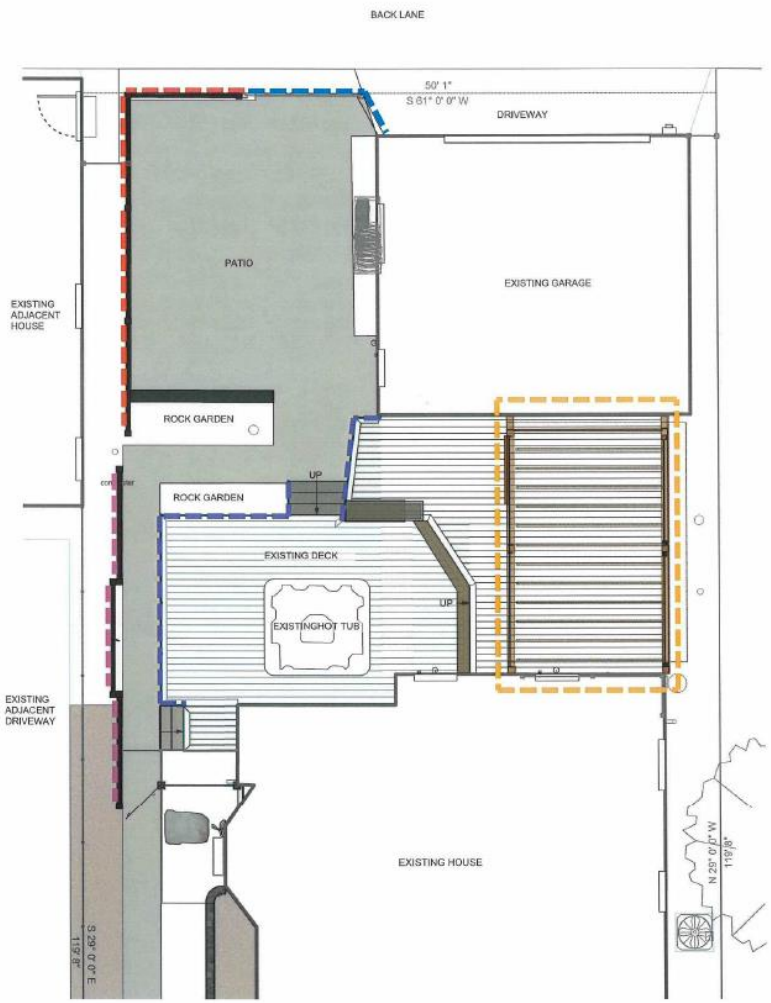

LEGEND

- Existing 8'1" High privacy screen wall
- Existing 11' 1.5" High privacy screen wall
- Existing 3'2" high glass railing
- Existing canopy (Refer to Canopy Plan dwgs by others)
- Existing 8'1"H fence w/ wood gate

ZONING AND PERMIT BRANCH

THIS PLAN IS SUBMITTED FOR APPROVAL IN

CONNECTION WITH: DAV 25-262234/B

SHEET # 5 OF 7

DATE: February 19, 2026

studio b

B. ROCKE LANDSCAPING

CONSULT · DESIGN · BUILD

595 GERTRUDE AVE.

Sheet Name:
PRIVACY SCREEN
LOCATION LAYOUT

A-103



PRIVACY SCREEN (11' 1.5"H)PLAN - West Side



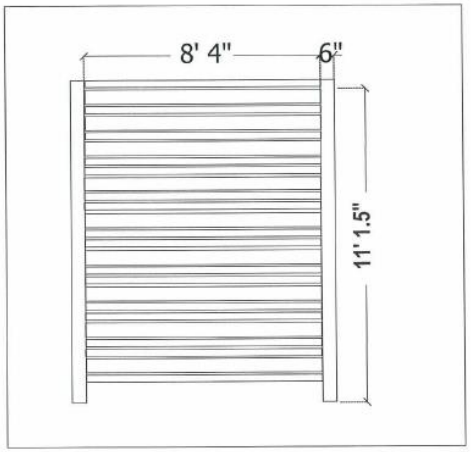

PRIVACY SCREEN (11' 1.5"H) Elevation

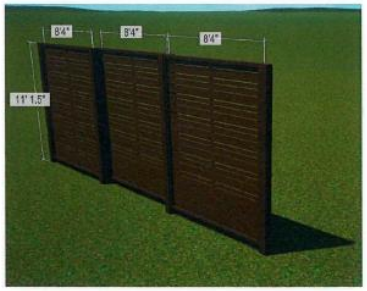

PRIVACY SCREEN (11' 1.5"H) Reference Image

ZONING AND PERMIT BRANCH

THIS PLAN IS SUBMITTED FOR APPROVAL IN

CONNECTION WITH: DAV 25-262234/B

SHEET # 6 OF 7

DATE: February 19, 2026

studio b

B. ROCKE LANDSCAPING

CONSULT • DESIGN • BUILD

595 GERTRUDE AVE.

Sheet Name:
CARPENTRY

Scale: 3/16" = 1 ft.

D-101

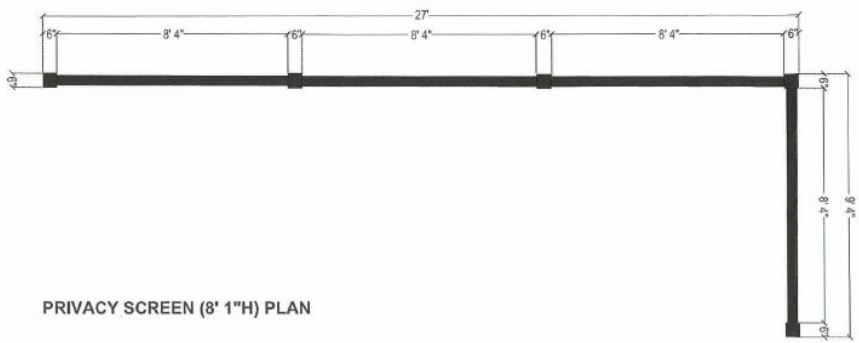

PRIVACY SCREEN (8' 1"H) PLAN

ZONING AND PERMIT BRANCH

THIS PLAN IS SUBMITTED FOR APPROVAL IN

CONNECTION WITH: DAV 25-262234/B

SHEET # 7 OF 7

DATE: February 19, 2026





PRIVACY SCREEN (8' 1"H) Reference Image

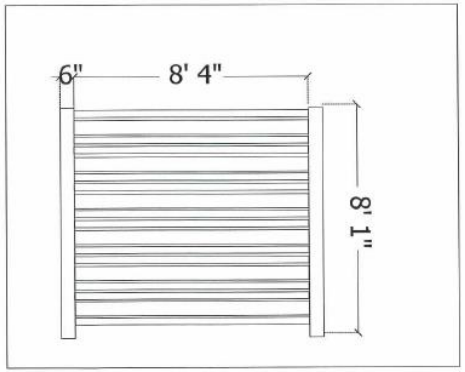

PRIVACY SCREEN (8'1"H) Elevation

studio b

B. ROCKE LANDSCAPING

Conceive • Design • Build

595 GERTRUDE AVE.

Sheet Name:
CARPENTRY

Scale: 9/32" = 1 ft.

D-102

Exhibit "2" referred to in File DAV 262234A/2025B

Subject: Appeal – Variance Order DAV 25-262234/B (595 Gertrude Avenue)

To the City Clerk – Appeals Committee,

We are writing to formally appeal Variance Order DAV 25-262234/B issued by the Planning, Property and Development Department regarding the property located at 595 Gertrude Avenue.

The variance application relates to maintaining an existing fence height of approximately 11.13 feet along a portion of the west side yard and 8.09 feet along a portion of the rear yard, where the by-law currently permits a maximum height of 7.5 feet under the previously approved variance.

We respectfully request that the Appeals Committee reconsider this decision on the following grounds:

Neighbour support and absence of adverse impact

The inspection that led to this matter appears to have been initiated by a complaint from a property located several houses away, however the immediately adjacent property owners on both sides of the property reviewed the application and provided support, noting that the additional fence height improves privacy for their properties as well.

In light of this direct support from the adjoining property owners, there is no clear evidence to conclude that the fence creates a substantial adverse effect on the amenities, use, safety, or convenience of those properties.

In addition, the variance applies only to a very limited portion of the overall fence - approximately 20% of the total perimeter - with the remainder of the fencing at a standard height of approximately 4 feet. The requested increase is intended to ensure safe and appropriate use of the property and does not negatively impact neighbouring sightlines, adjacent properties, or the character of the surrounding area.

Limited impact on the public realm

The fence is situated along one side of the rear yard only, and part of the rear property line, and is not visible from the street frontage of Gertrude Avenue. In addition, the rear portion of the fence is located across a back lane from a parking lot and a large waste and recycling enclosure, and is not directly adjacent to another residential property.

As a result, it does not impact the public streetscape, pedestrian movement, or sightlines, and its effects are confined to private yard areas.

Reasonableness and function of the variance

The fence serves a clear and reasonable privacy function in a dense residential context where neighbouring properties are built in close proximity, with a non-standard alignment of the neighbouring home that results in direct sightlines into our rear yard and their interior living spaces.

Notably, the house immediately to the west is set significantly farther back on its lot, with several windows facing directly into our rear yard from their living room, dining room, kitchen, and den.

These sightlines were previously screened by an older garage structure that had deteriorated and required removal. The increased fence height restores privacy for both properties in approximately the same area previously occupied by the garage and is lower in height than that original structure by several feet.

The variance seeks to maintain an existing condition that improves privacy between properties without creating impacts on public space. It also contributes to improved security at the rear of the property, where access from the lane has been an ongoing concern due to repeated break-ins and vandalism.

Internal inconsistency within the planning analysis

The administrative report notes that a lattice structure with vegetation could be constructed up to approximately 13 feet in height without requiring a variance, provided it is located within the buildable area of the property. This suggests that a structure of comparable or greater height may be permitted in an alternate form, while the existing structure - serving a similar function - is deemed incompatible.

This inconsistency makes it difficult to understand how the proposed fence height can reasonably be characterized as creating a substantial adverse effect or being incompatible with the surrounding area. It would also result in the unnecessary removal of an existing structure, only to replace it with a functionally similar alternative at significant cost and waste.

Previous variance context

It is also worth noting that a previous variance application was approved for a fence height of 7.5 feet in this location, reflecting the City's recognition of the unique conditions affecting this portion of the property. The current request represents a modest increase beyond that approval for a limited portion of the fence and avoids unnecessary costs associated with removing and rebuilding existing structures.

Additional context

We would also like to acknowledge that the current fence was constructed as part of a larger renovation project and that a permitting issue arose due to a miscommunication between contractors. Once we became aware that the fence did not comply with the applicable requirements, we paid the appropriate fines and followed the proper process by submitting a variance application so the matter could be reviewed appropriately.

This oversight was unintentional, and all other work - including a new garage, deck, and screened-in porch - was completed with the proper permits and in compliance with applicable requirements.

For the foregoing reasons, we respectfully request that the Appeals Committee allow the variance and permit the existing fencing to remain.

Thank you for your consideration.

Sincerely,
Jason Smith & Lynne Skromeda

Request for Support of a Zoning Variance

Signatures of support from adjoining impacted neighbours.

Date: AUGUST 7, 2023

To: The City of Winnipeg
Planning, Property and Development Department
Zoning and Permits
31 – 30 Fort Street
Winnipeg, Manitoba R3C 4X7

RE: 595 GERTRUDE AVE. (address or legal description of application)

I consulted with my neighbours on my request for relief on the following zoning restriction(s) at the above referenced premises.

Please provide a brief description of the proposed work to be varied in the space provided below.
The project is an increased fence height on the west and north sides of the backyard.

The following neighbours support/do not oppose my request for a Zoning Variance:

Name	Address	Daytime Phone Number	Signature(s)
MIKE JACKSON			M. Jackson
AMY JACK			Amy Jack
Barbara Huck			Barbara Huck
Peter Sivak	"	"	Peter Sivak

Your personal information is being collected consistent with the requirements and limitations set out under *The Freedom of Information and Protection of Privacy Act (FIPPA)*. This collection of personal information is authorized by section 36(1)(b) of The FIPPA for the administration of *Winnipeg Zoning Procedures By-law No. 200/2006*. Your information is protected by FIPPA's privacy provisions and will not be used or disclosed for any other purpose, except as authorized by law. Contact the City of Winnipeg's Corporate Access and Privacy Officer by mail (City Clerk's Department, Susan A. Thompson Building, 510 Main Street, Winnipeg MB, R3B 1B9) or by telephone (311) if you have questions about this collection of your personal information.

Exhibit “1” referred to in File DAV 262234/2025B

DAV 25-262234/B

APPLICANT: JASON SMITH
595 GERTRUDE AVE
WINNIPEG MB R3L 0M9

PREMISES AFFECTED: 595 Gertrude Avenue
LEGAL DESCRIPTION: LOT 4 BLOCK 21 PLAN 208 31/5 ST B
hereinafter called "the land".
PROPERTY ZONED: R2
ZONING ATLAS SHEET: AB24
NATURE OF APPLICATION:

To vary the "R2" Development and Design Standards of Winnipeg Zoning By-Law No. 200/2006 for the maintenance of a fence to permit the following:
1) a fence height of 11.13 feet (3.39 metres) in the west side yard instead of 7.5 feet (2.29 metres) as approved under DAV 23-197523/B;
2) a fence height of 8.09 feet (2.46 metres) in rear yard instead of 7.5 feet (2.29 metres) as approved under DAV 23-197523/B.

It is the opinion of the Director of Planning, Property and Development Department that this application does not meet the statutory criteria of the City of Winnipeg Charter in that it:

(a) is not consistent with Plan Winnipeg and any applicable secondary plan;
(b) does create a substantial adverse effect on the amenities, use, safety and convenience of the adjoining property and adjacent area, including an area separated from the property by a street or waterway;
(c) is not the minimum modification of a zoning by-law required to relieve the injurious effect of the zoning by-law on the applicant's property; and
(d) is not compatible with the area in which the property to be affected is situated.

C.W. Charter Subsection 247(3)

ORDER:

RE: 595 Gertrude Avenue

The Director of Planning, Property and Development Department hereby orders that the provisions of the "R2" dimensional standards of Zoning By-Law No. 200/2006 and amendments thereto for the maintenance of a fence to permit the following a fence height of 11.13 feet (3.39 metres) in the west side yard and a fence height of 8.09 feet (2.46 metres) in rear yard **is hereby REJECTED.**

DATE OF ORDER: March 09, 2026

CERTIFIED BY:



for Director Planning, Property and Development Department

HOW TO APPEAL

You can appeal this order by filing a letter of appeal with the City Clerk. Note that, in filing the appeal, the entirety of the order is subject to review by the designated committee at the appeal hearing. The appeal letter must:

(a) be addressed as set out below,

(b) be received at that office not later than 4:30 p.m. on March 23, 2026
[IF RECEIVED LATE YOUR APPEAL CANNOT BE HEARD.]

(c) refer to Variance Order No. DAV 25-262234/B, give brief reasons and describe whether you appeal the whole order or only part(s) of it.

You can attend the appeal hearing and speak on issues raised in someone else's appeal; but the designated committee can only rule on issues raised in appeals filed. If you are not sure what others have appealed you should file your own appeal.

Address: City Clerk, City of Winnipeg
c/o Appeals Committee
Susan A. Thompson Bldg.
510 Main Street
Winnipeg, MB, R3B 1B9
Fax 947-3452
Email: clk-appeals@winnipeg.ca