**Minutes – Appeal Committee – April 20, 2026**

## PUBLIC HEARINGS

**Item No. 2 Appeal – Variance – 595 Gertrude Avenue**
**(Fort Rouge-East Fort Garry Ward)**
**File DAV 262234A/2025B**

COMMITTEE DECISION:

The Appeal Committee allowed the appeal, did not concur in the decision of the Director of Planning, Property and Development, cancelled Variance Order DAV 262234/2025B and approved a Variance on "the land" for the maintenance of a fence to permit the following:

1. A fence height of 11.13 feet (3.39 metres) in the west side yard

2. A fence height of 8.09 feet (2.46 metres) in rear yard

Subject to the following condition:

1. That the fence shall be maintained in substantial conformance with the plans submitted and identified as Sheets 1 to 5 of DAV 26-262234/B.

DECISION MAKING HISTORY:

The Winnipeg Public Service advised that all statutory requirements with respect to this appeal have been complied with.

Moved by Councillor Mayes,
That the report of the Winnipeg Public Service be taken as read.

Carried

Moved by Councillor Mayes,
That the receipt of public representations be concluded.

Carried

Moved by Councillor Mayes,
That in accordance with Subsection 247(3) of The City of Winnipeg Charter, the Variance,

(a) [✓] is consistent [ ] is not consistent
with Plan Winnipeg, and any applicable secondary plan;

(b) [✓] does not create [ ] does create
a substantial adverse effect on the amenities, use, safety and convenience of the adjoining property and adjacent area, including an area separated from the property by a street or waterway;

(c) [✓] is [ ] is not
the minimum modification of a zoning by-law required to relieve the injurious effect of the zoning by-law on the applicant's property; and

(d) [✓] is [ ] is not
compatible with the area in which the property to be affected is situated.

Supporting Reasons:

1. The neighbours are supportive. There's a lot of good rationale for why. It isn't 11 feet around the entire permitter; it's 11 feet at a point for a reason. To take it down to put up a lattice-like structure that's 13 feet seems a bit pointless or punitive, frankly. So, the height makes sense, I think, in the community.

DECISION MAKING HISTORY (continued):

2. A lot of work obviously done with the neighbour, and the neighbour who is the one you are expecting to complain, has said they are supportive. So I just don't think this is that big a deal, so I'm prepared to grant the appeal.

Carried

Moved by Councillor Mayes,

That the appeal be allowed and the decision of the Director of Planning, Property and Development not be concurred in, and the Variance on "the land" for the maintenance of a fence be approved to permit as follows:

1. A fence height of 11.13 feet (3.39 metres) in the west side yard

2. A fence height of 8.09 feet (2.46 metres) in rear yard

Subject to the following condition:

1. That the fence shall be maintained in substantial conformance with the plans submitted and identified as Sheets 1 to 5 of DAV 26-262234/B.

Carried

Moved by Councillor Mayes,

That Variance Order DAV 262234/2025B be cancelled.

Carried

Moved by Councillor Mayes,

That the public hearing with respect to this appeal be concluded.

Carried

# THE CITY OF WINNIPEG
# VARIANCE APPEAL ORDER
## APPEAL COMMITTEE

***CORRECTED ORDER***

**DAV *262234*A/2025B**

| | |
|---|---|
| Before: | Appeal Committee<br>Councillor Eadie, Chairperson<br>Councillor Dobson<br>Councillor Mayes<br>Councillor Rollins |
| Hearing | April 20, 2026<br>Council Building, 510 Main Street |
| Applicant | Jason Smith |
| Premises Affected | 595 Gertrude Avenue |
| Legal Description | LOT 4 BLOCK 21 PLAN 208 31/5 ST B, hereinafter called "the land" |
| Property Zoned | "R2" (Residential Two-Family) |
| Nature of the Application | To vary the "R2" Development and Design Standards of the Winnipeg Zoning By-Law No. 200/2006 for the maintenance of a fence to permit the following:<br><br>1. a fence height of 11.13 feet (3.39 metres) in the west side yard instead of 7.5 feet (2.29 metres) as approved under DAV 23-197523/B;<br><br>2. a fence height of 8.09 feet (2.46 metres) in rear yard instead of 7.5 feet (2.29 metres) as approved under DAV 23-197523/B. |

ORDER MADE BY THE DIRECTOR OF PLANNING, PROPERTY AND DEVELOPMENT:

The Director of Planning, Property and Development rejected a Variance, File DAV ***262234***/2025B to Jason Smith, for the premises located at 595 Gertrude Avenue, for the maintenance of a fence to permit the following a fence height of 11.13 feet (3.39 metres) in the west side yard and a fence height of 8.09 feet (2.46 metres) in rear yard

Pursuant to the provisions of The City of Winnipeg Charter, Jason Smith and Lynne Skromeda, appealed the Variance Order DAV ***262234***/2025B, and after Notice, the appeal was heard on April 20, 2026.

Upon consideration of the evidence adduced and submissions made, the Appeal Committee is of the opinion that, subject to the conditions imposed, if any, this Appeal Order meets the statutory criteria as outlined in Subsection 247(3) of The City of Winnipeg Charter, in that it:

(a) [✓] is consistent [ ] is not consistent
with Plan Winnipeg, and any applicable secondary plan;

(b) [✓] does not create [ ] does create
a substantial adverse effect on the amenities, use, safety and convenience of the adjoining property and adjacent area, including an area separated from the property by a street or waterway;

(c) [✓] is [ ] is not
the minimum modification of a zoning by-law required to relieve the injurious effect of the zoning by-law on the applicant's property; and

(d) [✓] is [ ] is not
compatible with the area in which the property to be affected is situated.

Supporting Reasons:

1. The neighbours are supportive. There's a lot of good rationale for why. It isn't 11 feet around the entire permitter; it's 11 feet at a point for a reason. To take it down to put up a lattice-like structure that's 13 feet seems a bit pointless or punitive, frankly. So, the height makes sense, I think, in the community.

2. A lot of work obviously done with the neighbour, and the neighbour who is the one you are expecting to complain, has said they are supportive. So I just don't think this is that big a deal, so I'm prepared to grant the appeal.

ORDER:

The Appeal Committee orders that the appeal is allowed, Variance Order DAV ***262234***/2025B dated March 9, 2026, is cancelled, and the provisions of the "R2" Development and Design Standards of the Winnipeg Zoning By-law No. 200/2006 are varied on “the land” for the maintenance of a fence to permit the following:

1. A fence height of 11.13 feet (3.39 metres) in the west side yard

2. A fence height of 8.09 feet (2.46 metres) in rear yard

Subject to the following condition necessary to ensure conformity with the statutory criteria of The City of Winnipeg Charter:

1. That the fence shall be maintained in substantial conformance with the plans submitted and identified as Sheets 1 to 5 of DAV 26-262234/B.

THIS ORDER IS SUBJECT TO ALL BUILDING, HEALTH OR OTHER REGULATIONS PERTAINING TO THE LAND HEREIN REFERRED TO.

DATE OF ORDER: April 22, 2026

CERTIFIED BY:

Karly Dolski
Senior Committee Clerk

THE FOLLOWING PERSONS MADE REPRESENTATIONS:

In Support of the Appeal:

Jason Smith
Lynne Skromeda

In Opposition to the Appeal:

Nil

For Information on the Appeal:

Nil

For the City:

D. Kane, Planner, Planning, Property and Development Department
M. Robinson, Principal Planner, Planning, Property and Development Department

**EXHIBITS FILED FOR DAV 262234A/2025B**

1. Order DAV 262234/2025B dated March 9, 2026
2. Notice of Appeal filed by Jason Smith and Lynne Skromeda, received March 20, 2026
3. Notification of Public Hearing dated April 3, 2026
4. Manitoba Status of Title 2561051/1
5. Confirmation from the Zoning and Permits Administrator that the subject property may be posted in substitution for newspaper advertising
6. Letter of Authorization dated November 1, 2024 from Lynne Skromeda and Jason Smith to Lynne Skromeda and Jason Smith
7. Petition in support of the appeal purporting to contain 4 signatures, submitted by the Appellant
8. Plans, Sheets 1 to 7 inclusive, for File DAV 262234/2025B dated February 19, 2026
9. Report from the Urban Planning Division dated February 27, 2026
10. Inspection Report
11. Supporting documentation in support of the appeal, submitted by Jason Smith on April 17, 2026

Exhibit “9” referred to in File DAV 262234A/2025B

# PLANNING ADMINISTRATIVE REPORT

**Title:** DAV 25-262234\B – 595 Gertrude Ave

**Issue:** For consideration of a Variance associated with increased fence height.

**Critical Path:** Director of Planning, Property, and Development

## AUTHORIZATION

| Author | Department Head | CFO | CAO |
|---|---|---|---|
| Donna Kane | n/a | n/a | |

## DECISION AND CONDITIONS

The Urban Planning and Design Division **rejects** the application to vary the "R2" Development and Design Standards of Winnipeg Zoning By-Law No. 200/2006 for the maintenance of a fence to permit the following:

~~1) a fence height of 11.13 feet (3.39 metres) in the west side yard instead of 7.5 feet (2.29 metres) as approved under DAV 23-197523/B;~~

~~2) a fence height of 8.09 feet (2.46 metres) in rear yard instead of 7.5 feet (2.29 metres) as approved under DAV 23-197523/B.~~

## REASON FOR THE REPORT

- The applicant is proposing to maintain fencing and requires a Variance for fence height requirements of the *Winnipeg Zoning By-Law*.
- This report provides information regarding the subject application’s compliance with *The City of Winnipeg Charter*, section 249.

## FILE/APPLICANT DETAILS

| | |
|---|---|
| **FILE:** | **DAV 25-262234\B** |
| **RELATED FILES:** | DAV 23-197523/B |
| **COMMUNITY:** | City Centre Committee |
| **NEIGHBOURHOOD #:** | 1.110 - (McMILLAN) |
| **SUBJECT:** | To vary the "R2" Development and Design Standards of Winnipeg Zoning By-Law No. 200/2006 for the maintenance of a fence to permit the following:<br>1) a fence height of 11.13 feet (3.39 metres) in the west side yard instead of 7.5 feet (2.29 metres) as approved under DAV 23-197523/B;<br>2) a fence height of 8.09 feet (2.46 metres) in rear yard instead of 7.5 feet (2.29 metres) as approved under DAV 23-197523/B. |
| **LOCATION:** | 595 Gertrude Ave |
| **LEGAL DESCRIPTION:** | LOT 4 BLOCK 21 PLAN 208 31/5 ST B |
| **APPLICANT:** | Jason Smith<br>595 Gertrude Ave<br>Winnipeg, MB R3L 0M9 |
| **OWNER:** | Jason Smith<br>595 Gertrude Ave<br>Winnipeg, MB R3L 0M9 |

## HISTORY

- In July 2023, a complaint was received regarding fence height.

- In August 2023, a Variance application was received for an increased height of 7.5 feet instead of 6.5 feet and was approved.

- Ongoing and subsequent inspections reveal that the fencing in question is taller than 7.5 feet.

- In November 2026, a new Variance application was received to further increase the fence height.

## DISCUSSION

### CRITERIA FOR APPROVAL

Pursuant to Section 247(3) of *The City of Winnipeg Charter*, an application for a Variance with respect to a property may be approved if the Variance:

(a) is not consistent with *Plan Winnipeg* and any applicable secondary plan;

(b) does create a substantial adverse effect on the amenities, use, safety and convenience of the adjoining property and adjacent area, including an area separated from the property by a street or waterway;

(c) is not the minimum modification of a zoning-by-law required to relieve the injurious effect of the zoning by-law on the applicant's property; and

(d) is not compatible with the area in which the property to be affected is situated.

### SITE DESCRIPTION

- The subject property is located on the north side Gertrude Ave, east of Daly Street North in the Mcmillan neighbourhood of the Fort Rouge - East Fort Garry ward.
- The subject site is 5,995 square feet (556.9 square metres) in area. The site is currently occupied by a two and a half (2 ½) storey 1,925 square foot single-family dwelling built in 1909 and used as a private residence.
- The subject site is accessed by a paved back lane.



**Figure 1: Aerial photo of subject site and surrounding area *(flown 2024)***

**SURROUNDING LAND USE AND ZONING (See Figure 2)**

**North:** Care Home uses zoned “R2” Residential Two-Family

**South:** Single-family residential uses zoned “R2” Residential Two-Family

**East:** Single-family residential uses zoned “R2” Residential Two-Family

**West:** Single-family residential uses zoned “R2” Residential Two-Family

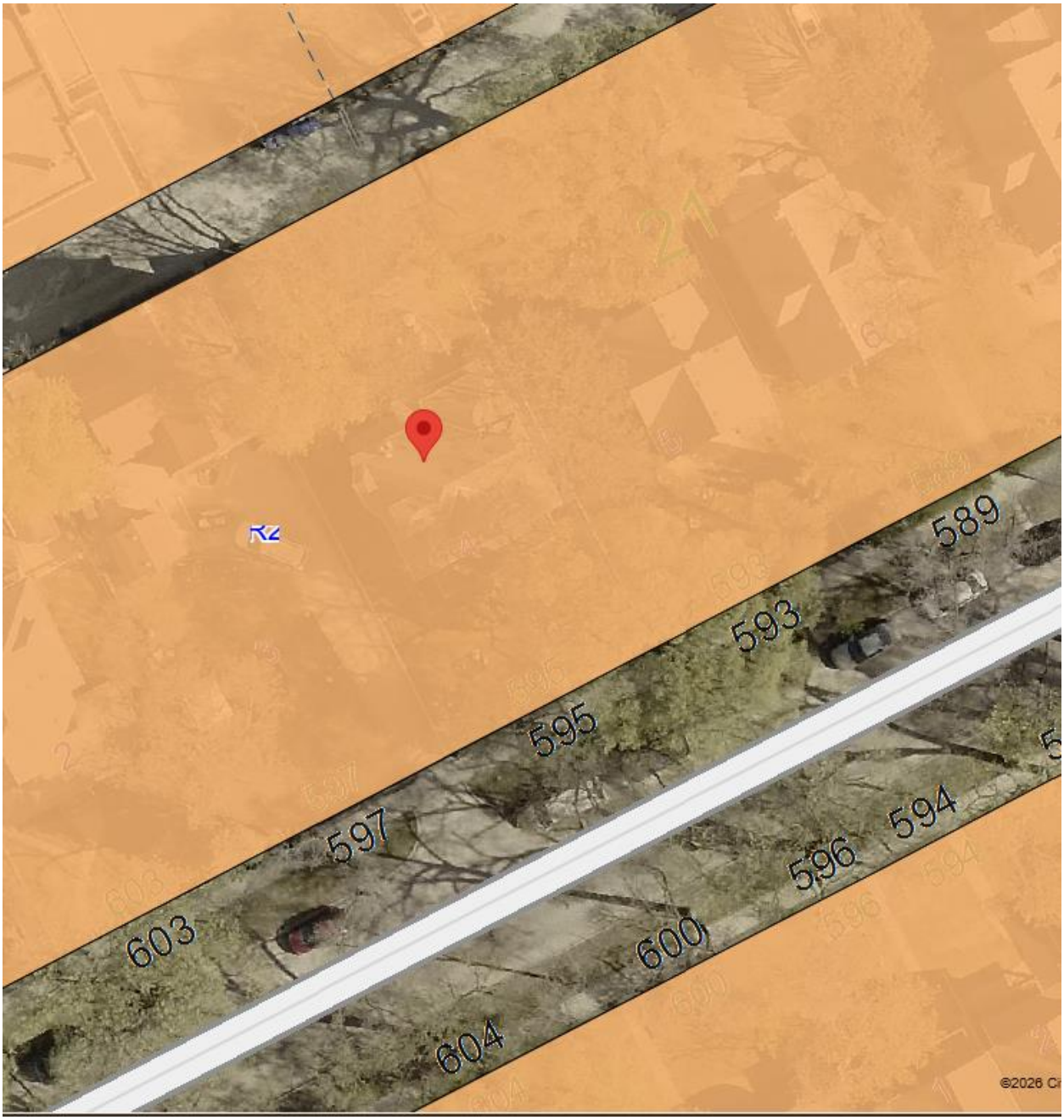

**Figure 2: Zoning of the site and surrounding area.**

## DESCRIPTION OF THE PROPOSED DEVELOPMENT

- The applicant intends to maintain the existing fencing.

### Reason for the Variance

In the “R2” district, fence height requirements are 4 feet in the front yard and 6.5 feet in the side and rear yards.

The applicant intends to maintain the existing fence height of 11.3 feet along a portion of the west side yard and a fence height of 8.09 feet along the rear yard. For these reasons, a Variance is required.

## ANALYSIS AND ISSUES

The increased height of the existing fencing is not compatible with the dwelling or existing fencing on the block and poses a substantial adverse impact upon adjoining properties and the adjacent area.

The existing fence heights far exceed the by-law regulations and what would be supported by Urban Planning. In 2023, the applicant worked with Urban Planning to arrive at a compromised height of 7.5 feet and the applicant advised that they would reduce the fence height accordingly. Further inspections at the site reveal that the applicant did not complete the necessary reduction to the fence height to meet the supported and approved height of 7.5 feet.

If the applicant feels that they require more privacy than they previously were granted via the Variance order from 2023, they can construct some type of lattice like structure that can then be covered in some type of vegetation, in the buildable area of their property. This option would not require a Variance for height so long as it did not exceed 13 feet.



**Figure 3: Fencing along the rear property line.**

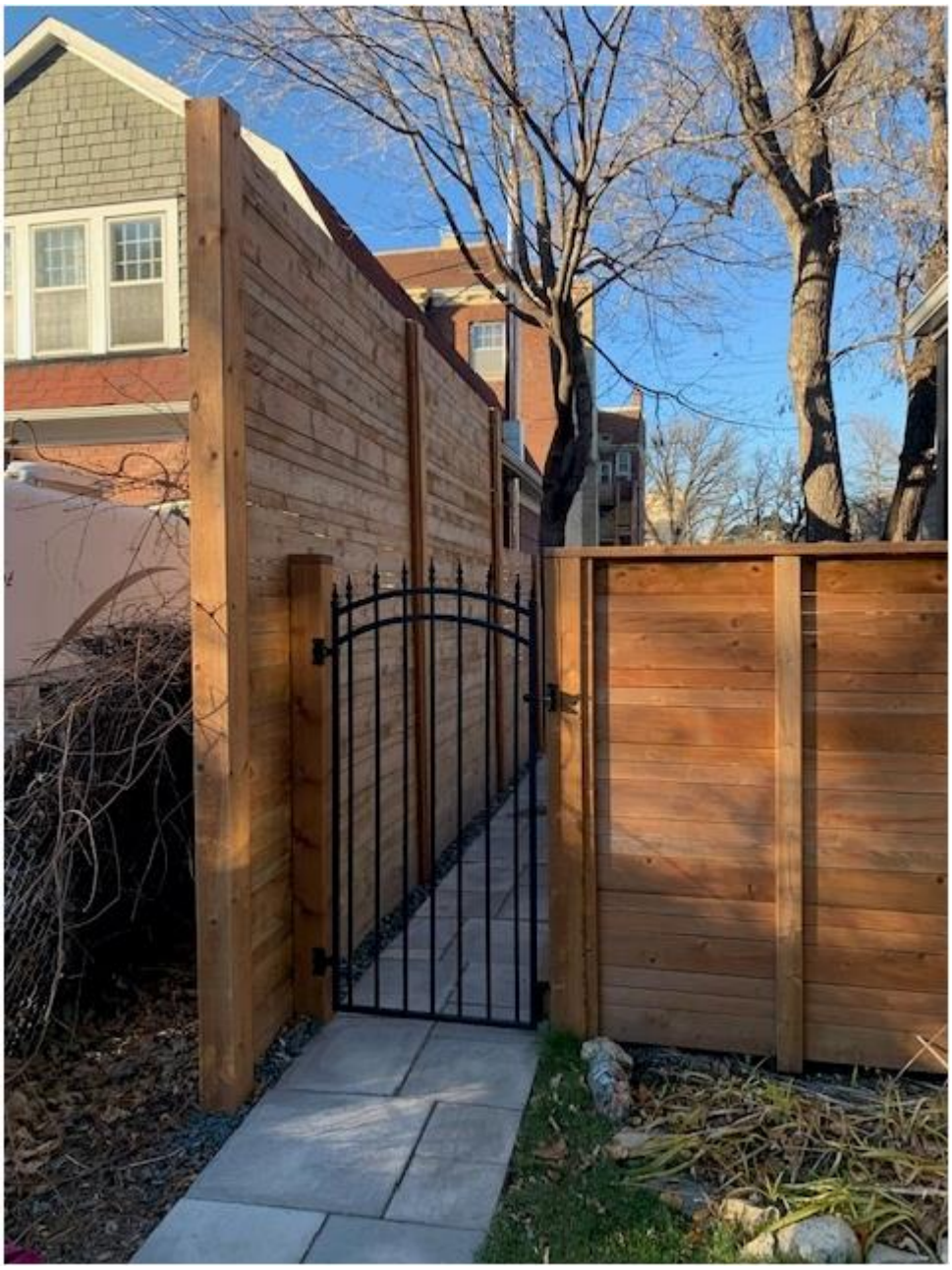

**Figure 4: Fencing along the west property line.**

**REASONS FOR DECISION**

In the context of Section 247(3), the Urban Planning and Design Division **rejects** the application for the following reasons:

(a) is not consistent with *Plan Winnipeg* and any applicable secondary plan;

*In that, the existing fencing not compatible with neighbourhood character and is not complementary to existing development.*

(b) does create a substantial adverse effect on the amenities, use, safety and convenience of the adjoining property and adjacent area, including an area separated from the property by a street or waterway;

*In that, the proposed heights are not compliant and would pose an adverse effect on the adjacent area.*

(c) is the minimum modification of a zoning-by-law required to relieve the injurious effect of the zoning by-law on the applicant's property; and

*In that, the Variances cannot be considered minor modifications of the Zoning By-law due to the proximity of neighbouring properties.*

(d) is compatible with the area in which the property to be affected is situated.

*In that, similar scale fencing has been rejected throughout the City.*

## CONSULTATION

In preparing this report there was internal consultation with: N/A

## OURWINNIPEG 2045 POLICY ALIGNMENT

**OurWinnipeg Goal: City Building**
**Objective 1: Responsibly plan, prioritize and accommodate growth in areas that best support *Complete Communities* principles, to achieve this Plan's sustainable development goals.**

- Facilitate growth and change strategically within Winnipeg's unique Transformative Areas and Established Neighbourhoods, to enhance the ability of the urban environment to contribute towards this Plan's goals.

## WINNIPEG CLIMATE ACTION PLAN ALIGNMENT

Consideration was given to whether this report connects to any of the specific Goals and Objectives in the Winnipeg Climate Action Plan and it was determined the PRS is not applicable to this specific report.

## WINNIPEG POVERTY REDUCTION STRATEGY ALIGNMENT

Consideration was given to whether this report connects to any of the specific Goals and Objectives in the *PRS* and it was determined the *PRS* is not applicable to this specific report.

**SUBMITTED BY**

| | |
|---|---|
| Department: | Planning, Property and Development |
| Division: | Urban Planning and Design |
| Prepared by: | Donna Kane |
| Date: | Friday, February 27, 2026 |
| File No. | DAV 25-262234\B |

Exhibit “8” referred to in File DAV 262234A/2025B




**ZONING AND PERMIT BRANCH**

THIS PLAN IS SUBMITTED FOR APPROVAL IN

CONNECTION WITH: DAV 25-262234/B

SHEET # 1 OF 7

DATE: February 19, 2026

studio b B. ROCKE LANDSCAPING
CONSULT · DESIGN · BUILD
22-530 WATERFRONT DRIVE, WINNIPEG, MANITOBA
R3B 0J7 (204)615-2512

THIS DRAWING SHOULD NOT BE SCALED, ONLY STATED DIMENSIONS ARE TO BE CONSIDERED.

CONTRACTOR SHOULD VERIFY ALL DETAILS/INFORMATION GIVEN ON THIS DRAWING. ANY DISCREPANCIES DISCOVERED SHALL BE BROUGHT TO THE ENGINEERS ATTENTION PRIOR TO COMMENCEMENT OF WORK. FAILURE TO COMPLY WITH THIS ABOVE CLAUSE WILL BE THE CONTRACTOR'S LIABILITY.

ALL DIMENSIONS ARE INDICATED IN FEET AND INCHES.

| PROJECT | SHEET TITLE | | | | NORTH | SHEET NO. |
|---|---|---|---|---|---|---|
| 595 GERTRUDE AVE. | SITE PLAN | | | | | A-00 |
| CLIENT NAME | DRAWN BY | SCALE | UNIT | DATE | | |
| JASON & LYNNE | J.G. Muel | AS SHOWN | FT-INCHES | 11 Aug. 2023 | | |

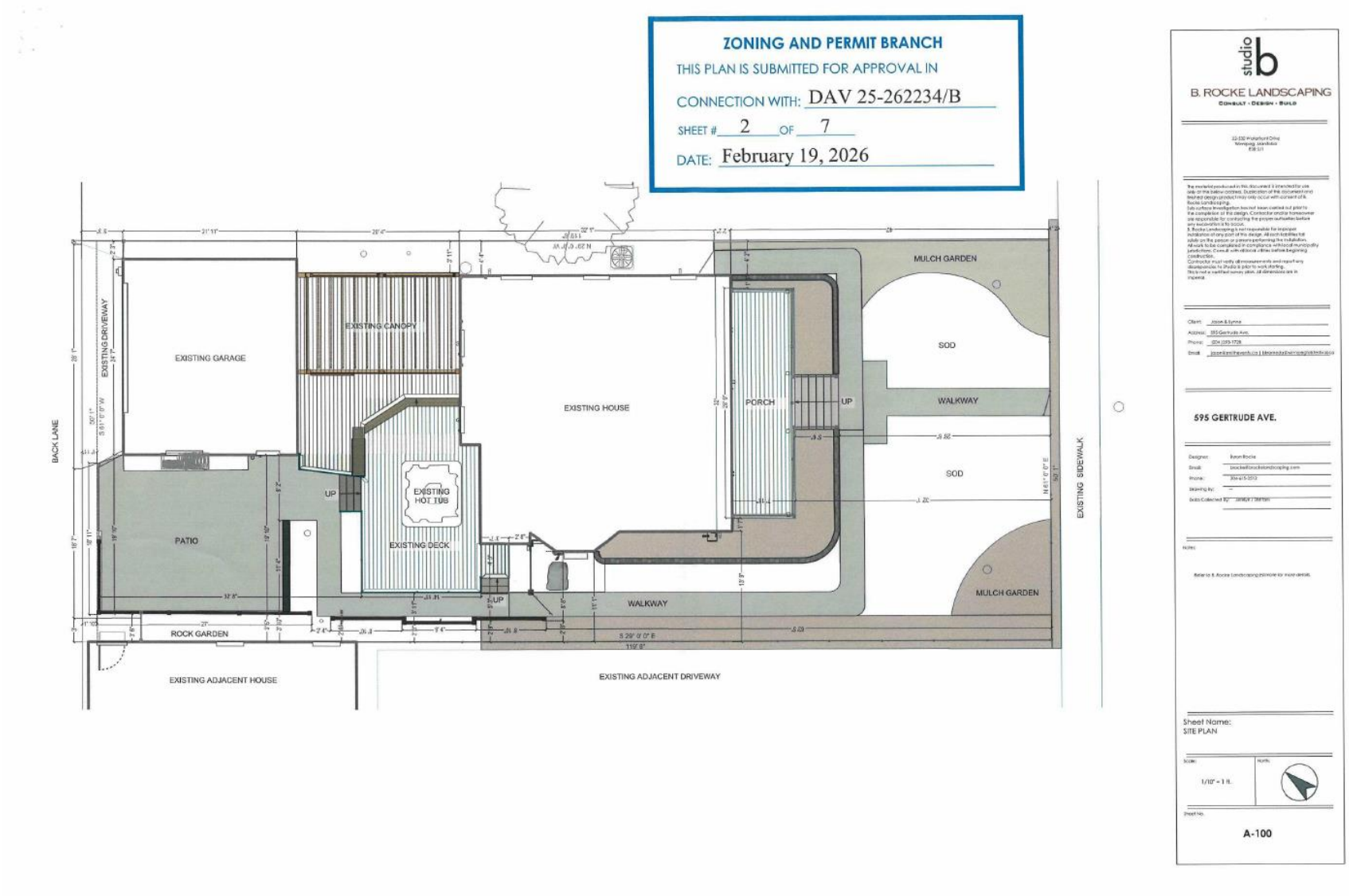
ZONING AND PERMIT BRANCH
THIS PLAN IS SUBMITTED FOR APPROVAL IN
CONNECTION WITH: DAV 25-262234/B
SHEET # 2 OF 7
DATE: February 19, 2026
BACK LANE
EXISTING DRIVEWAY
EXISTING GARAGE
EXISTING CANOPY
EXISTING HOUSE
PORCH
UP
MULCH GARDEN
SOD
WALKWAY
SOD
EXISTING SIDEWALK
PATIO
UP
EXISTING HOT TUB
EXISTING DECK
UP
WALKWAY
MULCH GARDEN
ROCK GARDEN
EXISTING ADJACENT HOUSE
EXISTING ADJACENT DRIVEWAY
studio b
B. ROCKE LANDSCAPING
CONSULT · DESIGN · BUILD
595 GERTRUDE AVE.
Sheet Name:
SITE PLAN
1/10" = 1 ft.
A-100

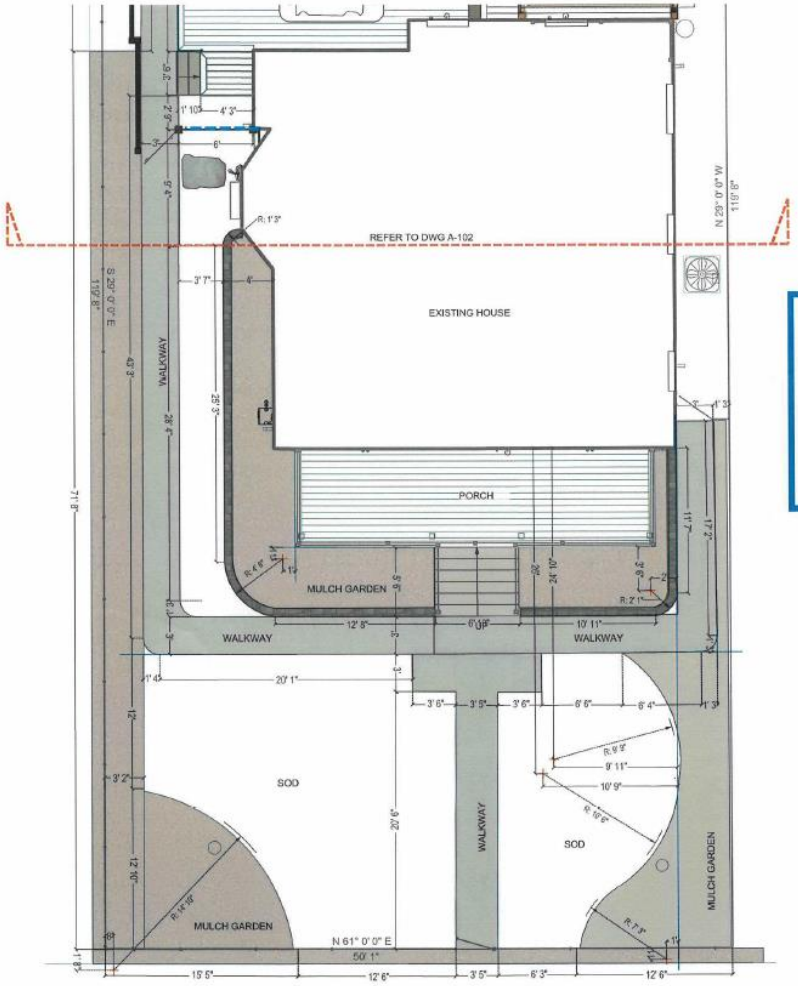


LEGEND

6' H fence w/ 42" ornamental wrought iron gate

**ZONING AND PERMIT BRANCH**

THIS PLAN IS SUBMITTED FOR APPROVAL IN

CONNECTION WITH: DAV 25-262234/B

SHEET # 3 OF 7

DATE: February 19, 2026

studio b

B. ROCKE LANDSCAPING

CONSULT · DESIGN · BUILD

**595 GERTRUDE AVE.**

Sheet Name:
LANDSCAPE LAYOUT
(FRONTYARD)

Scale: 1/8" = 1 ft.

L-101

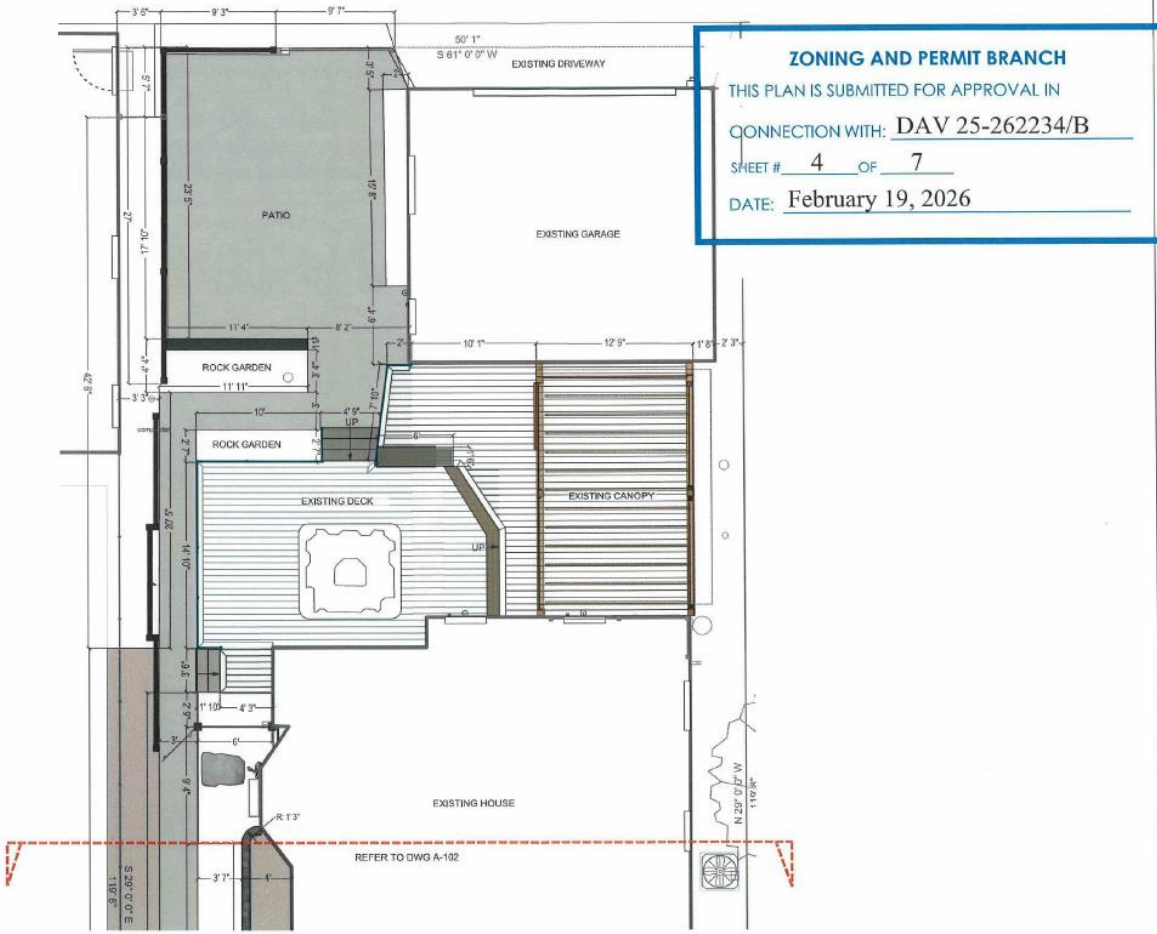


**ZONING AND PERMIT BRANCH**

THIS PLAN IS SUBMITTED FOR APPROVAL IN

CONNECTION WITH: DAV 25-262234/B

SHEET # 4 OF 7

DATE: February 19, 2026

studio b

B. ROCKE LANDSCAPING

CONSULT · DESIGN · BUILD

**595 GERTRUDE AVE.**

Sheet Name:
LANDSCAPE LAYOUT
(BACKYARD)

1/8" = 1 ft.

A-102

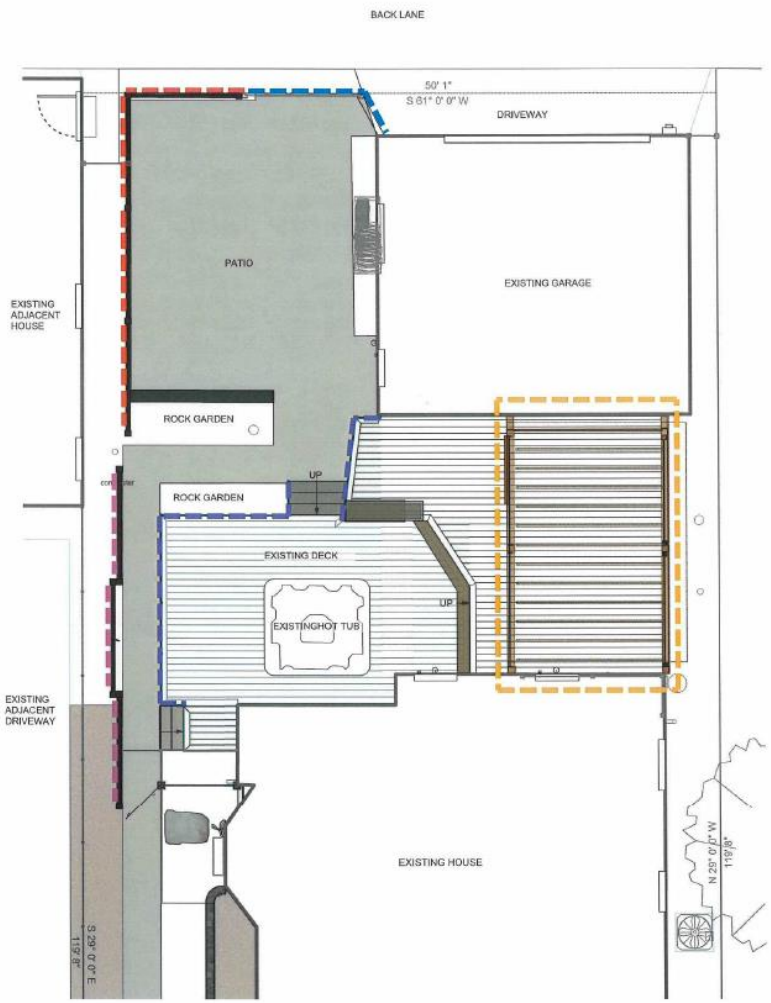


LEGEND

- Existing 8'1" High privacy screen wall
- Existing 11' 1.5" High privacy screen wall
- Existing 3'2" high glass railing
- Existing canopy (Refer to Canopy Plan dwgs by others)
- Existing 8'1"H fence w/ wood gate

**ZONING AND PERMIT BRANCH**

THIS PLAN IS SUBMITTED FOR APPROVAL IN

CONNECTION WITH: DAV 25-262234/B

SHEET # 5 OF 7

DATE: February 19, 2026

studio b

B. ROCKE LANDSCAPING

CONSULT · DESIGN · BUILD

**595 GERTRUDE AVE.**

Sheet Name:
PRIVACY SCREEN
LOCATION LAYOUT

Scale: 1/8" = 1 ft.

Sheet No.

**A-103**




PRIVACY SCREEN (11' 1.5"H)PLAN - West Side




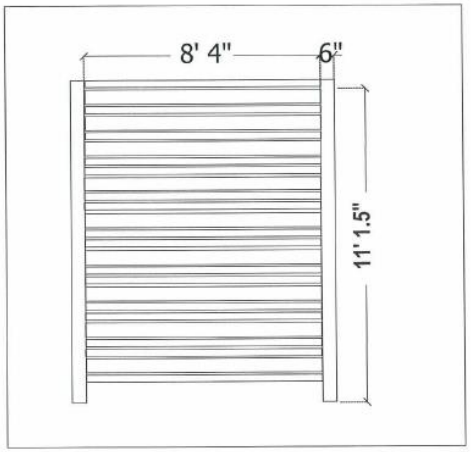


PRIVACY SCREEN (11' 1.5"H) Elevation

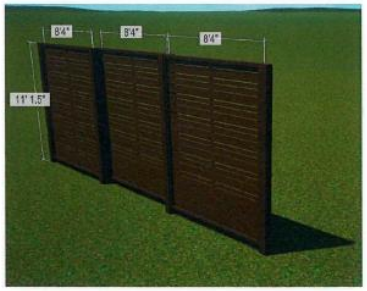


PRIVACY SCREEN (11' 1.5"H) Reference Image

**ZONING AND PERMIT BRANCH**

THIS PLAN IS SUBMITTED FOR APPROVAL IN

CONNECTION WITH: DAV 25-262234/B

SHEET # 6 OF 7

DATE: February 19, 2026

studio b

B. ROCKE LANDSCAPING

CONSULT • DESIGN • BUILD

**595 GERTRUDE AVE.**

Sheet Name:
CARPENTRY

Scale: 1/4" = 1 ft.

D-101

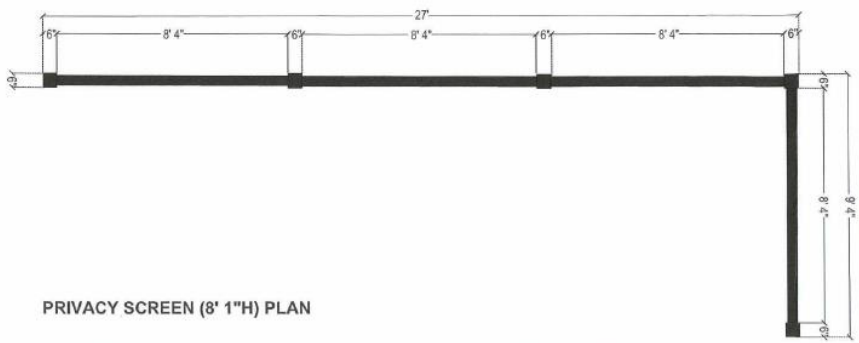


PRIVACY SCREEN (8' 1"H) PLAN

**ZONING AND PERMIT BRANCH**

THIS PLAN IS SUBMITTED FOR APPROVAL IN

CONNECTION WITH: DAV 25-262234/B

SHEET # 7 OF 7

DATE: February 19, 2026





PRIVACY SCREEN (8' 1"H) Reference Image

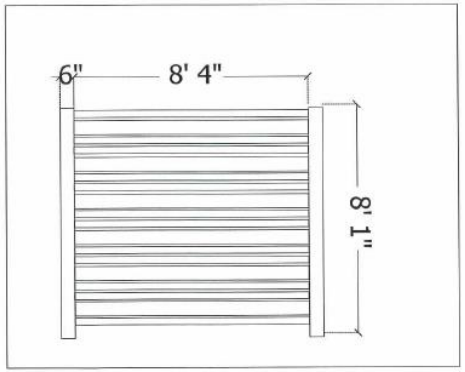


PRIVACY SCREEN (8'1"H) Elevation

studio b

B. ROCKE LANDSCAPING

Conceive • Design • Build

595 GERTRUDE AVE.

Sheet Name:
CARPENTRY

D-102

Exhibit "2" referred to in File DAV 262234A/2025B

**Subject: Appeal – Variance Order DAV 25-262234/B (595 Gertrude Avenue)**

**To the City Clerk – Appeals Committee,**

We are writing to formally appeal Variance Order DAV 25-262234/B issued by the Planning, Property and Development Department regarding the property located at 595 Gertrude Avenue.

The variance application relates to maintaining an existing fence height of approximately 11.13 feet along a portion of the west side yard and 8.09 feet along a portion of the rear yard, where the by-law currently permits a maximum height of 7.5 feet under the previously approved variance.

We respectfully request that the Appeals Committee reconsider this decision on the following grounds:

**Neighbour support and absence of adverse impact**

The inspection that led to this matter appears to have been initiated by a complaint from a property located several houses away, however the immediately adjacent property owners on both sides of the property reviewed the application and provided support, noting that the additional fence height improves privacy for their properties as well.

In light of this direct support from the adjoining property owners, there is no clear evidence to conclude that the fence creates a substantial adverse effect on the amenities, use, safety, or convenience of those properties.

In addition, the variance applies only to a very limited portion of the overall fence - approximately 20% of the total perimeter - with the remainder of the fencing at a standard height of approximately 4 feet. The requested increase is intended to ensure safe and appropriate use of the property and does not negatively impact neighbouring sightlines, adjacent properties, or the character of the surrounding area.

**Limited impact on the public realm**

The fence is situated along one side of the rear yard only, and part of the rear property line, and is not visible from the street frontage of Gertrude Avenue. In addition, the rear portion of the fence is located across a back lane from a parking lot and a large waste and recycling enclosure, and is not directly adjacent to another residential property.

As a result, it does not impact the public streetscape, pedestrian movement, or sightlines, and its effects are confined to private yard areas.

**Reasonableness and function of the variance**

The fence serves a clear and reasonable privacy function in a dense residential context where neighbouring properties are built in close proximity, with a non-standard alignment of the neighbouring home that results in direct sightlines into our rear yard and their interior living spaces.

Notably, the house immediately to the west is set significantly farther back on its lot, with several windows facing directly into our rear yard from their living room, dining room, kitchen, and den.

These sightlines were previously screened by an older garage structure that had deteriorated and required removal. The increased fence height restores privacy for both properties in approximately the same area previously occupied by the garage and is lower in height than that original structure by several feet.

The variance seeks to maintain an existing condition that improves privacy between properties without creating impacts on public space. It also contributes to improved security at the rear of the property, where access from the lane has been an ongoing concern due to repeated break-ins and vandalism.

**Internal inconsistency within the planning analysis**

The administrative report notes that a lattice structure with vegetation could be constructed up to approximately 13 feet in height without requiring a variance, provided it is located within the buildable area of the property. This suggests that a structure of comparable or greater height may be permitted in an alternate form, while the existing structure - serving a similar function - is deemed incompatible.

This inconsistency makes it difficult to understand how the proposed fence height can reasonably be characterized as creating a substantial adverse effect or being incompatible with the surrounding area. It would also result in the unnecessary removal of an existing structure, only to replace it with a functionally similar alternative at significant cost and waste.

**Previous variance context**

It is also worth noting that a previous variance application was approved for a fence height of 7.5 feet in this location, reflecting the City's recognition of the unique conditions affecting this portion of the property. The current request represents a modest increase beyond that approval for a limited portion of the fence and avoids unnecessary costs associated with removing and rebuilding existing structures.

**Additional context**

We would also like to acknowledge that the current fence was constructed as part of a larger renovation project and that a permitting issue arose due to a miscommunication between contractors. Once we became aware that the fence did not comply with the applicable requirements, we paid the appropriate fines and followed the proper process by submitting a variance application so the matter could be reviewed appropriately.

This oversight was unintentional, and all other work - including a new garage, deck, and screened-in porch - was completed with the proper permits and in compliance with applicable requirements.

For the foregoing reasons, we respectfully request that the Appeals Committee allow the variance and permit the existing fencing to remain.

Thank you for your consideration.

Sincerely,
Jason Smith & Lynne Skromeda

## Request for Support of a Zoning Variance

Signatures of support from adjoining impacted neighbours.

Date: AUGUST 7, 2023

To: The City of Winnipeg
Planning, Property and Development Department
Zoning and Permits
31 – 30 Fort Street
Winnipeg, Manitoba R3C 4X7

RE: 595 GERTRUDE AVE. (address or legal description of application)

I consulted with my neighbours on my request for relief on the following zoning restriction(s) at the above referenced premises.

Please provide a brief description of the proposed work to be varied in the space provided below.
The project is an increased fence height on the west and north sides of the backyard.

The following neighbours support/do not oppose my request for a Zoning Variance:

| Name | Address | Daytime Phone Number | Signature(s) |
|---|---|---|---|
| MIKE JACKSON | | | M. Jackson |
| AMY JACK | | | Amy Jack |
| Barbara Huck | | | Barbara Huck |
| Peter Sivak | " | " | Peter Sivak |
| | | | |

Your personal information is being collected consistent with the requirements and limitations set out under *The Freedom of Information and Protection of Privacy Act (FIPPA)*. This collection of personal information is authorized by section 36(1)(b) of The FIPPA for the administration of *Winnipeg Zoning Procedures By-law No. 200/2006*. Your information is protected by FIPPA's privacy provisions and will not be used or disclosed for any other purpose, except as authorized by law. Contact the City of Winnipeg's Corporate Access and Privacy Officer by mail (City Clerk's Department, Susan A. Thompson Building, 510 Main Street, Winnipeg MB, R3B 1B9) or by telephone (311) if you have questions about this collection of your personal information.

Exhibit “1” referred to in File DAV 262234/2025B

DAV 25-262234/B

APPLICANT: JASON SMITH
595 GERTRUDE AVE
WINNIPEG MB R3L 0M9

PREMISES AFFECTED: 595 Gertrude Avenue
LEGAL DESCRIPTION: LOT 4 BLOCK 21 PLAN 208 31/5 ST B
hereinafter called "the land".
PROPERTY ZONED: R2
ZONING ATLAS SHEET: AB24
NATURE OF APPLICATION:

To vary the "R2" Development and Design Standards of Winnipeg Zoning By-Law No. 200/2006 for the maintenance of a fence to permit the following:
1) a fence height of 11.13 feet (3.39 metres) in the west side yard instead of 7.5 feet (2.29 metres) as approved under DAV 23-197523/B;
2) a fence height of 8.09 feet (2.46 metres) in rear yard instead of 7.5 feet (2.29 metres) as approved under DAV 23-197523/B.

It is the opinion of the Director of Planning, Property and Development Department that this application does not meet the statutory criteria of the City of Winnipeg Charter in that it:

(a) is not consistent with Plan Winnipeg and any applicable secondary plan;
(b) does create a substantial adverse effect on the amenities, use, safety and convenience of the adjoining property and adjacent area, including an area separated from the property by a street or waterway;
(c) is not the minimum modification of a zoning by-law required to relieve the injurious effect of the zoning by-law on the applicant's property; and
(d) is not compatible with the area in which the property to be affected is situated.

C.W. Charter Subsection 247(3)

ORDER:

RE: 595 Gertrude Avenue

The Director of Planning, Property and Development Department hereby orders that the provisions of the "R2" dimensional standards of Zoning By-Law No. 200/2006 and amendments thereto for the maintenance of a fence to permit the following a fence height of 11.13 feet (3.39 metres) in the west side yard and a fence height of 8.09 feet (2.46 metres) in rear yard **is hereby REJECTED.**

DATE OF ORDER: March 09, 2026

CERTIFIED BY:



for Director Planning, Property and Development Department

HOW TO APPEAL

You can appeal this order by filing a letter of appeal with the City Clerk. Note that, in filing the appeal, the entirety of the order is subject to review by the designated committee at the appeal hearing. The appeal letter must:

(a) be addressed as set out below,

(b) be received at that office not later than 4:30 p.m. on March 23, 2026
[IF RECEIVED LATE YOUR APPEAL CANNOT BE HEARD.]

(c) refer to Variance Order No. DAV 25-262234/B, give brief reasons and describe whether you appeal the whole order or only part(s) of it.

You can attend the appeal hearing and speak on issues raised in someone else's appeal; but the designated committee can only rule on issues raised in appeals filed. If you are not sure what others have appealed you should file your own appeal.

Address: City Clerk, City of Winnipeg
c/o Appeals Committee
Susan A. Thompson Bldg.
510 Main Street
Winnipeg, MB, R3B 1B9
Fax 947-3452
Email: clk-appeals@winnipeg.ca