Agenda – Standing Policy Committee on Public Works – June 29, 2026

REPORTS

Item No. 14 Pedestrian Scramble Pilot

WINNIPEG PUBLIC SERVICE RECOMMENDATION:

1. That this report be received as information.

Agenda – Standing Policy Committee on Public Works – June 29, 2026

DECISION MAKING HISTORY:

STANDING COMMITTEE RECOMMENDATION:

On April 15, 2026, the Standing Policy Committee on Public Works concurred in the recommendation of the Winnipeg Public Service and granted an extension of time of 90 days to report back on the following:

1. An update on the results of the Pedestrian Scramble Pilot at the intersection of King Street and Bannatyne Avenue.

STANDING COMMITTEE DECISION:

On March 4, 2025, the Standing Policy Committee on Public Works concurred in the recommendation of the Winnipeg Public Service and approved the following:

1. That the Public Service be directed to report back to Standing Policy Committee on Public Works in April 2026 on the results of the Pedestrian Scramble Pilot at the intersection of King Street and Bannatyne Avenue.

The following persons submitted communications:

- David Grant, in opposition to the matter
- Max Schreckenbach, in opposition to the matter

STANDING COMMITTEE RECOMMENDATION:

On November 29, 2024, the Standing Policy Committee on Public Works granted a further extension of time of 90 days for the Winnipeg Public Service to report back on a scope of work for options for a scramble pedestrian crossing pilot in 2025, within the City of Winnipeg, as per the Road Safety Strategy.

David Grant submitted a communication in opposition to the matter.

On September 12, 2024, the Standing Policy Committee on Public Works concurred in the recommendation and granted an extension of time of 90 days for the Winnipeg Public Service to report back on a scope of work for options for a scramble pedestrian crossing pilot in 2025, within the City of Winnipeg, as per the Road Safety Strategy.

David Grant submitted a communication in opposition to the matter.

DECISION MAKING HISTORY (continued):

STANDING COMMITTEE RECOMMENDATION (continued):

On April 9, 2024, the Standing Policy Committee on Public Works directed the Winnipeg Public Service to report back in 120 days with a scope of work for options for a scramble pedestrian crossing pilot in 2025, within the City of Winnipeg, as per the Road Safety Strategy.

ADMINISTRATIVE REPORT

Title: Pedestrian Scramble Pilot

Critical Path: Standing Policy Committee on Public Works

AUTHORIZATION

Author	Department Head	CFO	CAO
D. Patman, P.Eng.	J. Berezowsky	N/A	M. Pittet, acting for J. Dunford

EXECUTIVE SUMMARY

The Standing Policy Committee asked the Public Service for a review of options for a pedestrian scramble pilot.

A pedestrian scramble is a type of traffic signal. It provides a phase for pedestrians to cross the street in both directions at the same time. During the “scramble” part of the signal, all motor vehicles have a red light.

In June 2025, the Public Service tested a pedestrian scramble at King Street and Bannatyne Avenue. The pilot included signal timing changes and public education. No construction or road changes were needed. The Public Service reviewed the pilot using public feedback and a safety assessment.

Feedback from the public was mixed. Many pedestrians said the scramble made them feel safer and more comfortable. Others said the intersection was already safe before the pilot. Some nearby residents said the audible signal was too loud.

The safety review found some benefits. After the scramble was installed, fewer people crossed during the “Don’t Walk” signal. About half of pedestrians crossed during the protected scramble phase. However, the number of pedestrians at this location was too low to strongly support this type of signal. In several scramble phases, no pedestrians crossed at all.

The review also found that the intersection had a good safety record before the pilot. There has been only one pedestrian collision in the last 10 years.

Overall, the pedestrian scramble improved pedestrian priority and safety. However, it was only moderately effective at this location because it was not used often enough. Pedestrian scrambles work best in places with much higher pedestrian traffic.

Based on these findings, the Public Service plans to end the pilot. The pedestrian scramble at King Street and Bannatyne Avenue will be removed. The signal will return to its previous operation. This will also include Leading Pedestrian and Bike Intervals.

No other pedestrian scrambles are planned right now. They may be considered in the future if suitable locations are identified.

RECOMMENDATIONS

That this report be received as information.

REASON FOR THE REPORT

On March 4, 2025, the Standing Policy Committee on Public Works concurred in the recommendation of the Winnipeg Public Service and approved the following:

1. That the Public Service be directed to report back to Standing Policy Committee on Public Works in April 2026 on the results of the Pedestrian Scramble Pilot at the intersection of King Street and Bannatyne Avenue.

On April 15, 2026, the Standing Policy Committee on Public Works concurred in the recommendation of the Winnipeg Public Service and granted an extension of time of 90 days to report back.

IMPLICATIONS OF THE RECOMMENDATIONS

Receiving this report as information will result in the conclusion of the pilot and the removal of the pedestrian scramble installed at King Street and Bannatyne Avenue. The signal will return to its previous operations.

HISTORY/DISCUSSION

BACKGROUND

A pedestrian scramble was piloted at the intersection of King Street and Bannatyne Avenue to assess suitability and potential safety benefits. A pedestrian scramble is a type of signalized intersection that provides a dedicated phase for pedestrians to cross the street in all directions, which may or may not include on a diagonal. During the “scramble” portion of the phase, all motor vehicles have a red light while pedestrians are permitted to cross. Pedestrian scrambles can improve safety by giving pedestrians an exclusive crossing phase in all directions, but they are only effective in the right context.

Pedestrian scrambles are best suited at small intersections with consistent, high pedestrian activity, low vehicle volumes, short diagonal crossing lengths, and strong nearby pedestrian destinations. If used at unsuitable locations, they can increase delay for all users, reduce compliance, and limit the intended safety benefits.

To select a pilot location, Public Works screened approximately 30 signalized locations using pedestrian and vehicle volumes, collision history, project coordination opportunities, land use context, and input from internal stakeholders.

King Street and Bannatyne Avenue was selected as the preferred pilot site due to its location adjacent to Old Market Square, relatively high pedestrian activity and placemaking potential.

Signal operation modelling also indicated that a scramble phase would reduce pedestrian delay with only a moderate increase in vehicle delay.

A pedestrian scramble without diagonal crossings was piloted; this was a low-cost alternative that did not require physical infrastructure changes. Figure 1 shows how the signal timing was modified to accommodate the pedestrian scramble phase.

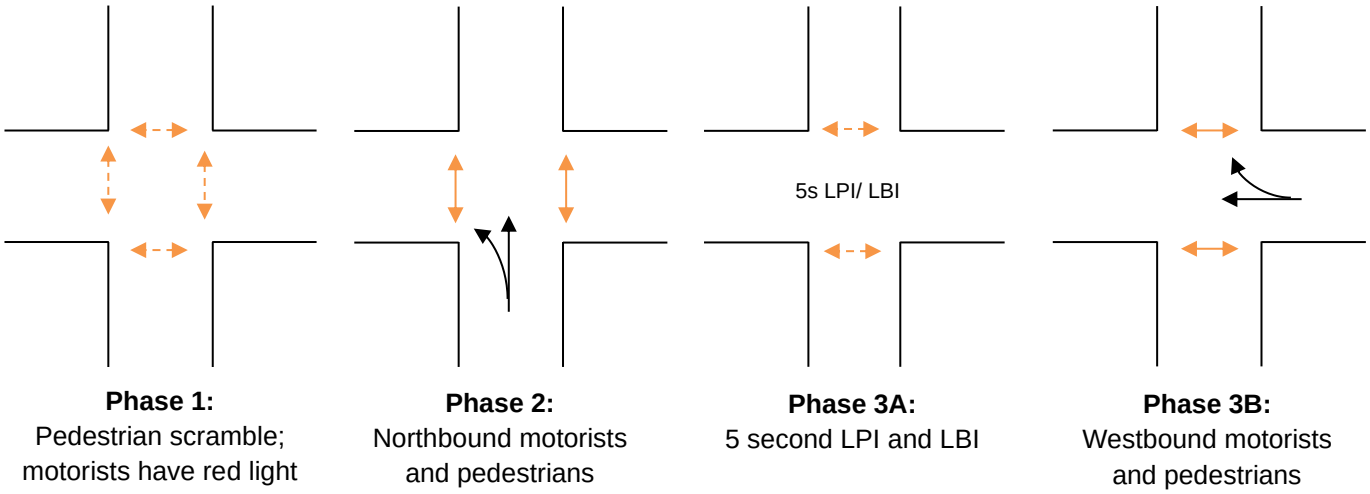

Figure 1: Pedestrian scramble signal phasing

PILOT PROJECT OVERVIEW

The pedestrian scramble pilot project included several key phases: stakeholder engagement, implementation, public awareness and education events, and monitoring and evaluation.

Stakeholder engagement

In preparation for the pedestrian scramble, the Public Service reached out to key stakeholders including the accessibility community, the Exchange District Biz and fronting business owners to obtain feedback and distribute information about the upcoming project.

Engagement with members from the accessibility community with vision impairments was important for discussing the audible indication that would be emitted during the scramble phase. This sound must be distinct from the tone emitted for east/west and north/south crossings. Currently, there is no standard practice for this in Canada. Following the engagement sessions, the message “Walk sign is on for all crossings,” was selected for the audible indication. It was repeated in both English and French throughout the duration of the scramble phase.

Implementation

The pedestrian scramble pilot project was implemented on June 2, 2025. Due to the low-cost alternative, no construction was required and the signal operations were remotely updated to include the scramble phase. The pedestrian scramble operated 24 hours a day, seven days a week.

Public awareness and education events

To alert Winnipeggers of the signal change, a news release was shared, and advance warning signage was installed on the roadway approaches and at all corners of the intersection, as shown in Figures 2 and 3, below.

Figure 2: Four advance warning signs were placed to alert drivers of the upcoming pedestrian scramble

Figure 3: Informational signs were placed around the intersection to alert pedestrians of the change

During the first week of implementation, Public Works employees were on-site during morning and afternoon peak traffic to monitor and communicate with pedestrians and drivers. Three pop-up events were also held during periods with high pedestrian activity to increase awareness of the pedestrian scramble. The overall cost to implement the pedestrian scramble was approximately $2700.

EVALUATION AND MONITORING

An evaluation and monitoring plan was established to assist the Public Service in assessing the pilot. It consisted of two main components: a public feedback survey and a safety assessment.

Public feedback survey

The survey was promoted using on-site signage to target responses from people who used the pedestrian scramble. Due to the survey sign placement, the data was skewed towards people crossing on foot and only a few drivers completed the survey. The survey could be completed online or by telephone.

Sixty-four people completed the survey over a 10-month period from June 2025 to March 2026. Based on the survey, 57 percent of pedestrians felt more comfortable with the pedestrian scramble, whereas 32 percent of pedestrians and 50 percent of drivers felt that the intersection was just as safe as before.

The survey responses were mixed, expressing both support and concern for the pedestrian scramble. Many respondents felt that the pedestrian scramble made the intersection faster and safer for pedestrians and expressed a desire for more pedestrian scrambles. Conversely, some respondents felt there was no change at the intersection and that it was already safe to begin with. Respondents who lived near the intersection shared concern about the noise from the new audible signal; local residents found the sound of the audible alerts at the crossings too loud.

A summary of the public engagement survey as well as the survey questions and detailed responses can be found in Appendix A and B.

Safety assessment
Video data was collected for one week before and after the pedestrian scramble was implemented. Several hours of peak period video were manually reviewed. Pedestrian counts were conducted, and collision data was reviewed. The following provides an overview of the safety assessment findings.

Pedestrian volumes

- Pedestrian movements were similar before and after implementation with approximately 2,000 pedestrians crossing in a 12-hour period. These volumes are considerably lower than what is required for pedestrian scramble operation in other Canadian cities. Other jurisdictions require pedestrian volumes to be more than 2,000 in a one-hour period.

Scramble phase use

- Approximately 50 percent of all pedestrian crossings occurred during the scramble phase when pedestrians are fully protected from conflicts with vehicles. This suggests a minor safety improvement because pedestrians are not at risk of vehicle conflict during that part of the signal phase.
- Pedestrians can make an “L shaped” crossing during the scramble phase. Only a few individuals were observed to cross both legs as part of their journey, which indicates that there is low demand for diagonal movements.
- An average of 25 percent of the scramble phases in the AM/PM peak periods had no pedestrians crossing. This was especially common in the morning, illustrating the lower pedestrian crossing demands at the intersection.
- Although not specifically observed, motorists who regularly wait on red during scramble phases when no pedestrians are crossing may become frustrated with the perceived unnecessary delay and non-compliance may increase over time.

Pedestrian violations (i.e., crossing during the “Don’t Walk”)

- Sixteen percent of pedestrians crossed during the “Don’t Walk” before the pedestrian scramble was installed. These were most commonly on the east and west crosswalks when there were large gaps in traffic on Bannatyne Avenue.
- Nine percent of pedestrians crossed during the ‘Don’t Walk’ after the pedestrian scramble was installed. The seven percent reduction in pedestrian violations is likely because pedestrians have more crossing time allocated in the signal cycle.

Vehicle violations (i.e., turning or proceeding through on red)

- Red light turn restrictions prevent drivers from turning during the scramble phase when at a red light. A “no right turn on red” restriction was already in place on Bannatyne Avenue, and a new “no left turn on red” restriction was implemented on King Street when the pedestrian scramble was installed.
- Turning violations were relatively infrequent before and after the pedestrian scramble implementation. Only four vehicles were observed to turn on red in the before period, which increased to nine afterwards. One-third of the “after” violations were due to the new red light turn restriction on King Street.
- One vehicle was observed to drive through a red light during the scramble phase.

Vehicle delay observations

- The northbound vehicle queues on King Street increased after the pedestrian scramble was installed but did not appear to result in any safety concerns.

- The westbound queue on Bannatyne Avenue extended from Princess Street to King Street at various times throughout the day, sometimes blocking the west crosswalk and extending into the intersection. The scramble phase impacts coordination with adjacent signals, especially at off-peak periods, which increases driver delay.

Collision history and near-misses

- Collision data indicates that the intersection was already operating at a reasonable level of safety prior to the pedestrian scramble implementation. This aligns with feedback from several survey respondents who indicated that the intersection was already safe prior to the pedestrian scramble.
- Ten years of the most recent collision data was reviewed. Between 2014 and 2023, 39 collisions occurred at King Street and Bannatyne Avenue, 82 percent of which resulted in property damage only. Right-angle collisions were one of the most common collision types: 10 were due to red light running and one resulted in a minor injury. One pedestrian collision occurred and resulted in a minimal injury.
- Collision data is not available for the after period and therefore comparison is not possible.
- Review of video footage revealed very few near-misses before and after implementation. A few conflicts were observed between cyclists who crossed during the scramble phase and pedestrians.

DISCUSSION

The monitoring and evaluation results identified that the pedestrian scramble was

- received with mixed public feedback, with many pedestrians reporting improved comfort and others stating that the intersection was already safe;
- somewhat effective at improving pedestrian compliance and providing a fully protected crossing opportunity, despite limited use; and
- not strongly justified by pedestrian demand, collision history, or observed near miss patterns at this intersection.

Although King Street and Bannatyne Avenue met many of the early suitability and screening criteria, pedestrian scrambles should ultimately be reserved for locations with significantly higher and more sustained pedestrian volumes. The pedestrian volumes observed at this intersection are approximately one-twelfth that of which is required to operate a pedestrian scramble in other Canadian cities. At this time, it may be unlikely that there are intersections in the City of Winnipeg with high enough pedestrian volumes to make a pedestrian scramble operationally feasible.

Prior to the pedestrian scramble, Leading Pedestrian/Bike Intervals (LPIs/LBIs) were installed at King Street and Bannatyne Avenue in March 2025 as part of the downtown roll-out. LPIs/LBIs provide pedestrians and cyclists with a head start to cross the intersection before motorists receive a green light. An LPI/LBI provides safety improvements with less significant impacts on vehicle operations than a pedestrian scramble. Research from other jurisdictions shows that LPIs can reduce pedestrian collisions by 13 percent and the downtown LPI roll-out in Winnipeg also found reductions in pedestrian near miss events at many intersections.

Video review of the LPI/LBI at King Street and Bannatyne Avenue showed that pedestrians made good use of the LPI phase and were able to establish themselves in the intersection. In some cases, pedestrians were able to completely cross Bannatyne Avenue during the LPI.

As such, the Public Service intends to end the pilot, remove the pedestrian scramble, and revert to the previous signal operations with LPI/LBIs. Additional pedestrian scrambles are not planned at this time but could be explored in the future if suitable candidate locations arise.

FINANCIAL IMPACT

Financial Impact Statement **Date:** May 20, 2026

Project Name:

Pedestrian Scramble Pilot

COMMENTS:

As this report is for information purposes, there are no financial impacts. The existing signals infrastructure will be returned to the previous timing using existing operational staff.

J. Ruby, 2026-05-21
J. Ruby CPA, CA
Manager of Finance & Administration

CONSULTATION

This Report has been prepared in consultation with: n/a

OURWINNIPEG POLICY ALIGNMENT

This report is in accordance with OurWinnipeg2045 as per:

Good Health and Well-Being Goal

- Policy 4.10 Transportation Safety
  Design, construct, maintain, and regulate an integrated and sustainable transportation system and related infrastructure that optimize safe, connected and reliable mobility, and minimize severe injuries and fatalities for all road users

Economic Prosperity Goal

- 3.17 Sustainable Transportation Connectivity
  Prioritize enhancements to the integrated and sustainable transportation system that improve its viability and access to places such as educational institutions, employment opportunities, recreation and library facilities, providers of essential goods and services and health providers, especially for children, and for neighbourhoods most impacted by poverty.

The conclusion of the pedestrian scramble pilot is not considered to be detrimental to the identified OurWinnipeg2045 goals. The previous operations were observed to provide safe, efficient access for sustainable modes.

WINNIPEG CLIMATE ACTION PLAN ALIGNMENT

This report is in alignment with the Winnipeg Climate Action Plan (WCAP) as per Directions 3.1 Increase Use and Efficiency of Public Transit Systems and 3.4 Increase Active Transportation Rates. Relevant actions include: Improve active transportation connectivity to transit services by installing sidewalks and cycling routes to link stops with the surrounding community, and prioritize capital investments in active transportation to establish connected and integrated corridors for walking and cycling.

WINNIPEG POVERTY REDUCTION STRATEGY ALIGNMENT

This report is in alignment with the Winnipeg Poverty Reduction Strategy as per *Goal 5: Transportation System Equity is Enhanced* – the affordability and accessibility of transportation and transit service is increased through the implementation of pedestrian and cycling improvements.

SUBMITTED BY

Department: Public Works
Division: Transportation
Prepared by: A. Pushka, M.Sc., P.Eng., RSP2I, Road Safety Engineer
Date: May 22, 2026
Attachments:

Appendix A – Public engagement summary report

Appendix A – Public engagement summa

Appendix B – Survey questions and detailed responses

Appendix B – Survey questions an