*Please note: Approved plans are subject to any amendments or conditions made by Community Committee.

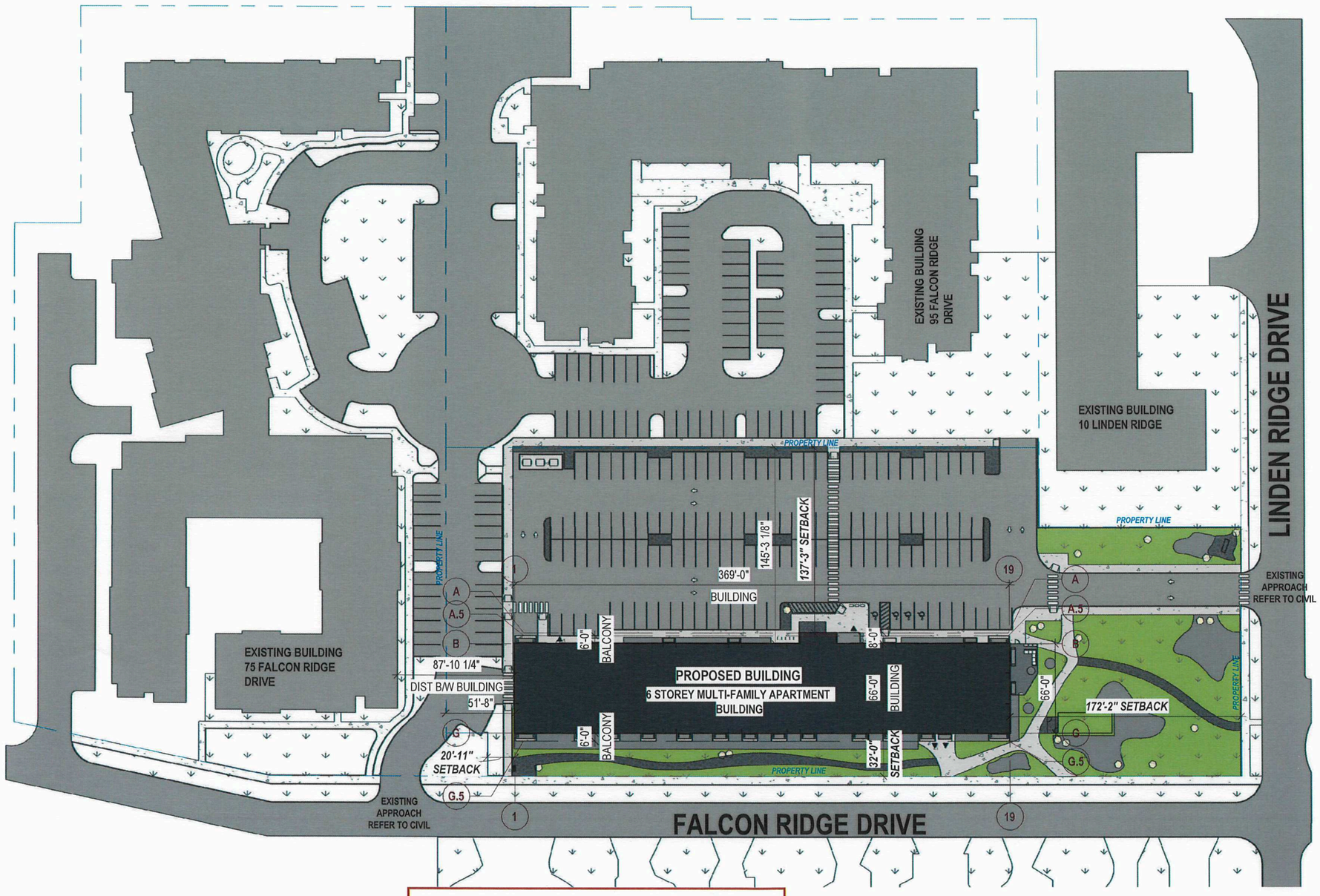

1 / PA21 PA OVERALL KEY PLAN - CONTEXT
1" = 80'-0"

N

SCHEDULE "A" page 1 of 12
To Zoning Agreement: DASZ 21/1998
By-Law No.: 7343/1998

Zoning Officer	Jaspreet Bhuller	June 15, 2026
District Planner		June 19/26
Community Clerk		June 30/26
Approved for the Director of Planning, Property and Development		

PRELIMINARY DRAWING ONLY
NOT TO BE USED FOR CONSTRUCTION

BLDG architecture office inc.
3-692 Osborne Street
Winnipeg, Manitoba
Canada, R3L 2B9
T: 204.417.5884
E: info@bldgoffice.com

PROJECT
FALCON RIDGE
OVERALL KEY PLAN - CONTEXT
Address
DWG BY BLDG REV'D BY KS
DATE 01/16/2026
SCALE 1" = 80'-0"
PROJECT NO. 2025_18
DRAWING NO. **PA03**

*Please note: Approved plans are subject to any amendments or conditions made by Community Committee.

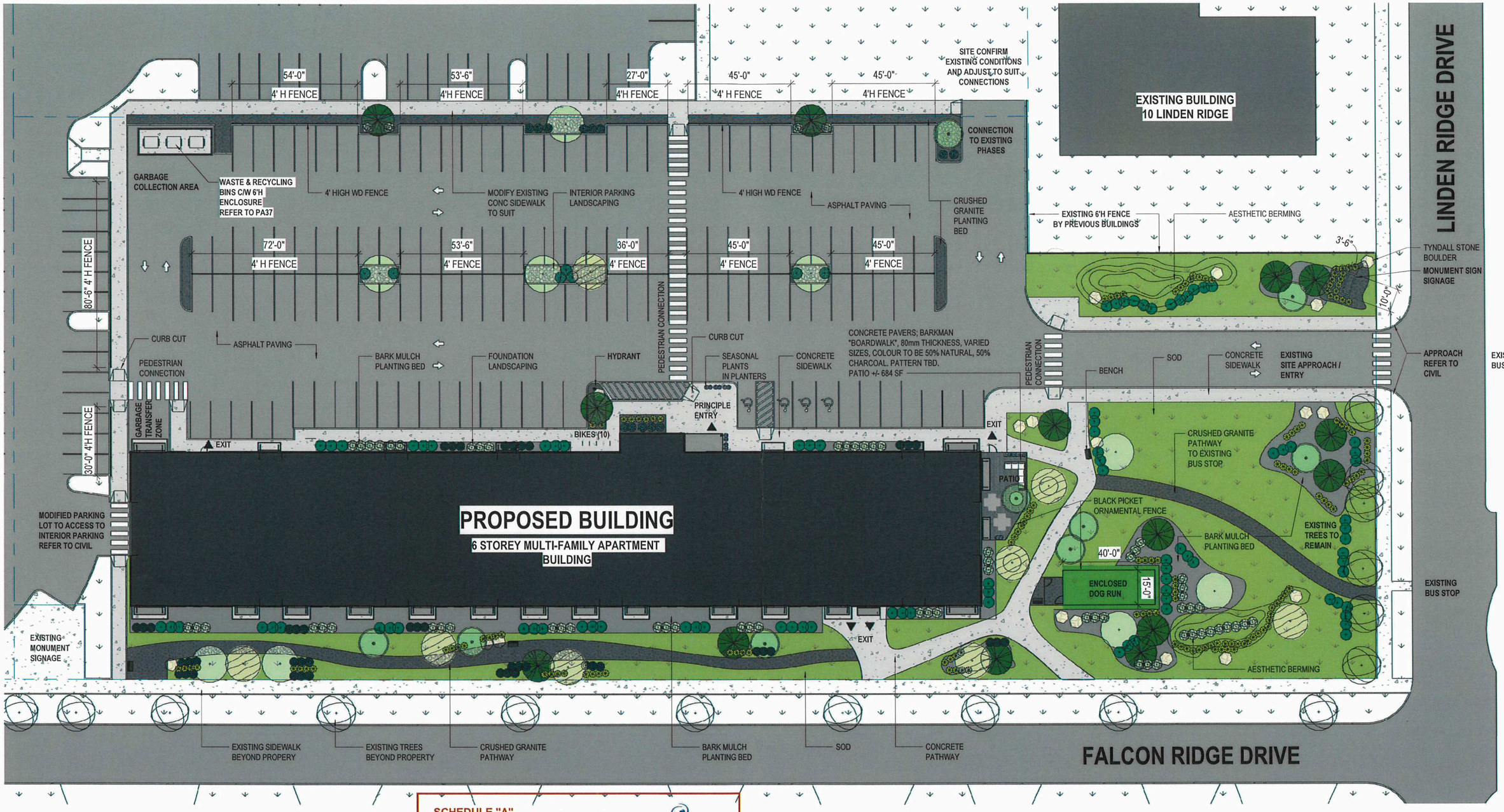

1 PA - COLORED LANDSCAPE PLAN
1" = 40'-0"

SCHEDULE "A" page 2 of 12

To Zoning Agreement: DASZ 21/1998

By-Law No.: 7343/1998

Winnipeg

Zoning Officer	Jaspreet Bhullar	June 15, 2026
District Planner		June 19/26
Community Clerk		June 30/26
Approved for the Director of Planning, Property and Development		

N

PRELIMINARY DRAWING ONLY
NOT TO BE USED FOR CONSTRUCTION

BLDG architecture office inc.
3-692 Osborne Street
Winnipeg, Manitoba
Canada, R3L 2B9
T: 204.417.6884
E: info@bldgoffice.com

PROJECT
FALCON RIDGE
SITE PLAN - LANDSCAPE COLORED
Address
DWG BY BLDG REV'D BY KS
DATE 04/27/2026
SCALE 1" = 40'-0"
PROJECT NO. 2025_18
DRAWING NO. **PA04**

*Please note: Approved plans are subject to any amendments or conditions made by Community Committee.

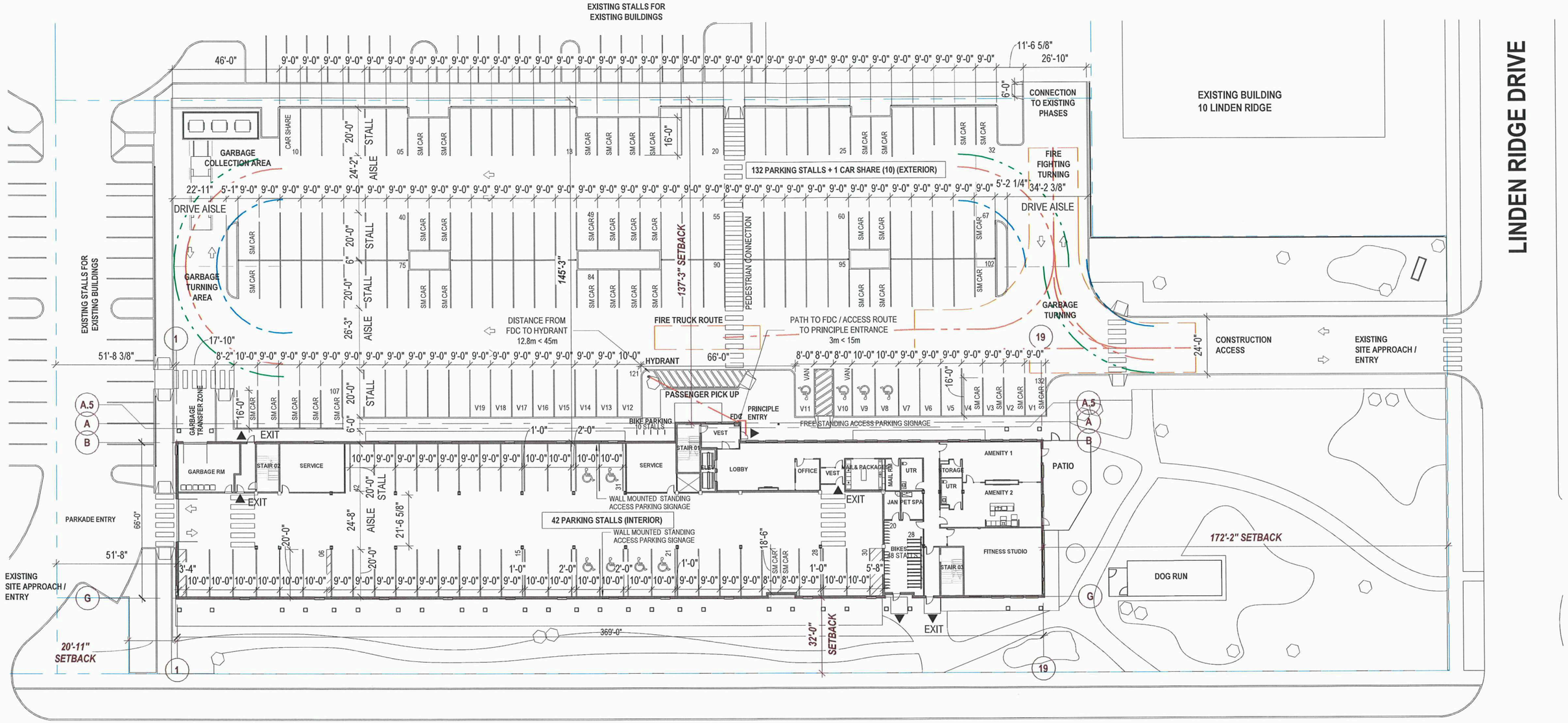

FALCON RIDGE DRIVE

1 PA - PARKING PLAN
1" = 40'-0"

SCHEDULE "A" page 3 of 12

To Zoning Agreement: DASZ 21/1998

By-Law No.: 7343/1998

Winnipeg

Zoning Officer	Jaspreet Bhullar	June 15, 2026
District Planner		June 16/26
Community Clerk		June 30/26
Approved for the Director of Planning, Property and Development		

N

PRELIMINARY DRAWING ONLY
NOT TO BE USED FOR CONSTRUCTION

BLDG architecture office inc.
3-692 Osborne Street
Winnipeg, Manitoba
Canada, R3L 2B9
T: 204.417.6884
E: info@bldgoffice.com

PROJECT
FALCON RIDGE
SITE PLAN - PARKING
Address
DWG BY BLDG REV'D BY KS
DATE 01/16/2026
SCALE 1" = 40'-0"
PROJECT NO. 2025_18
DRAWING NO. **PA05**

*Please note: Approved plans are subject to any amendments or conditions made by Community Committee.

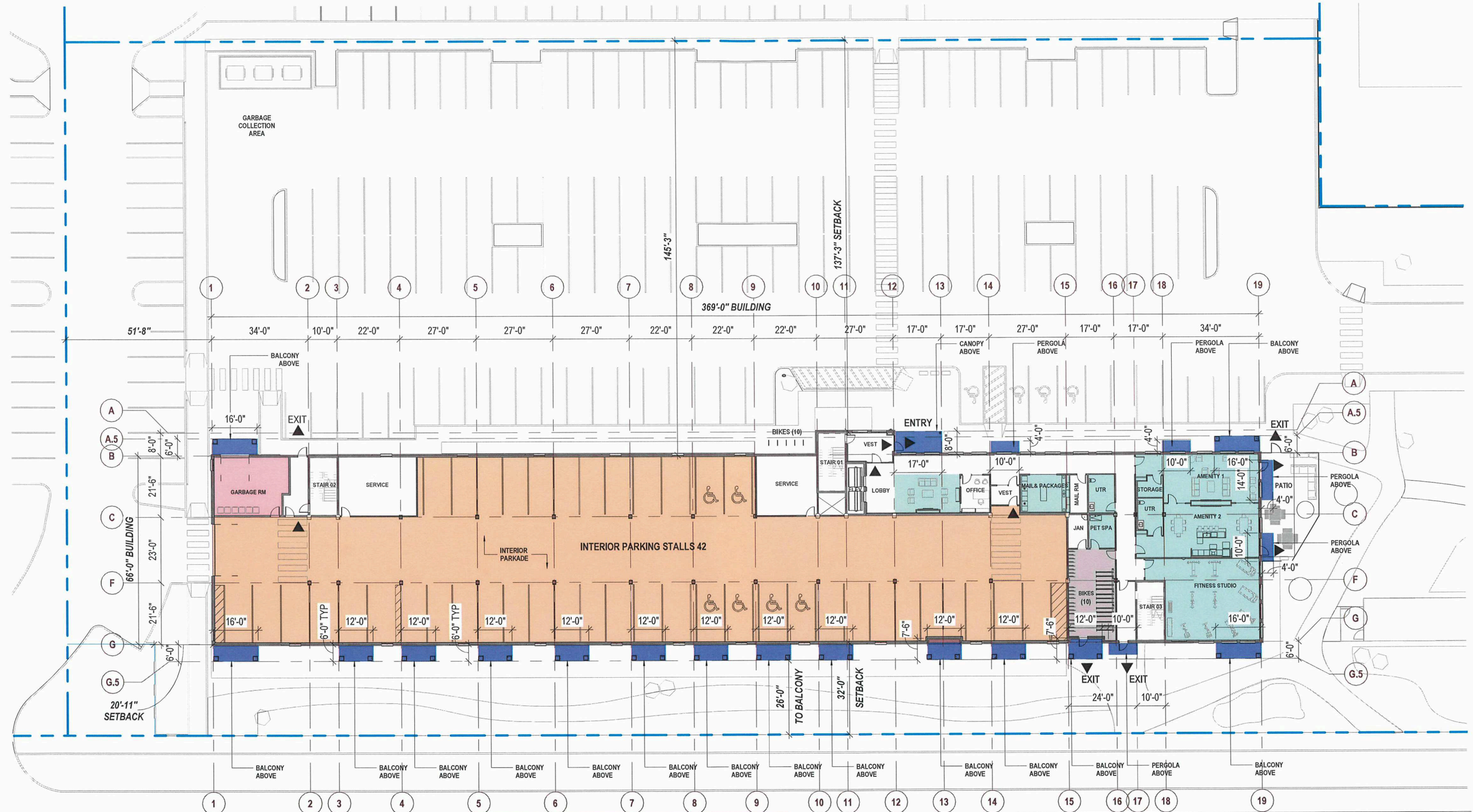

1 PA LEVEL 01 FLOOR PLAN

1/32" = 1'-0"

PROJECTIONS HIGHLIGHTED IN PURPLE

SCHEDULE "A" page 4 of 12

To Zoning Agreement: DASZ 21/1998

By-Law No.: 7343/1998

Winnipeg

Zoning Officer	Jaspreet Bhullar	June 15, 2026
District Planner		June 19/26
Community Clerk		June 30/26
Approved for the Director of Planning, Property and Development		

N

PRELIMINARY DRAWING ONLY

NOT TO BE USED FOR CONSTRUCTION

BLDG architecture office inc.

3-692 Osborne Street
Winnipeg, Manitoba
Canada, R3L 2B9

T: 204.417.6884
E: info@bldgoffice.com

PROJECT
FALCON RIDGE
LEVEL 01 FLOOR PLAN
Address

DWG BY BLDG REV'D BY KS

DATE 01/16/2026

SCALE 1/32" = 1'-0"

PROJECT NO. 2025_18

DRAWING NO. **PA06**

*Please note: Approved plans are subject to any amendments or conditions made by Community Committee.



1 PA ELEVATION 1 - NORTH
1" = 30'-0"

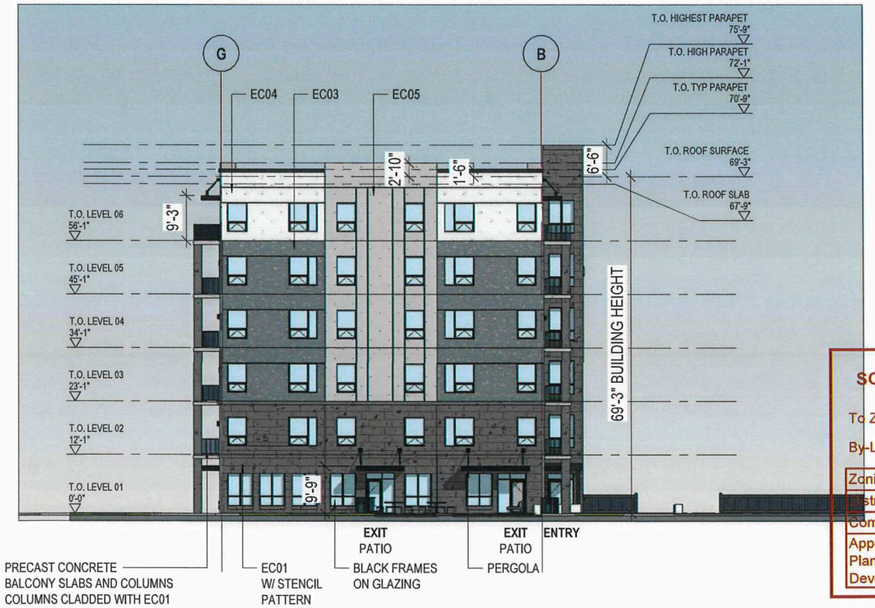

2 PA ELEVATION 2 - EAST
1" = 30'-0"

EIFS CLADDING

EC01 SPECIALTY FINISH: DARK TONE

EC02 SPECIALTY FINISH: LIGHT TONE

EC03 SPECIALTY FINISH: MEDIUM TONE

EC04 STANDARD FINISH: LIGHT TONE

EC05 STANDARD FINISH: MEDIUM TONE

**REFER TO PROPOSED EXTERIOR COLOUR PALETTE*

1

BUILDING

2

KEYPLAN

SCHEDULE "A" page 5 of 12

To Zoning Agreement: DASZ 21/1998

By-Law No.: 7343/1998

Winnipeg

Zoning Officer	Jaspreet Bhullar	June 15, 2026
District Planner		June 16/26
Community Clerk		June 30/26
Approved for the Director of Planning, Property and Development		

PRELIMINARY DRAWING ONLY

NOT TO BE USED FOR CONSTRUCTION

BLDG architecture office inc.
3-692 Osborne Street
Winnipeg, Manitoba
Canada, R3L 2B9
T: 204.417.5884
E: info@bldgoffice.com

PROJECT
FALCON RIDGE
EXTERIOR ELEVATIONS
Address

DWG BY BLDG REV'D BY KS

DATE 01/16/2026

SCALE As indicated

PROJECT NO. 2025_18

DRAWING NO. **PA21**

*Please note: Approved plans are subject to any amendments or conditions made by Community Committee.



3 PA ELEVATION 3 - SOUTH

1" = 30'-0"

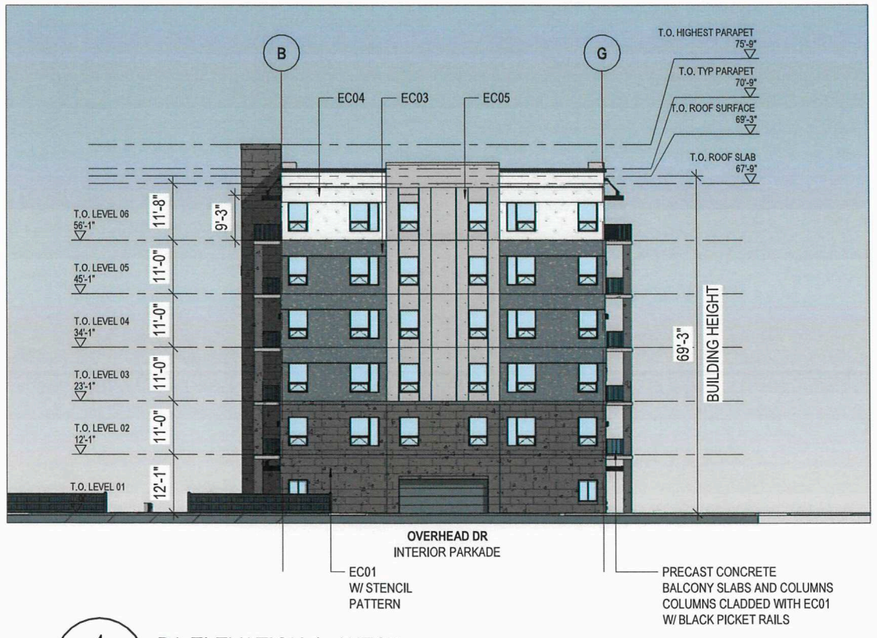

4 PA ELEVATION 4 - WEST

1" = 30'-0"

EIFS CLADDING

EC01 SPECIALTY FINISH: DARK TONE

EC02 SPECIALTY FINISH: LIGHT TONE

EC03 SPECIALTY FINISH: MEDIUM TONE

EC04 STANDARD FINISH: LIGHT TONE

EC05 STANDARD FINISH: MEDIUM TONE

**REFER TO PROPOSED EXTERIOR COLOUR PALETTE*

4



KEYPLAN

3

SCHEDULE "A" page 6 of 12

To Zoning Agreement: DASZ 21/1998

By-Law No.: 7343/1998

Winnipeg

Zoning Officer	Jaspreet Bhullar	June 15, 2026
District Planner		June 15/26
Community Clerk		June 30/26
Approved for the Director of Planning, Property and Development		

PRELIMINARY DRAWING ONLY

NOT TO BE USED FOR CONSTRUCTION

BLDG architecture office inc.

3-692 Osborne Street
Winnipeg, Manitoba
Canada, R3L 2B9

T: 204.417.6884
E: info@bldgoffice.com

PROJECT
FALCON RIDGE
EXTERIOR ELEVATIONS
Address

DWG BY BLDG REV'D BY KS

DATE 01/16/2026

SCALE As indicated

PROJECT NO. 2025_18

DRAWING NO. **PA22**

*Please note: Approved plans are subject to any amendments or conditions made by Community Committee.

PROPOSED LANDSCAPE PLANTING



SHRUB TYPE 01
DWARF MUGO PINE



SHRUB TYPE 02
PYGMY CARAGANA



SHRUB TYPE 03
KARL FOERSTER GRASS



SHRUB TYPE 04
CALGARY CARPET JUNIPER



SOFT SURFACES AND HARD SURFACES



TREE TYPE 01
AMUR MAPLE

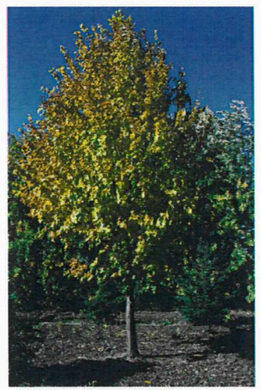

TREE TYPE 02
HARVEST GOLDEN LINDEN



TREE TYPE 03
JAPANESE TREE LILAC

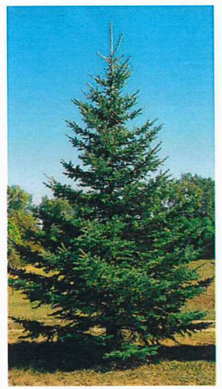

TREE TYPE 04
BLACK HILLS SPRUCE

SCHEDULE "A" page 7 of 12

To Zoning Agreement: DASZ 21/1998

By-Law No.: 7343/1998

Winnipeg

Zoning Officer	Jaspreet Bhullar	June 15, 2026
District Planner		June 14/26
Community Clerk		June 30/26
Approved for the Director of Planning, Property and Development		

*Please note: Approved plans are subject to any amendments or conditions made by Community Committee.

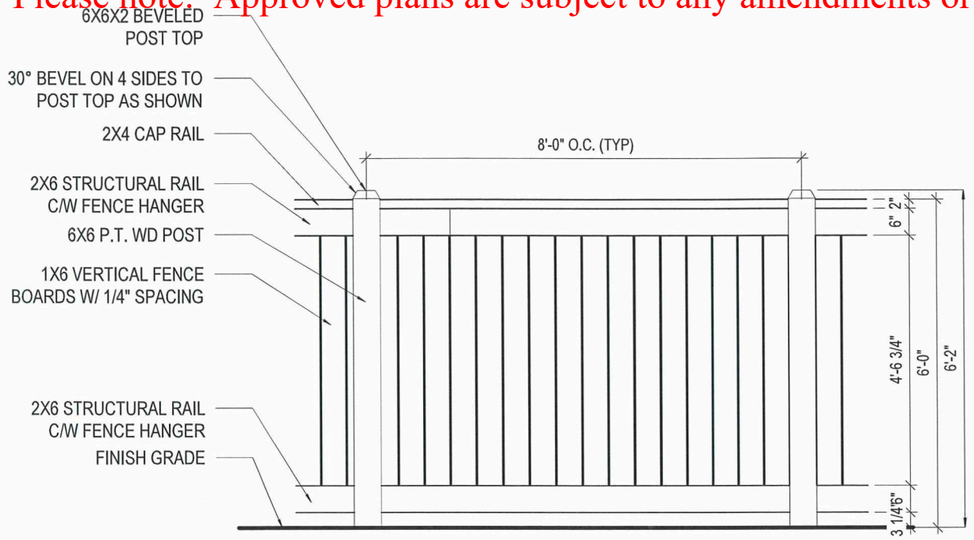

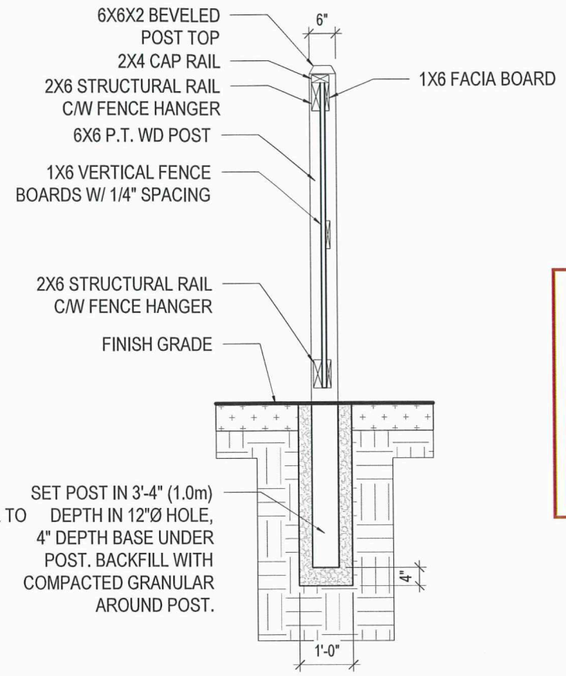

NOTES:
1. ALL FASTENINGS AND HARDWARE TO BE GALVANIZED OR ZINC PLATED AND ARE INCIDENTAL TO THE CONSTRUCTION OF THE FENCE.
2. ALL WOOD TO BE NO.1 GRADE PRESSURE TREATED.
3. ALL LUMBER SIZES SHOWN ARE NOMINAL.

1 FENCE DETAILS - 6' H

3/8" = 1'-0"

SCHEDULE "A" page 8 of 12

To Zoning Agreement: DASZ 21/1998

By-Law No.: 7343/1998

Winnipeg

Zoning Officer	Jaspreet Bhullar	June 15, 2026
District Planner		June 19/26
Community Clerk		June 30/26
Approved for the Director of Planning, Property and Development		

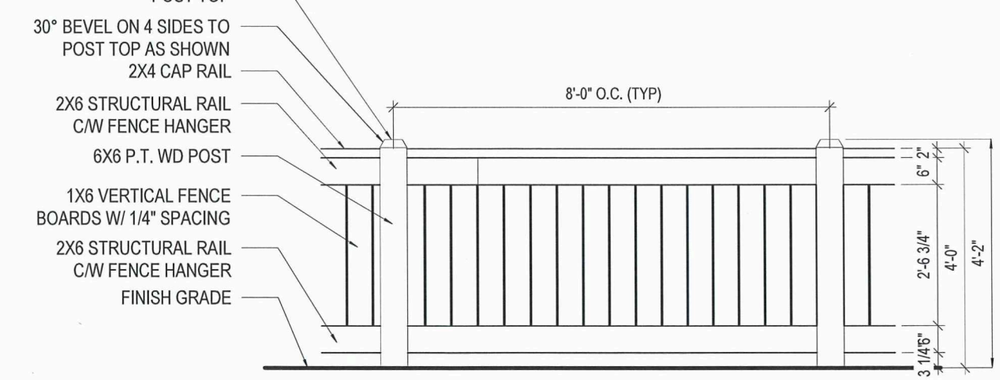

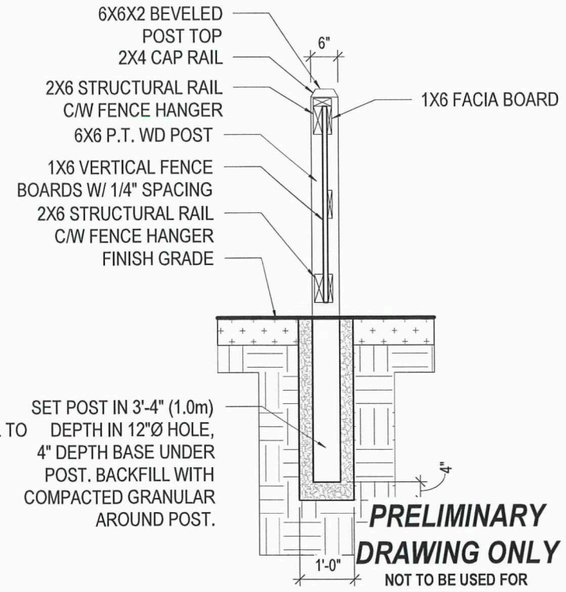

NOTES:
1. ALL FASTENINGS AND HARDWARE TO BE GALVANIZED OR ZINC PLATED AND ARE INCIDENTAL TO THE CONSTRUCTION OF THE FENCE.
2. ALL WOOD TO BE NO.1 GRADE PRESSURE TREATED.
3. ALL LUMBER SIZES SHOWN ARE NOMINAL.

2 FENCE DETAILS - 4' H

3/8" = 1'-0"

PRELIMINARY DRAWING ONLY

NOT TO BE USED FOR CONSTRUCTION

BLDG architecture office inc.
3-692 Osborne Street
Winnipeg, Manitoba
Canada, R3L 2B9
T: 204.417.6884
E: info@bldgoffice.com

PROJECT
FALCON RIDGE
LANDSCAPE DETAILS
Address

DWG BY BLDG REV'D BY KS

DATE 04/27/2026

SCALE 3/8" = 1'-0"

PROJECT NO. 2025_18

DRAWING NO. **PA34**

*Please note: Approved plans are subject to any amendments or conditions made by Community Committee.

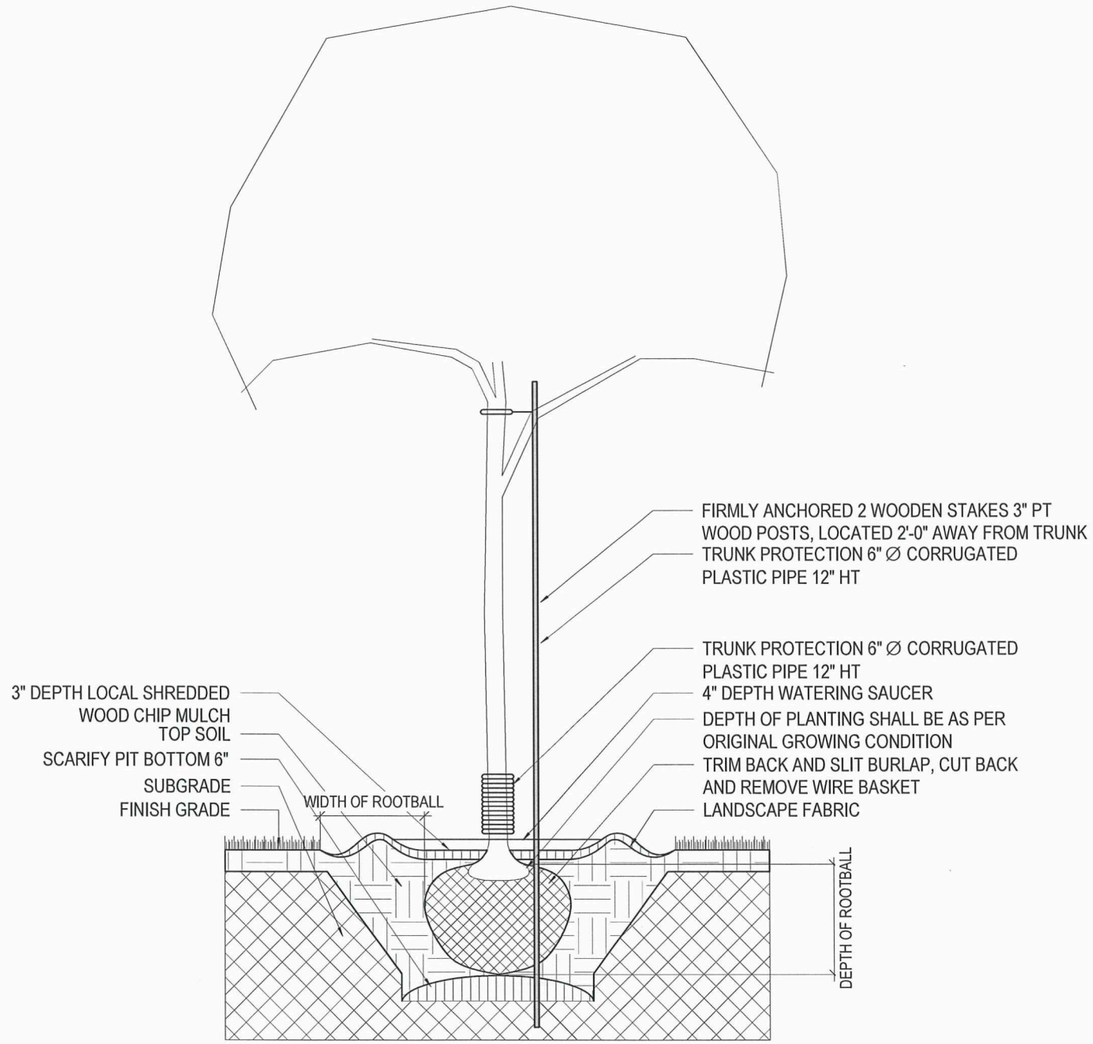

1 TYPICAL TREE PLANTING DETAIL
3/8" = 1'-0"

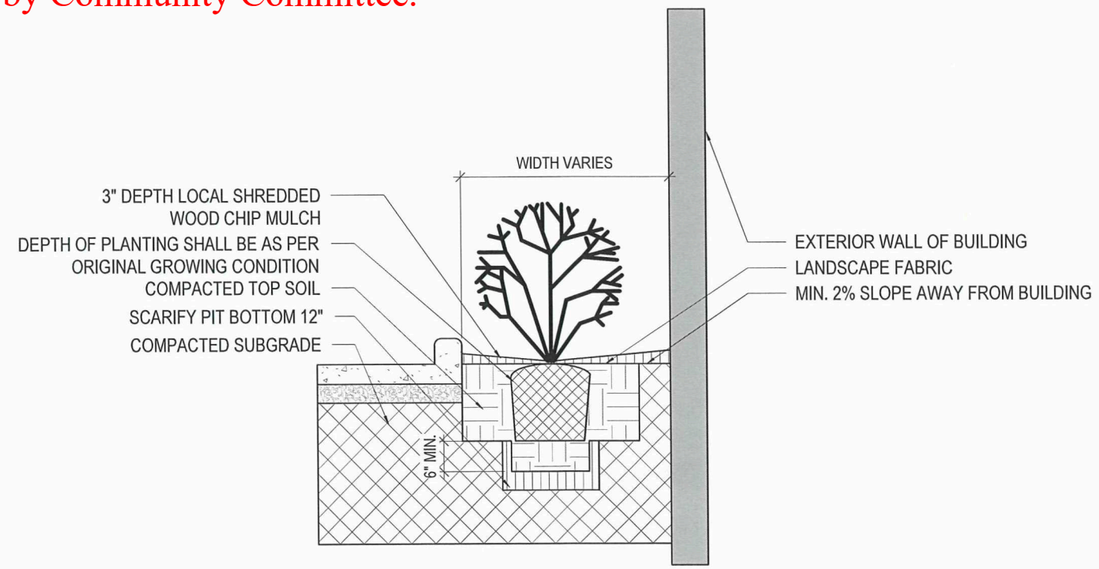

2 SHRUB BED IN CONC SIDEWALK
3/8" = 1'-0"

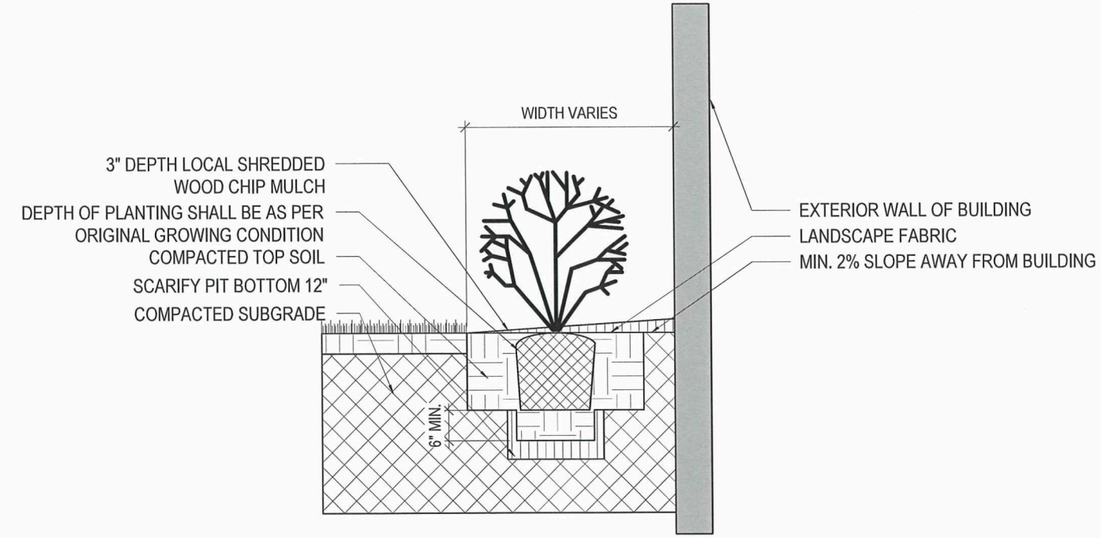

3 SHRUB BED IN SOFT LANDSCAPE
3/8" = 1'-0"

SCHEDULE "A" page 9 of 12

To Zoning Agreement: DASZ 21/1998

By-Law No.: 7343/1998

Winnipeg

Zoning Officer	Jaspreet Bhullar	June 15, 2026
District Planner		June 14/26
Community Clerk		June 30/26
Approved for the Director of Planning, Property and Development		

PRELIMINARY DRAWING ONLY
NOT TO BE USED FOR CONSTRUCTION

BLDG architecture office inc.
3-692 Osborne Street
Winnipeg, Manitoba
Canada, R3L 2B9
T: 204.417.6884
E: info@bldgoffice.com

PROJECT
FALCON RIDGE
LANDSCAPE DETAILS
Address
DWG BY BLDG REV'D BY KS
DATE 01/16/2026
SCALE 3/8" = 1'-0"
PROJECT NO. 2025_18
DRAWING NO. **PA33**

*Please note: Approved plans are subject to any amendments or conditions made by Community Committee.

GENERAL NOTES:

1. CONTRACTOR TO CONFIRM ALL DIMENSIONS AND REPORT ANY DISCREPANCIES TO CONTRACT ADMINISTRATOR PRIOR TO CONSTRUCTION.
2. LAYOUT TO BE APPROVED BY CONTRACT ADMINISTRATOR PRIOR TO ANY CONSTRUCTION OR REMOVALS.
3. ALL DIMENSIONS IN IMPERIAL UNLESS NOTED OTHERWISE.
4. REFER TO CIVIL DRAWINGS FOR LOCATION OF ALL CATCH BASINS, SITE GRADING, ETC; LAYOUT TO BE APPROVED BY GC.
5. LOCATION OF UTILITIES SHOWN FOR ILLUSTRATION ONLY. CONTRACTOR MUST CONTACT ALL UTILITIES REGARDING RULES FOR WORKING IN THE AREA OF THE UTILITIES PRIOR TO COMMENCEMENT OF ANY WORK. CONTRACTOR MUST CONFIRM LOCATION OF ALL UTILITIES PRIOR TO CONSTRUCTION.
6. ALL EXISTING ROADS, SIDEWALKS, CURBS, FENCING, PAVING, SODDED BOULEVARD, AND APPROACHES, ETC. TO REMAIN TO BE PROTECTED DURING CONSTRUCTION TO THE CITY OF WINNIPEG STANDARDS AT THE CONTRACTORS OWN COSTS.
7. ALL EXISTING TREES, SHRUB BEDS, MULCH BEDS, AND SOD TO REMAIN TO BE PROTECTED DURING CONSTRUCTION TO CITY OF WINNIPEG STANDARDS. AREAS DAMAGED DURING CONSTRUCTION TO BE REPAIRED TO CITY OF WINNIPEG STANDARDS AT THE CONTRACTORS OWN COSTS.
8. CONTRACTOR IS RESPONSIBLE FOR ALL EXCAVATIONS, REMOVALS, DISPOSAL, AND ROUGH GRADING AS REQUIRED TO CONSTRUCT ALL WORKS AS SHOWN ON PLAN, DETAILS, AND SPECIFICATIONS.
9. FILL ALL HOLES AND LOW AREAS TO DESIGN SUBGRADE WITH COMPACTED FILL (SUITABLE TO SURFACE FINISH), FOR SODDED/PLANTED AREAS USE COMPACTED CLEAN EARTH FILL SUITABLE FOR PLANT GROWTH. FOR PAVED AREAS USE COMPACTED GRANULAR BASE (REFER TO GEOTECHNICAL REPORT AND SPECIFICATIONS).
10. ALL TREES TO BE RETAINED SHALL BE PROTECTED TO CITY OF WINNIPEG STANDARDS.
11. AREAS WITH TOPSOIL AND SOD SHALL HAVE 6" EXCAVATED DEPTH PRIOR TO PLACING CLEAN EARTH FILL AND SPECIFIED DEPTH OF TOPSOIL.

PLANTING NOTES:

1. LOCATION OF ALL PLANT MATERIAL TO BE MARKED OUT ON SITE AND APPROVED BY CONTRACT ADMINISTRATOR PRIOR TO PLANTING.
2. TREE SPACING, UNLESS NOTED OTHERWISE - DECIDUOUS TREES: 6.0m MIN.; CONIFEROUS TREES: 3.0m MIN.
3. SHRUB SPACING, UNLESS NOTED OTHERWISE - DECIDUOUS SHRUBS: 600mm O.C.; CONIFEROUS SHRUBS: 750mm O.C.
4. ALL PLANT MATERIAL TO BE BEST QUALITY. PLANT MATERIAL TO BE REVIEWED ON SITE BY CONTRACT ADMINISTRATOR AND ARCHITECT PRIOR TO PLANTING. PLANTS NOT ACCEPTABLE ARE TO BE REPLACED AND NEW PLANTS APPROVED PRIOR TO PLANTING. REPLACEMENTS ARE AT THE CONTRACTOR'S OWN COST.
5. ALL PLANTING EXCAVATIONS ARE TO BE REVIEWED AND APPROVED BY CONTRACT ADMINISTRATOR AND ARCHITECT PRIOR TO PLACEMENT OF DRAINAGE COURSE, FILTER FABRIC AND/OR SOIL.
6. ALL PLANTING BEDS (SHRUB BED OR MULCH BED) WITH TREES MUST HAVE MINIMUM 900mm DEPTH PLANTING SOIL FOR THE ENTIRE AREA OF THE BED.

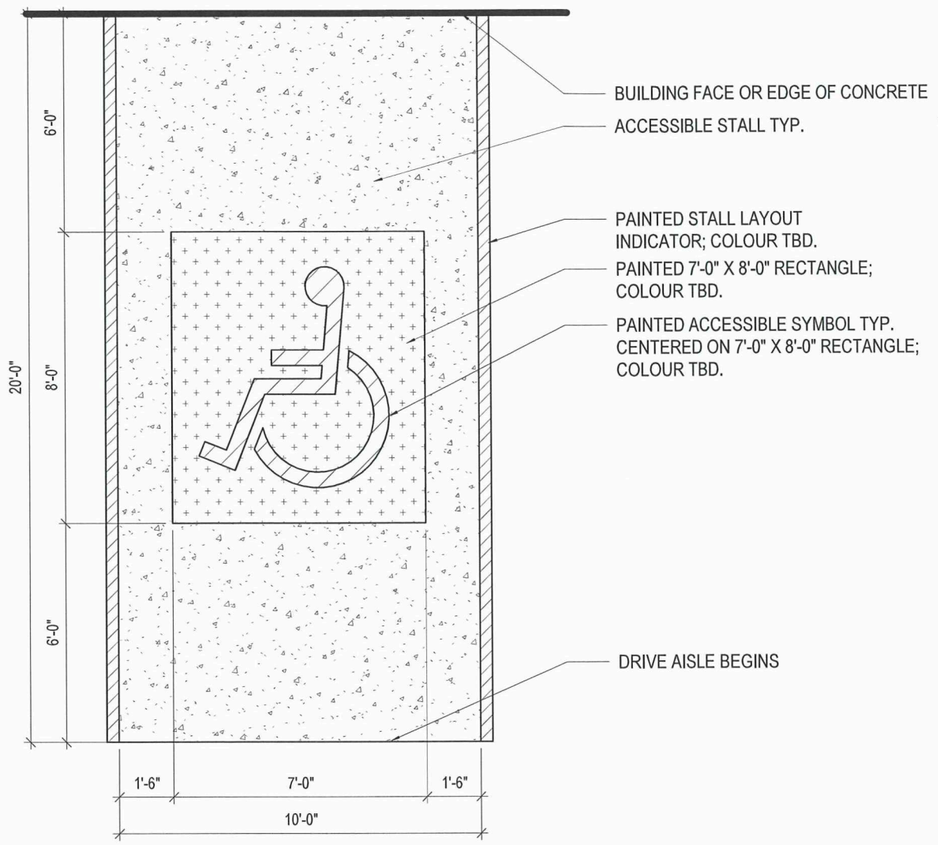

1 ACCESSIBLE PARKING STALL
1/4" = 1'-0"

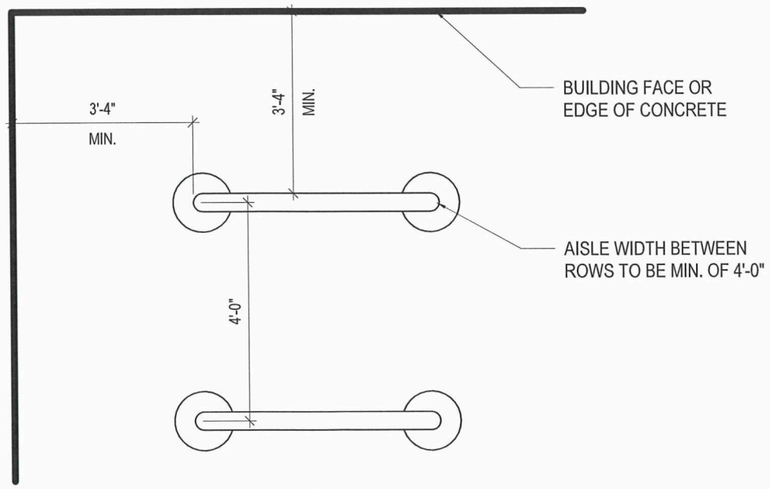

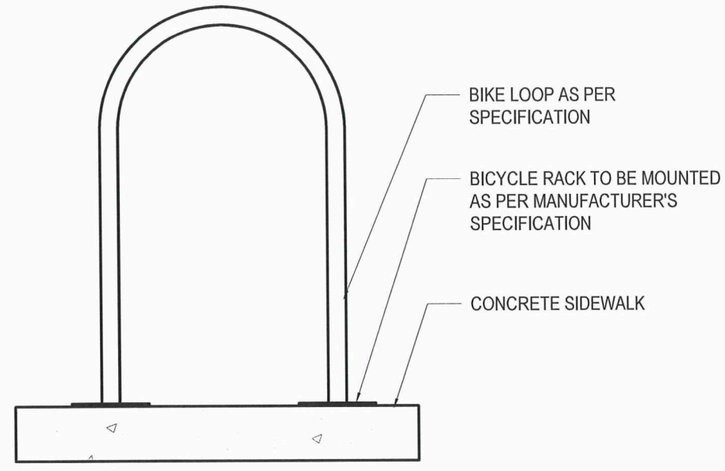

2 TYPICAL BIKE RACK
3/8" = 1'-0"

SCHEDULE "A" page 10 of 12
To Zoning Agreement: DASZ 21/1998
By-Law No.: 7343/1998
Winnipeg

Zoning Officer	Jaspreet Bhullar	June 15, 2026
District Planner		June 19/26
Community Clerk		June 30/26
Approved for the Director of Planning, Property and Development		

PRELIMINARY DRAWING ONLY
NOT TO BE USED FOR CONSTRUCTION

BLDG architecture office inc.
3-692 Osborne Street
Winnipeg, Manitoba
Canada, R3L 2B9
T: 204.417.6884
E: info@bldgoffice.com

PROJECT
FALCON RIDGE
LANDSCAPE DETAILS
Address
DWG BY BLDG REV'D BY KS
DATE 04/27/2026
SCALE As indicated
PROJECT NO. 2025_18
DRAWING NO. **PA31**

*Please note: Approved plans are subject to any amendments or conditions made by Community Committee.

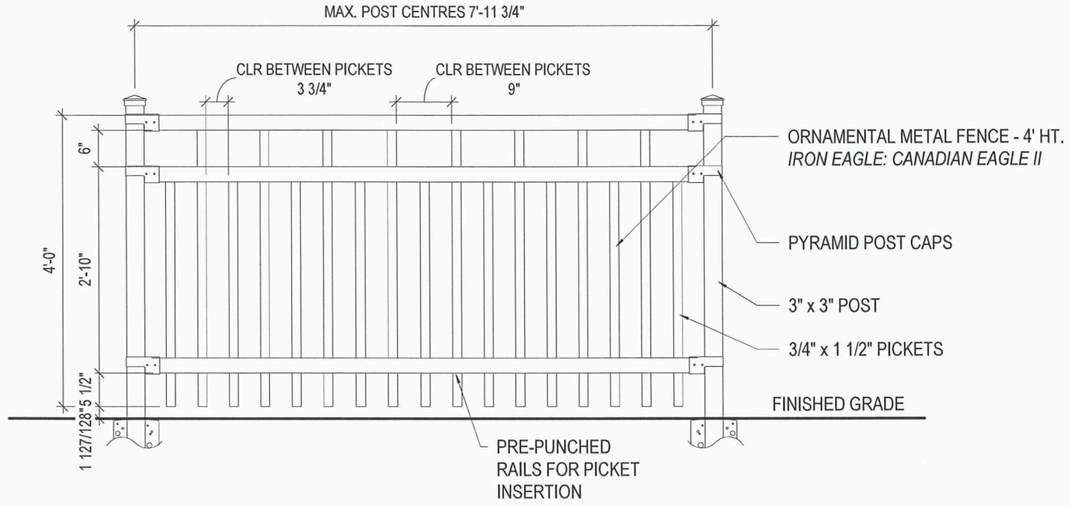

1 ORNAMENTAL FENCE DETAILS - 4' H — AT PATIO

1/2" = 1'-0"

SCHEDULE "A" page 11 of 12

To Zoning Agreement: DASZ 21/1998

By-Law No.: 7343/1998

Winnipeg

Zoning Officer	Jaspreet Bhullar	June 15, 2026
District Planner		June 14/26
Community Clerk		June 30/26
Approved for the Director of Planning, Property and Development		

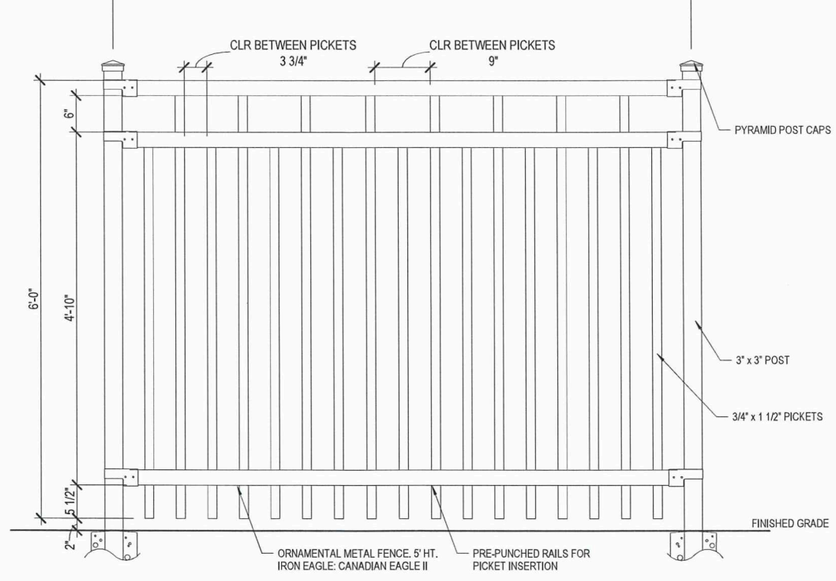

2 ORNAMENTAL FENCE DETAILS - 6' H — DOG RUN

1/2" = 1'-0"

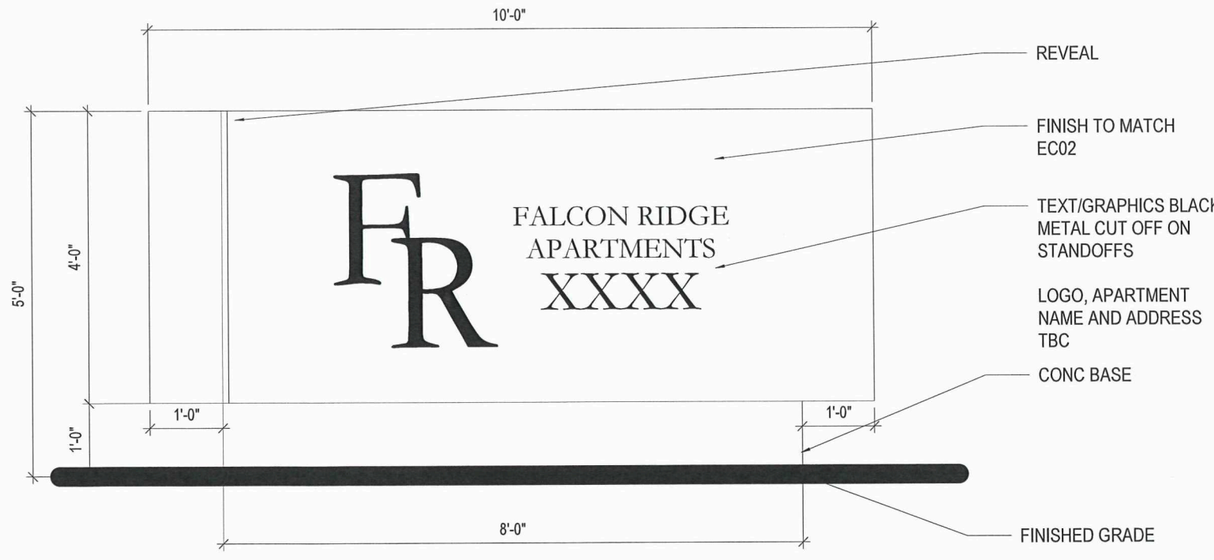

3 ENTRY SIGNAGE MONUMENT

1/2" = 1'-0"

PRELIMINARY DRAWING ONLY

NOT TO BE USED FOR CONSTRUCTION

BLDG architecture office inc.
3-692 Osborne Street
Winnipeg, Manitoba
Canada, R3L 2B9
T: 204.417.6884
E: info@bldgoffice.com

PROJECT
FALCON RIDGE
LANDSCAPE DETAILS
Address

DWG BY BLDG REV'D BY KS

DATE 04/27/2026

SCALE 1/2" = 1'-0"

PROJECT NO. 2025_18

DRAWING NO. **PA35**

*Please note: Approved plans are subject to any amendments or conditions made by Community Committee.

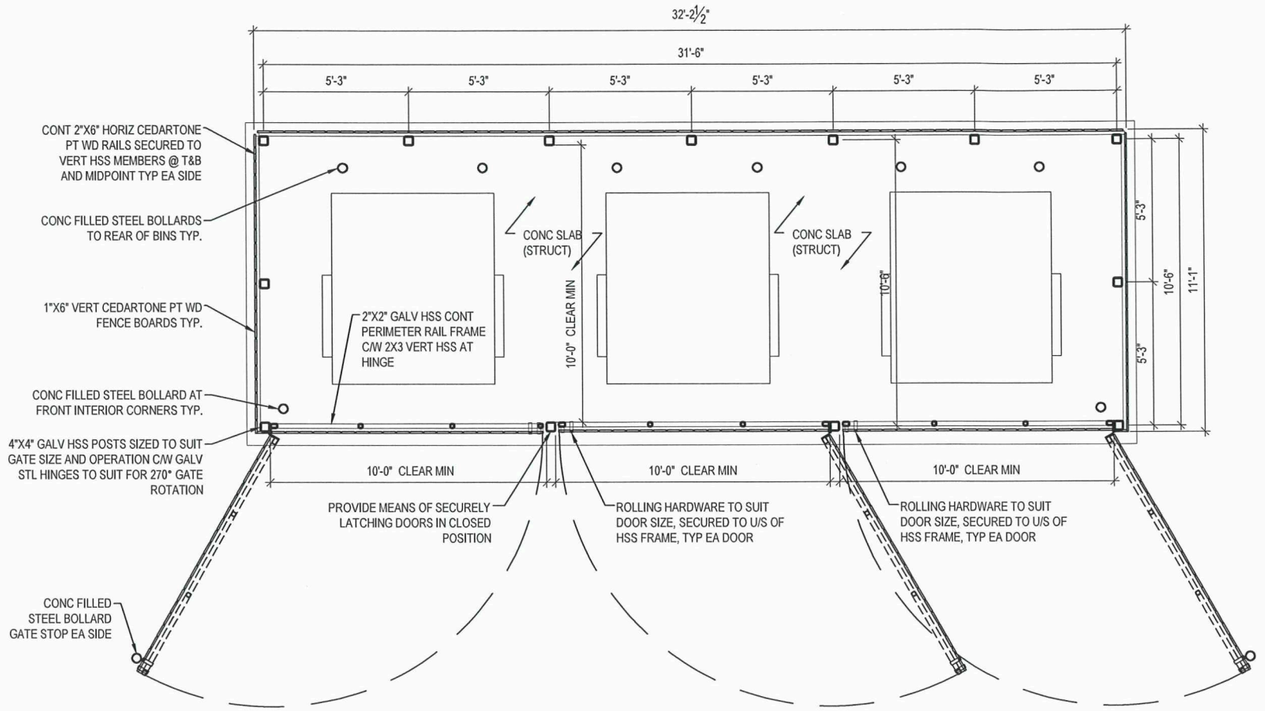

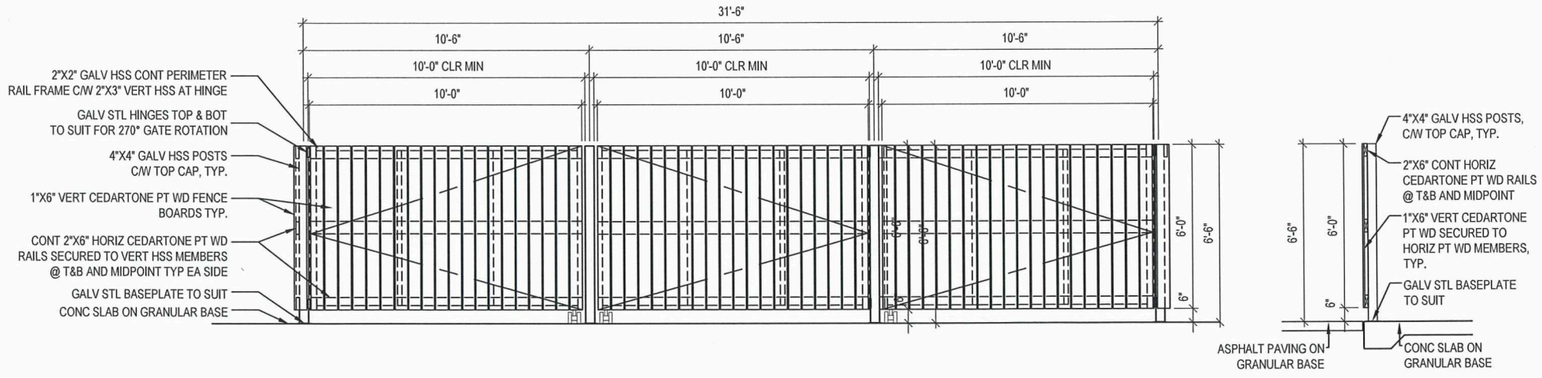

1 / - L01 GARBAGE ENCLOSURE PLAN & ELEVATION

3/16" = 1'-0"

SCHEDULE "A" page 12 of 12

To Zoning Agreement: DASZ 21/1998

By-Law No.: 7343/1998

Winnipeg

Zoning Officer	Jaspreet Bhullar	June 15, 2026
District Planner	SKL	June 19/26
Community Clerk		June 30/26
Approved for the Director of Planning, Property and Development		

PRELIMINARY
DRAWING ONLY
NOT TO BE USED FOR CONSTRUCTION
(REMOVE WHEN DRAWING IS FINAL)

BLDG
architecture office inc.
3 - 692 Osborne Street
Winnipeg, Manitoba
Canada, R3L 2B9
T: 1 204 417 6884
E: info@bldgoffice.com

PROJECT
FALCON RIDGE
LANDSCAPE DETAILS

DRAWN BLDG REV'D KS
DATE 04/27/2026
SCALE

PROJECT NO. 2025 18
DRAWING NO. PA37